SYSTEM	TASK				Specification	Record/Reading
	MAIN HOIST FUNCTION TEST (Need Crane Mech to verify each platform)				OEM Manual	
	Boom Angle : 60 Degree (Recommend or as applicable)	UP	Cracking pressure	RECORD	OEM Manual	100 PSI
			Full Speed Pressure	RECORD	OEM Manual	600 PSI
		DOWN	Cracking pressure	RECORD	OEM Manual	700 PSI
			Full Speed Pressure	RECORD	OEM Manual	1200 PSI
	AUX HOIST FUNCTION TEST (Need Crane Mech to verify each platform)				OEM Manual	
	Boom Angle : 60 Degree (Recommend or as applicable)	UP	Cracking pressure	RECORD	OEM Manual	100 PSI
			Full Speed Pressure	RECORD	OEM Manual	400 PSI
		DOWN	Cracking pressure	RECORD	OEM Manual	600 PSI
			Full Speed Pressure	RECORD	OEM Manual	1200 PSI
	SWING FUNCTION TEST (Need Crane Mech to verify each platform)				OEM Manual	
	Boom Angle : 60 Degree (Recommend or as applicable)	LEFT	Cracking pressure	RECORD	OEM Manual	200 PSI
			Full Speed Pressure	RECORD	OEM Manual	800 PSI
		RIGHT	Cracking pressure	RECORD	OEM Manual	200 PSI
			Full Speed Pressure	RECORD	OEM Manual	600 PSI
Electrical system, Crane Boom Lighting and red obstruction light	Check the electrical junction boxes, wires and connections for deterioration, desiccant bags, (replace as required)				Industry Standard	(✓) YES ( ) NO
	Check the condition of the grounding and lighting protection system.				Company Spec/Standard	(✓) YES ( ) NO
	Visually inspect boom floodlight and light guards for loose, missing, corroded				Company Spec/Standard	(✓) YES ( ) NO
	Check condition pipe support , U-bolt ,nuts of boom floodlight and Electric slipring for loose , missing , corroded				Company Spec/Standard	(✓) YES ( ) NO
	Check Electric slipring/swivel for 360° continuous rotation				OEM Munnal	(✓) YES ( ) NO
	Check Water ingress, condensation in electric slipring, red obstruction light and boom floodlight				OEM Munnal	(✓) YES ( ) NO
	Check feely movement and lubricate of boom floodlight				OEM Munnal	(✓) YES ( ) NO
	With generator in operation, intergize all lights to unsure proper function.				API RP 2D	(✓) YES ( ) NO
	Check condition of crane boom lighting and safety net is secured with strong point. * **Safety net should be replace 24 months after installation (2 year)***			Last installation date _____	Company Spec/Standard	(✓) YES ( ) NO
	Check function of crane sound signal				Company Spec/Standard	(✓) YES ( ) NO ( ) N/A
	Check function of crane boom lighting at boom upper section				Company Spec/Standard	(✓) YES ( ) NO ( ) N/A
	Check function of crane boom lighting at boom lower section				Company Spec/Standard	(✓) YES ( ) NO ( ) N/A
	Check function of crane boom lighting at winch skid				Company Spec/Standard	(✓) YES ( ) NO ( ) N/A
	Check function of crane boom lighting at crane cabin				Company Spec/Standard	(✓) YES ( ) NO ( ) N/A
	Check function becon light at boom tip				Company Spec/Standard	(✓) YES ( ) NO ( ) N/A
	Inspection wire rope guide & Roller assembly				Company Spec/Standard	(✓) YES ( ) NO
	Visually inspect red obstruction light pipe support, u-bolts, nuts connection to hand rail for loose, missing, corroded				Company Spec/Standard	(✓) YES ( ) NO
	Visually inspect safety sling attached to the red obsruction light and its base for loose, missing, corroded				Company Spec/Standard	(✓) YES ( ) NO
	Visually inspect red obstruction light function. The light is designed to turn on all the time.				Company Spec/Standard	(✓) YES ( ) NO
Operator Control Station	Check general condition of control panel, bolts, paint security, etc.				API RP 2D	(✓) YES ( ) NO
	Determine if there is a serviceable fire extinguisher in the vicinity of the crane				Company Spec/Standard	(✓) YES ( ) NO
	Determine if correct load chart is in use and easily visible for operator				API RP 2D	(✓) YES ( ) NO
	Determine if charts, indicators and hand signal chart are in the cabling and firmly attached				API RP 2D	(✓) YES ( ) NO
	Determine if angle/radius indicator plate is easily visible to operator and is moving freely.				API RP 2D	(✓) YES ( ) NO
	Check condition of control levers and determine if they "dead-man" back to the neutral position.				API RP 2D	(✓) YES ( ) NO
	Check condition of pressure gauges.				API RP 2D	(✓) YES ( ) NO
	Check proper control labels are firmly installed, completely legible and properly labeled				API RP 2D	(✓) YES ( ) NO
	Check controls for freedom-of-movement				API RP 2D	(✓) YES ( ) NO
	Check condition , Leak, freely moement of Dynamic swing break system *** Note; if HYD Oil loose in CYD reservoir must be refill*				OEM Manual	(✓) YES ( ) NO
	Check condition , Leak, freely moement of Accelerate System *** Note; if HYD Oil loose in CYD reservoir must be refill*				OEM Manual	(✓) YES ( ) NO
	Check all safety glass and rubber seal for proper condition				API RP 2D	(✓) YES ( ) NO ( ) N/A
	Function Test Horn. Note;.....Ok.....				Industry Standard	(✓) YES ( ) NO ( ) N/A
	Ensure PRE/POST Check List and Pocket Manual in the cabin. Note:.....Ok.....				Company Standard	(✓) YES ( ) NO ( ) N/A
Load Indicator System	Visual check on fittings and connections for leaks. Fix leak if any. Note;.....Good.....				OEM Manual	( ) YES ( ) NO
	Should any leaks exist, stop leak and recharge system, refer to maintenance manual				OEM Manual	(✓) YES ( ) NO
	Change and flushing Load cell fluid.				OEM Manual	(✓) YES ( ) NO
	Check general condition of tubbing, hoses, pins bolts, paint, etc.				Industry Standard	(✓) YES ( ) NO
	Insure load cell is free of obstructions				OEM Manual	(✓) YES ( ) NO
	Check condition of gauge(s) face and clean glass as required.				OEM Manual	(✓) YES ( ) NO
	Check the scale's operation and weighing accuracy. (Main Hoist) Remark : Maximum variance +/- 2% Note;.....Ok.....				Company Spec/Standard	(✓) YES ( ) NO ( ) N/A
	Check the scale's operation and weighing accuracy. (Aux. Hoist) Remark : Maximum variance +/- 2% Note;.....Ok.....				Company Spec/Standard	(✓) YES ( ) NO ( ) N/A
	Check the internal casting fluid of weight indicator. top up if required				Industry Standard	(✓) YES ( ) NO ( ) N/A
	Insure SWL tag matches ratings on the Crane Load Chart.				OEM Manual	(✓) YES ( ) NO ( ) N/A
	Insure Boom Length, matches the Crane Load Chart				OEM Manual	(✓) YES ( ) NO ( ) N/A
	Insure Boom Angle measurements and readings match the boom angle indicator.				OEM Manual	(✓) YES ( ) NO ( ) N/A
	Insure Boom Radius measurements indicate the distance from center line of the crane to the hook				OEM Manual	(✓) YES ( ) NO ( ) N/A
	Check Main load cell gap 1/4 (0.250) inch				OEM Manual	(✓) YES ( ) NO ( ) N/A
	Check Aux load cell gap 3/8(0.380) inch (Compression Load Cell Type)				OEM Manual	(✓) YES ( ) NO ( ) N/A
Pedestal & Structure	Visually check Pedestal for chipped/cracked paint, deformation, worn parts, dents, corroded areas, cracks weld, etc.				API RP 2D	(✓) YES ( ) NO
	Check water rain drain at pedestal must be not obstuct				Industry Standard	(✓) YES ( ) NO
	Check pin and cotter pin of pedestal missing , corrosion, wear, damage and exercise pin.				Industry Standard	(✓) YES ( ) NO

SYSTEM	TASK	Specification	Record/Reading
	Visually check Base - Plate connection and Base hoist Structure for chipped/cracked paint, deformation, worn parts, dents, corroded areas, cracks weld, etc.	API RP 2D	(✓) YES ( ) NO
	Check A fixed such as Handrial, Walkway, Grating, stationary structure without significant movement in response to waves and currents in normal operating conditions.	API RP 2C	(✓) YES ( ) NO
	Visually check and lubricate maintenance Jib. ***Note*** If on pedestal crane	OEM Manual	(✓) YES ( ) NO ( ) N/A
	Check maintenance jib is secure firmly. ***Note*** If on pedestal crane	OEM Manual	(✓) YES ( ) NO ( ) N/A
Box Boom & Luffing CYD	Check and Verify entire box boom and Boom CYD for loss of protective coating and corrosion. Note:.....	API RP 2D	(✓) YES ( ) NO
	Check and Verify entire box boom and Boom CYD for chipped/cracked paint, deformation, worn parts, dents, corroded areas, cracks, etc. Note:.....	API RP 2D	(✓) YES ( ) NO
	Check and Verify boom end connections, for bends, dents, corroded areas, cracked welds, and signs of mechanical damage, wear, etc. **any deviation should be reported**	API RP 2D	(✓) YES ( ) NO
	Check and Verify boom rest and wooden support to ensure it's in good condition	API RP 2D	(✓) YES ( ) NO
	Inspect pin and pin holes of Upper tank and Lower tank for excessive clearance	OEM Manual	(✓) YES ( ) NO
	BOOM CYLINDER PIN MAXIMUM TOLERANCE — 0.125 Inch (3mm)	Industry Standard	As found: ok
	Check BOOM CYLINDERS for proper operation and good condition	API RP 2D	(✓) YES ( ) NO
	Check Boom cylinder barrels and rods for leaks, mechanical damage and corrosion	Industry Standard	(✓) YES ( ) NO
	Check and measurement boom foot pin and connection pins for clearance	Industry Standard	(✓) YES ( ) NO
	BOOM FOOT PINS & BOOM BOX CONNECTER PIN TOLERANCE — 0.125 Inch (3mm)	Industry Standard	
	Boom Foot Pin Tolerance	Industry Standard	0.032 inch
	Boom Box Connecter Pin Tolerance	Industry Standard	0.029 inch
	Check connecting bolts of box boom loose, corrosion, wear, damage	OEM Manual	(✓) YES ( ) NO
	Lubricate boom foot pins and bushings	OEM Manual	(✓) YES ( ) NO
	Lubricate boom cylinder pins, bearings and bushings	OEM Manual	(✓) YES ( ) NO
	Boom function test angle/radius to correction **Note; The cylinder(s) mechanism shall be capable of elevating the boom from a minimum of zero degrees to the maximum recommended boom angle.	API RP 2C	(✓) YES ( ) NO
	Operation functional test and verify Boom Creeping down **Note; Test at angle 60°	Industry Standard	(✓) YES ( ) NO As found: Not creeping
Wire Rope	Determine if parts-of-line match parts of line on the load chart in the crane cabin.	API RP 2D	(✓) YES ( ) NO
	Determine if visible portion of wire rope adequately lubricated. If not lubricate wire rope	API RP 2D	(✓) YES ( ) NO
	For each layer of wire rope on drum, check that all rope is parallel and each crossover point at hoist flanges is correct	API RP 2D	(✓) YES ( ) NO
	The top layer of rope must not be lower to the flange tips 2.5 in for Smooth drum,2 in for groove drum or 2.5 times of wire rope diameter	API RP 2C	(✓) YES ( ) NO
	Inspect wire rope for, kinking, crushing, broken wires, necking down of rope diameter, worn outside wires, corroded or broken wires at end connection, cutting or unstringing.	API RP 2D	(✓) YES ( ) NO As found: Good
	NoteRunning Ropes of rotation-resistant construction used in the main or auxiliary Hoist: - Four (4) Randomly distributed broken wires within 30 rope diameter - Two (2) broken wires in one stand within 6 rope diameter	API RP2D Edition 7	(✓) YES ( ) NO As found: Good
	One valley break can indicate internal rope damage requiring close inspection of this section of the rope. When one or more valley breaks are found in one lay length the rope should be retired.	API RP2D Edition 7	(✓) YES ( ) NO As found: Good
	Reductions for the rope diameter, from initial wire rope dimensional measurements, in a nonworking area (an area away from the sheaves) compared to the lowest diameter of rope measured in three working areas (areas where the rope regularly goes over a sheave) of more than the following is observed: — 3/64 in. (0.047 in.) (1.2 mm) for diameters up to and including 3/4 in. (19.1 mm); — 1/16 in. (0.062 in.) (1.6 mm) for diameters of 7/8 in. to 1-1/8 in. (22.2 mm to 28.6 mm); — 3/32 in. (0.093 in.) (0.8 mm) for diameter of 1-1/4 in. to 1-1/2 in. (31.8 mm to 38.1 mm); — For rope diameters greater than 1-1/2 in., a 5 % diameter loss from baseline measurement. —Wear of one-third the original diameter of the outside individual wires.	API RP2D Edition 7	(✓) YES ( ) NO As found dimension: Good
	Increase in the length of an individual rope lay is observed. This increase in lay length and accompanying reduction in diameter can be caused by failure of the core. This can occur more readily in ropes or rotation-resistant construction.	API RP2D Edition 7	(✓) YES ( ) NO As found: Good
	-Inspection and Verify running and standing rope from heat effect **Note; Not more than 250°C -There is evidence of heat damage from any source (i.e. engine exhaust, flare towers, stress corrosion cracking, etc.). Heat can be generated by passing a rope over a frozen or non-turning sheave, contact with structural members of the crane, improperly grounded welding leads or lightning strikes	Industry Standard	(✓) YES ( ) NO As found: Good
	With the boom at the highest possible angle and the main load block or overhaul ball at the water level, ensure there is a minimum of 5 wraps of wire-rope remaining on the drums. Note: (Thai law, requires minimum of 2 wraps)	API SPEC 2C / Thai Law	(✓) YES ( ) NO
	Reference: - Running rope safety factor not less than 6 for wire rope that are running wire, (Thai law; Wire rope nominal breaking strength x number parts of line / Design factor 6) - Standing rope safety factor not less than 3.5 for wire rope that are stay cables, (Thai law)	Thai Law	(✓) YES ( ) NO ( ) N/A
	Measure and record nominal diameter of "running ropes"main and auxiliary (particularly on drum, equalizer sheave and at sockets, clips and dead end points) *****Nominal = several measurements added together divided by Number of measurements*****	API RP 2D	(✓) YES ( ) NO
	Inspect wire rope and record dimension.	API RP 2D	
	MAIN WIRE ROPE OD: — FULL DRUM	OEM Manual	0.642 inch
	MAIN WIRE ROPE OD: — HALF DRUM	OEM Manual	0.640 inch
	MAIN WIRE ROPE OD: — WATER LEVEL	OEM Manual	0.640 inch
	AUX WIRE ROPE OD: — FULL DRUM	OEM Manual	0.642 inch
	AUX WIRE ROPE OD: — HALF DRUM	OEM Manual	0.640 inch
	AUX WIRE ROPE OD: — WATER LEVEL	OEM Manual	0.638 inch
	Slip-Cut 1 meter of all ropes at the wedge socket and re-wedge to prevent rust inside of wedge socket (at outward end of rope, not on hoist drum) Dead end tail length is never less than 6 inches, or: - Standard 6 to 8 Strand wire rope is not less than 7 times the rope diameter - Rotation Resistant Wire Rope is not less than 20 times the rope diameter	Company Spec/Standard	(✓) YES ( ) NO
	U-bolt and Fist Grip Clips: Extreme care should be exercised to assure proper orientation of U-bolt clips. The U-bolt segment shall be in contact with the wire rope dead-end. The orientation, spacing, torquing, and number of all clips shall be in accordance with the crane manufacture's specifications.	API SPEC 2C	(✓) YES ( ) NO

SYSTEM	TASK	Specification	Record/Reading
	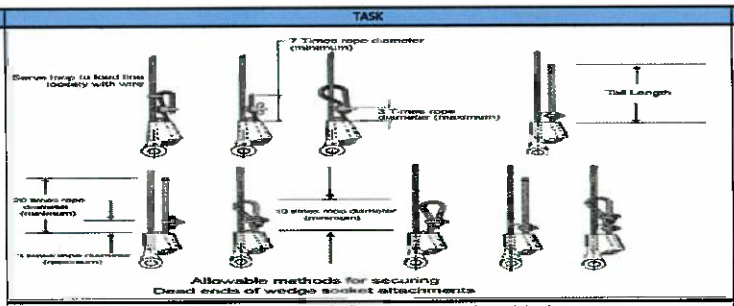 Allowable methods for securing Dead ends of wedge socket attachments	API SPEC 2C	Model ans Size wedge socket. Main hoist. Model..... Size.....5/8..... Aux.Hoist. Model..... Size.....5/8.....
	Verify that the wedge socket and wedge are the correct size for the rope in use and record the size	API SPEC 2C	(✓) YES ( ) NO
Sheaves & Bearings	Lubricate all sheave bearings.	API RP 2D	(✓) YES ( ) NO
	Visually inspect all sheaves and bushings for cracks, wear and deterioration	API RP 2D	(✓) YES ( ) NO As found.....04.....
	Visually inspect wire rope track of sheave for rope imprints, wear and deterioration. If damage exist sheave should be resurfaced or replaced.	API RP 2D	(✓) YES ( ) NO As found.....04.....
	Pins retained by snap rings, bolt lock shafts, plates lock should be checked for missing or loose for all	API RP 2D	(✓) YES ( ) NO
	Check wirerope guards and keepers for proper location and condition.	API RP 2D	(✓) YES ( ) NO
	Determine if wire rope is jumping the sheaves, by looking for signs of damage on the sheave brim	Industry Standard	(✓) YES ( ) NO
	Sheave Rope Profile for optimum Rope life the sheave groove profile should be correctly matched to the rope diameter	Industry Standard	(✓) YES ( ) NO
	Check rope sheave should be machine grooved to adepth of not less than 1.5 times the norminal diameter of the rope	Industry Standard	(✓) YES ( ) NO
	MAIN POINT SHEAVES: Note;.....	Industry Standard	No.1 (✓) YES ( ) NO No.2 (✓) YES ( ) NO
	AUX SHEAVES: Note;.....	Industry Standard	No.1 (✓) YES ( ) NO
	IDLER SHEAVES: Note;.....	Industry Standard	AUX. (✓) YES ( ) NO Main (✓) YES ( ) NO
	Pins for bronze bushing and straight roller bearing should have a running clearnace of .031 inch/ sheave of end play and should be adjusted accordingly.(count from left)	Industry Standard	(✓) YES ( ) NO
	MAIN POINT SHEAVES:	Industry Standard	Sheave No.1.....16..... inch Sheave No.2.....16..... inch
	AUX SHEAVES:	Industry Standard	Sheave No.1.....16..... inch
	IDLER SHEAVES:	Industry Standard	Sheave AUX.....16..... inch. Sheave Main.....16..... inch.
	Ensure the sheaves are aligned and the fleet angle is correct **Remark ; Wire rope User's Manual allows 2 degree on grooved winch drum, Smooth Drum should be not more than 1-1/2 degree	API RP 2D	(✓) YES ( ) NO
	Determine if wire rope size and sheave sizes/grooves are compatible and record size. Sheave pitch diameter (D) to nominal wire rope diameter (d) ratio (D/d) shall not be less than 18:1	API SPEC 2C	(✓) YES ( ) NO
	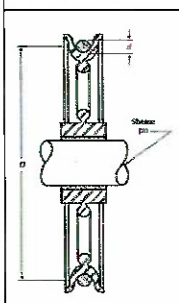 MAIN POINT SHEAVES: SHEAVE D / WIRE ROPE d = >18	API SPEC 2C	16 inch (D) 5/8 inch (d) 25 (Ratio D/d)
	AUX SHEAVES: SHEAVE D / WIRE ROPE d = >18	API SPEC 2C	16 inch (D) 5/8 inch (d) 25 (Ratio D/d)
	IDLER SHEAVES: SHEAVE D / WIRE ROPE d = > 18 (If applicable)	API SPEC 2C	16 inch (D) 5/8 inch (d) 26 (Ratio D/d)
	MAIN BLOCK SHEAVES: SHEAVE D / WIRE ROPE d = > 16	API SPEC 2C	16 inch (D) 5/8 inch (d) 25 (Ratio D/d)
Load Block	Load Block: Check the load block for cleanliness, binding sheaves, damaged or worn sheaves, worn or distorted sheave pins, broken bolts, and worn cheek weights. Note ;.....	Industry Standard	(✓) YES ( ) NO As found.....Good.....
	Hook: Check the hook damage, excessive wear to the hook safety latch, hook swivel trunnions, thrust collar, securing, damage or missing lubrication fittings, proper lubrication, cracks and gouges, and if visibly bent or twisted or has been exposed to welding or arching. Note ;.....	Industry Standard	(✓) YES ( ) NO As found.....Good.....
	Hook: Tip has been bent more than 10 degree out of plane from the hook body	Industry Standard/API RP2D7	(✓) YES ( ) NO As found.....Ok.....
	Inspect the Pins for bronze bushing and straight roller bearing should have a running clearnace of .031 inch/ sheave of end play and should be adjusted accordingly	Industry Standard	(✓) YES ( ) NO
	Inspect Hook or shackle to swivel case clearance is set at .031 to .062 inch, Clearance exceeding..12 to .18 (ONLY CROSBY BRAND)	OEM Crosby	(✓) YES ( ) NO
	OEM STANDARD RECOMMEND that Crane block removal from service untill replaced and repair following below	OEM STANDARD	
	- Elongated center pin and hook trunnion holes exceeding 5% of Original diameter	OEM STANDARD	(✓) YES ( ) NO As found.....Ok.....

SYSTEM	TASK	Specification	Record/Reading
	-Material loss due to wear exceeding 10% of original section	OEM STANDARD	(✓) YES ( ) NO As found OK
	-Sheave wire rop groove diameter smaller than 2.5%	OEM STANDARD	(✓) YES ( ) NO As found OK
	Loosened tie bolts nuts, center pin round nuts, check weight cap screws and hook nut cap screws. Tie bolt nuts to be torqued to 35-40 ft.Lbs and restaked, all other fasteners wrench tight	OEM STANDARD	(✓) YES ( ) NO
	Throat opening - any distortion causeing an increase in throat opening of 5% not ot exceed 1/4 in. (6 mm.)(or as recommended by the manufacturer)	ASME B30.10	(✓) YES ( ) NO
	Inspect rope track worn in sheave groove, sheave must be resurface or replace	API RP 2D	(✓) YES ( ) NO
	Ensure the load block is not using "Cast Iron" check weights they can not be used as per API	API SPEC 2C	(✓) YES ( ) NO As found OK
	Determine if all hooks are equipped with properly operating safety latches and check for proper functioning	API RP 2D	(✓) YES ( ) NO
	Lubricate sheave bearings and swivels	OEM Manual	(✓) YES ( ) NO
	Re-thighten nut firmly to point at which trunion will just rotate, the Re-tighten set-screw in nut and thread condition as in the picture below,	Industry Standard	(✓) YES ( ) NO
	Last NDE inspection record	Industry Standard	Last inspect date 31/1/22
	RECORD LOAD BLOCK INFORMATION : — Manufacturer:	OEM Manual	McKissick
	Model:	OEM Manual	MB30T200E
	Serial Number:	OEM Manual	80119
	Record Load block measurements and details for future comparison with historical data	Industry Standard	(✓) YES ( ) NO
	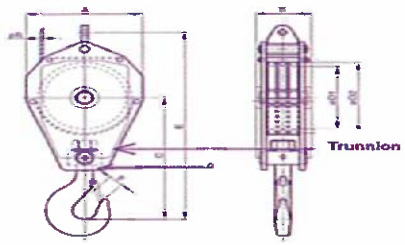 — A - Block OD	Industry Standard	19.29 mm/ inch
	B - Block length	Industry Standard	12.29 mm/ inch
	C - Center of Pin to hook Saddle	Industry Standard	9.8 mm/ inch
	D1 - Sheave Diameter	Industry Standard	14 mm/ inch
	E - Block Width	Industry Standard	3.4 mm/ inch
	F - Throat Opening	Industry Standard	6.4 mm/ inch
	G - Trunnion	Industry Standard	0.832 mm/ inch
Aux. Ball	Inspect Auxiliary ball for cleanliness, binding swivel, work pad-eye hole. Inspect the hook damage, excessive wear to the hook safety latch, Bent connector plates,Severe corrosion pitting, hook swivel trunnions, thrust collar, securing, damage or missing lubrication fittings,Loose, missing or damaged retaining nuts, cotter pins or swivel set screws ,Missing or illegible rating and warning tags, proper lubrication, cracks and gouges, and if visibly bent or twisted or has been exposed to welding or arching.	Industry Standard	(✓) YES ( ) NO
	Hook: Tip has been bent more than 10 degree out of plane from the hook body	Industry Standard/API RP2D7	(✓) YES ( ) NO
	OEM STANDARD recommend that Crane overhaul ball removal from service untill replaced and repair following below	OEM STANDARD	
	- Elongated ball pin holes, hook latch pin holes and swivel eye exceeding 5% of original diameter,	OEM STANDARD	(✓) YES ( ) NO As found Normal
	-Swivel end play gap exceeding .08". Excessive end play indicates damaged internal set screw	OEM STANDARD	(✓) YES ( ) NO As found Normal
	-Material loss due to wear exceeding 10% of original section	OEM STANDARD	(✓) YES ( ) NO As found Normal
	Throat opening - any distortion causeing an increase in throat opening of 5% not ot exceed 1/4 in. (6 mm.)(or as recommended by the manufacturer)	ASME B30.10	(✓) YES ( ) NO
	All hooks that lift personnel are to have a positive locking safety latch **locking Pin to be used while lifting personnel**	API RP 2D	(✓) YES ( ) NO
	*** Temperature Effected : When hooks are to be used at temperature above 400° F. (204°C) or below -40°F (-40°C), the hook manufacturer or a qualified person should be consulted *** Chemically Active Environment : The strength of hooks can be affected by chemically active environments, such as caustic or acid substances or fumes. The hook manufacturer or qualified person should be consulted before hooks are used in chemically active environment	ASME B30.10	
	Verify to ensure nut firmly at which trunion rotate. Identify to set-screw in nut/ swivel/ counter pin and thread condition.	Industry Standard	( ) YES ( ) NO
	Last NDE inspection record	Industry Standard	Last inspect date 31/1/22
	RECORD AUX BALL INFORMATION : — Manufacturer:	OEM Manual	McKissick
	Model:	OEM Manual	MB07T200E
	Serial Number:	OEM Manual	80091
	Record Auxiliary Ball measurements and details for future comparison with historical data: For Model MB07T200E ONLY	Industry Standard	
	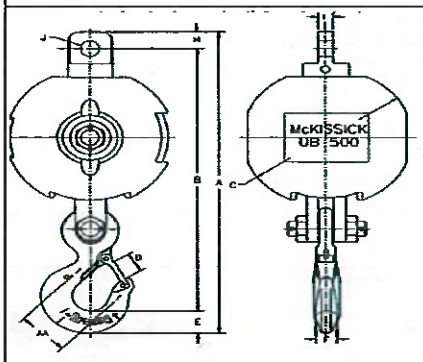 — AA Dimensions 3.0 Inch	Industry Standard	3 mm/ inch
	A Dimensions 24.89 Inch	Industry Standard	24.8 mm/ inch
	B Dimensions 21.71 Inch	Industry Standard	21.7 mm/ inch
	C Dimensions 12.50 Inch	Industry Standard	12.5 mm/ inch
	D Dimensions 1.61 Inch	Industry Standard	1.6 mm/ inch
	E Dimensions 1.81 Inch	Industry Standard	1.8 mm/ inch
	F Dimensions 1.38 Inch	Industry Standard	1.35 mm/ inch
	H Dimensions 1.38 Inch	Industry Standard	1.35 mm/ inch
	I Dimensions 0.88 Inch	Industry Standard	0.86 mm/ inch
	J Dimensions 1.31 Inch	Industry Standard	1.3 mm/ inch
	Record Auxiliary Ball measurements and details for future comparison with historical data: For Model OB 7EE 200-4	Industry Standard	
	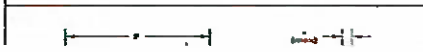 — A Dimensions 27.25 Inch	Industry Standard	mm/ inch

SYSTEM	TASK	Specification	Record/Reading
	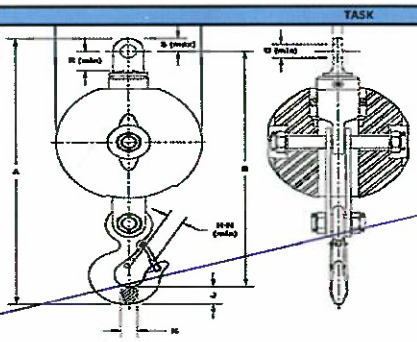 B Dimensions 24.10 Inch	Industry Standard	_____mm/ inch
	F Dimensions 12.00 Inch	Industry Standard	_____mm/ inch
	H-H Dimensions 1.38 Inch	Industry Standard	_____mm/ inch
	J Dimensions 1.81 Inch	Industry Standard	_____mm/ inch
	K Dimensions 1.46 Inch	Industry Standard	_____mm/ inch
	R Dimensions 1.55 Inch	Industry Standard	_____mm/ inch
	S Dimensions 1.34 Inch	Industry Standard	_____mm/ inch
	T Dimensions 1.03 Inch	Industry Standard	_____mm/ inch
	U Dimensions 1.31 Inch	Industry Standard	_____mm/ inch
Safety system	Check Condition anti - two block , hanging chain ,eye bolts , fix bolts , shackle for missing , corrosion , erosion , deformation	API RP 2D	(✓) YES ( ) NO
	Check anti - two block kick out plate for freely movement	Company Spec/Standard	(✓) YES ( ) NO
	Check anti-2-block device proper function of Main winch	Company Spec/Standard	(✓) Function ( ) False
	Check anti-2-block device proper function of Aux. winch	Company Spec/Standard	(✓) Function ( ) False
	Check relation of boom radius and boom angle (lowest, middle, highest) with refrence to load chart. Recharge fluid W-15 to load indicator, if required.	API RP 2D	(✓) YES ( ) NO
	Functional test of emergency lowering system (See procedure in Emergency Load Lowering Box). **Note:** Keep for 1 Yr PM to sustain crane mechanic competency. **Caution:** Function test must be performed on top deck with max 2-foot height.	Company Spec/Standard	(✓) YES ( ) NO ( ) N/A
	Visually check emergency load lowering kit. Ensure EMERGENCY LOWERING PROCEDURE and MATERIAL LIST are in the box. - Ensure ALL items shown on the list are in the box and in good condition - SECURE THE BOX WITH A TIE WRAP.	Company Spec/Standard	(✓) YES ( ) NO ( ) N/A
Slew Mechanism	Visually check for damage and excessive wear on gear teeth	OEM Manual	(✓) YES ( ) NO
	Visually check slew gear box in the area of oil seal for any leaks	API RP 2D	(✓) YES ( ) NO
	RECORD SLEW GEAR BOX INFORMATION : Manufacturer:	OEM Manual	Eskridge
	RECORD SLEW GEAR BOX INFORMATION : Model:	OEM Manual	250A-D1CA-B1
	RECORD SLEW GEAR BOX INFORMATION : Serial Number:	OEM Manual	
	CHECK and RE-TORQUE swing drive gearbox mounting bolts at following brands: - ESKRIDGE, Model: 250 = 150 FT-LBS	API RP 2D	(✓) Yes ( ) No
	Check swing gearbox oil level/condition, top up if required	OEM Manual	(✓) YES ( ) NO
	Monitor slew gearbox oil condition by visually examine for burnt smell, metal particles, and/or other contaminants, record and change if found. — Meropa 220	OEM Manual	(✓) CHANGE OIL ( ) NOT CHANGE OIL
	Change slew gear box oil — Meropa 220	OEM Manual	(✓) CHANGE OIL ( ) NOT CHANGE OIL
	Grease all pivot points of slew ring (bearing)	OEM Manual	(✓) YES ( ) NO
	Grease open gears (pinion)	OEM Manual	(✓) YES ( ) NO
	Rotate crane 360 degree and check smoothness of operation	OEM Manual	(✓) YES ( ) NO
	Check swing drive static parking brake for proper operation Caution: DO NOT stop the swing of the crane with this static brake (parking brake)	OEM Manual	(✓) YES ( ) NO
	Check swing drive dynamic parking brake for proper operation	OEM Manual	(✓) YES ( ) NO
	Check swing lock mechanism condition; corrosion ,dent , loos all part,worn and wear	OEM Manual	(✓) YES ( ) NO As found condition Ok
	Check swing lock mechanism freely lock and unlock for function. **Check and inspect for hydraulic for leaks on actuator model.**	OEM Manual	(✓) YES ( ) NO As found condition Ok
	Check condition of slew ring bolts e.g. Bolt grade and washers. Caution: Use only hardened flat washers under head of bolt. Do not use lock washers, or regular flat washers.	Industry Standard	(✓) YES ( ) NO As found condition Ok
	Monitor ball-ring grease sample. If found wear and tear particles, take sample and send to lab. **Wear assessment by grease sample analysis—wear may be monitored by periodic grease sample analysis as describe in this section. Grease samples should be collected every twelve months as a minimum and the results of the analysis recorded; this period should be shortened if obvious metal or contaminants are present	API PR 2D	( ) SEND TO LAB (✓) NOT SEND TO LAB As found Ok
	Verify crane condition and load test as separate procedure. **Table 1—Static/Onboard Test Load and Radius** Static/Onboard Rated Load at a Specific Radius lb (kg) — Test Loads in Excess of Static/Onboard Rated Load at a Specific Radius ≤ 40,000 (18,144) — 25 % > 40,000 ≤ 100,000 (>18,144 ≤ 45,356) — 10,000 lb (4536 kg) > 100,000 (45,356) — 10 %	API 2C	(✓) YES ( ) NO Specific test load.....lbs.
	Verify crane condition and load test as separate procedure. " Record crane load test in load test form."	Company Standard	(✓) YES ( ) NO

Risk Level Definitions: The following 3 levels indicate the impact the noted deficiency poses to the operation or structural integrity of the equipment:

Level 1 = Incidental	Level #2 = Restricted Operation	Level #3 =Out of Service
Minor deficiency that is recommended to be promptly addressed, but poses no safety and/or environmental risk. The crane can still be operated at full duty.	Deficiency identified that has the potential to limit, de-rate or damage the crane, its surroundings and/or the environment. The duty and locked/ tagged out until the crane's duty and operation should be de-rated or service restricted.	The crane should be removed from duty and locked/ tagged out until the deficiency is rectified.

System:	Risk Level:	Component:		In Accordance with:	
		Location:		Date Originated:	
Description:	Pressure damage Boom, Main, Air comp damage.				

SYSTEM	TASK	Specification	Record/Reading
Recommended Action:	Replace next plan		
Recommended urgency timeframe for corrective action:	Completed Date:	Completed By:	

System:	Risk Level:	Component: / Location:	In Accordance with: / Date Originated:
Description:	Hose -4 Main, Aux load cell to tube		
Recommended Action:	Replace next plan		
Recommended urgency timeframe for corrective action:	Completed Date:	Completed By:	

System:	Risk Level:	Component: / Location:	In Accordance with: / Date Originated:
Description:	Emergency kill cable damage		
Recommended Action:	Replace next plan		
Recommended urgency timeframe for corrective action:	Completed Date:	Completed By:	

System:	Risk Level:	Component: / Location:	In Accordance with: / Date Originated:
Description:	Hose -6 x 45° Boom connect 4 EA		
Recommended Action:	Replace next plan		
Recommended urgency timeframe for corrective action:	Completed Date:	Completed By:	

System:	Risk Level:	Component: / Location:	In Accordance with: / Date Originated:
Description:	Hose -4 x 45° Boom connect 2 EA		
Recommended Action:	Replace next plan		
Recommended urgency timeframe for corrective action:	Completed Date:	Completed By:	

System:	Risk Level:	Component: / Location:	In Accordance with: / Date Originated:
Description:	Hose -4 Line parking brake 2 EA		
Recommended Action:	Replace next plan		
Recommended urgency timeframe for corrective action:	Completed Date:	Completed By:	

Hose -6 Line Return A&B to tank

Hose -4 x 60 Case drain Motor to Motor

Hose -4 Line accelerator

Hose -4 Engine oil pressure to Alarm

Hose -8 Line A&B Main to tube

Hose -4 Line flowdivider

Job completed By

[redacted]

Job Completed Date : 10 Sep 2025

BEWZA

3Y PM

Sheet: 180B1-80 (MS)_Eng 3126_Rev.2024

W/O: 1261927.

CRANE Mfg. : Nautilus
MODEL: 180B1-80 (MS)
SERIAL NUMBER :

LOCATION: BEWZA

3Y - PM JOB TASK CARD
WO: 1261927

Crew Size:
Estimated Hours:

SYSTEM	TASK		Specification	Record/Reading
Safety	Perform Job Safety Analysis (JSA)		Company Spec/Standard	(✓) YES ( ) NO
	Obtain "COMPANY" PERMIT TO WORK		Company Spec/Standard	(✓) YES ( ) NO
	Perform Tool Box Talk		Company Spec/Standard	(✓) YES ( ) NO
	BEFORE/AFTER JOB EXECUTION: Ensure to comply with isolation procedure (LOCK OUT/TAG OUT, WARNING SIGNS and BARRIERS).		Company Spec/Standard	(✓) YES ( ) NO
Required Tools	Insure proper tools are available at the job site		Company Spec/Standard	(✓) YES ( ) NO
	Tool bag		Company Spec/Standard	(✓) YES ( ) NO
	Tool box		Company Spec/Standard	(✓) YES ( ) NO
	Tool Container		Company Spec/Standard	(✓) YES ( ) NO
	MPI equipment and operator		Company Spec/Standard	(✓) YES ( ) NO
	Check safety harness Software and Hardware should be good condition before use		Company Spec/Standard	(✓) YES ( ) NO
	Check Rescue Equipment ready to use onsite		Company Spec/Standard	(✓) YES ( ) NO
	Portable Scaffolding and Crew if require		Company Spec/Standard	(✓) YES ( ) NO
Lubricants	Insure proper lubricants and consumables are available at the job site.		Company Spec/Standard	(✓) YES ( ) NO
	Hydraulic System - Hydraulic Oil	Rando HD-68	OEM Manual	(✓) YES ( ) NO
	Slew Gearbox - Gear Oil	Meropa 220	OEM Manual	(✓) YES ( ) NO
	Auxiliary Hoist - Gear Oil	Meropa 220	OEM Manual	(✓) YES ( ) NO
	Main Hoist - Gear Oil	Meropa 220	OEM Manual	(✓) YES ( ) NO
	Grease Points - Lithium Based **IT MUST NOT INCLUDE MOLYBDENUM DISULPHIDE**	MULTIFAK EP#2	OEM Manual	(✓) YES ( ) NO
	Open Gear Teeth - Open Gear Lube highly water resistant and of an adhesive nature.	OMEGA 73	OEM Manual	(✓) YES ( ) NO
	Wire rope Lubricant Company preferred grade	Birlube 70	OEM Manual	(✓) YES ( ) NO
	Engine Oil - SAE Grade 15W-40 (Delo Gold)	15W-40	OEM Manual	(✓) YES ( ) NO
	Safe Load Indicator fluid	W-15	OEM Manual	(✓) YES ( ) NO
	Engine Radiator - Should have radiator preservatives additives	Cat® SCA	OEM Manual	(✓) YES ( ) NO
Consumables	Spray Cold Galvanize		Company Spec/Standard	(✓) YES ( ) NO
	Denso Tape		Company Spec/Standard	(✓) YES ( ) NO
	WD-40		Company Spec/Standard	(✓) YES ( ) NO
History Review	Before starting work, tasks preparation at least 1 day prior to starting work: 1. Review history PM/ CM from Roving Team, 2. Review last PM/ CM/ PMI from Crane Mech, 3. List out all punch list and prepare parts. 4. Review last Certificate task performed		API RP 2D	(✓) YES ( ) NO
	Require to update part history from Crane Mech on following main compenents to ensure the right parts are prepared: - Aux/ Main/ Boom Cylinder, Engine, Swing Gearbox, etc. Reference: Crane OEM information of each part need to be recorded - Manufacturer & Contact info - Model & serial number - Installation date		Company Spec/Standard	(✓) YES ( ) NO
	Review history data from Certificates and incorporate into current PM: - Pull Test Certificates (ongoing update, 4 yr. history). - Load Test Certificates (ongoing update, 4 yr. history). - Wire Rope Certifications (running rope and standing rope) (life of rope). - Hoist Certifications for hoist classified as "personnel handling" hoist.		API RP 2D	(✓) YES ( ) NO
	Review Last Preventative Maintenance Records (Inspection Reports) - Pre-use (Pre-Post Inspection) - 6 Monthly (API RP 2D Not Defined, Company Standard) - 1 Yearly (API RP 2D Defined Annual Inspection)		API RP 2D	(✓) YES ( ) NO
Lifting Gear Preparation	Visually Inspect (Sling, sling hooks and shackles) include Websfing / Chain		Company Spec/Standard	(✓) YES ( ) NO
	Check color code / Tag & date inspection		Company Spec/Standard	(✓) YES ( ) NO
General	Determine if access route to-from crane is clean, safe, unobstructed and adequately protected against falls, tripping and slipping		Company Spec/Standard	(✓) YES ( ) NO
	Check drain lines and drip pans for deterioration		API RP 2D	(✓) YES ( ) NO
	Remove any sediment collected in the bottom of drip pans		Industry Standard	(✓) YES ( ) NO
	Check for general crane and components for loss of protective coating and corrosion		Industry Standard	(✓) YES ( ) NO
	Check for missing or loose ,corrosion, deformation pins, pin keepers, bolts, nuts, fasteners of all faders, cages and working platform		API RP 2D	(✓) YES ( ) NO
	Apply grease to exposed grease parts (control valve spools, ball-ring gear, parking brake valve, etc.)		OEM Manual	(✓) YES ( ) NO
Prime Mover	Engine Caterpillar		OEM Manual	(✓) YES ( ) NO
	CATERPILLAR MODEL 3126	S/N.:	OEM Manual	9ZR03758
		AR.No.:	OEM Manual	132-4383
	Change engine lube oil & oil filter and check the condition of old oil. As found ; Changed.		OEM Manual	(✓) YES ( ) NO
	Check diesel tank level, top up if required.		OEM Manual	(✓) YES ( ) NO
	Check / Clean crankcase breather cap. Change if required		OEM Manual	(✓) YES ( ) NO
	Check / Clean air cleaner filter, Replace if require. (Note : Include inspect air cleaner housing)		OEM Manual	(✓) YES ( ) NO
	Check condition and inspect of the radiator and cap.		OEM Manual	(✓) YES ( ) NO
	Check for any signs of leaks on or around the engine ie; Crankshaft seal for front & rear seal , Engine oil cooler. As found; not leaking.		OEM Manual	(✓) YES ( ) NO
	Check condition exhaust system for leaks, corrosion, insulation and general. As found ; not leaking.		OEM Manual	(✓) YES ( ) NO
	Check condition of all engie hoses and tube. (Fuel supply,Cooling system and Lube oil system. As found; not leaking.		OEM Manual	(✓) YES ( ) NO
	Drain water and sediment form diesel tank. As found ; good.		OEM Manual	(✓) YES ( ) NO
	Check / Clean Diesel tank level sightglass and diesel tag.		OEM Manual	(✓) YES ( ) NO
	Apply grease of fan bearing/shaft.		OEM Manual	(✓) YES ( ) NO
	Check and inspect the vibration damper and pulley. As found ; good		OEM Manual	(✓) YES ( ) NO
	Change water coolant and check condition base of water coolant and record PH.		OEM Manual	(✓) YES ( ) NO
	COOLANT PARAMETERS (PH):	6 or higher	OEM Manual	PH = 7
	HOUR METER PARAMETERS:	LAST READING _____ HRS	OEM Manual	83 HRS
	Check and retighten the bolts of all engine base. / Inspection mouting rubber. As found ; good.		OEM Manual	(✓) YES ( ) NO
	Inspect the engine fan blades that there is a break is it severely distorted or rusted. As found ; good		OEM Manual	(✓) YES ( ) NO
	Change and adjust the tension engine belts. Remark; To check belt Tension, after has engine run more than 30 minules apply 400 N (90 lbs) of force midway between the pulleys. Correctly adjusted belts with deflect 13 to 19 mm (1/2 to 3/4 inch).		OEM Manual	(✓) YES ( ) NO

SYSTEM	TASK	Specification	Record/Reading
	Check engine HYD starter drive gear bendix and fly wheel gear teeth condition and record. **Replace if required"	OEM Manual	(✓) YES ( ) NO Bendix Gear : 90 % Fly wheel Gear teeth : 90 %
	Check and inspect condition the Bendix of hydraulic Starter motor.	OEM Manual	(✓) YES ( ) NO
	Lubricate and check engine throttle system.	OEM Manual	(✓) YES ( ) NO
	Determine if the tachometer operates properly: Record Value of Idle & Max Speed (RPMs) Note: Too low Idle (RPMS) will cause excessive worn at winch brake	OEM Manual	
	ENGINE RPM SPECIFIC — IDLE SPEED: 850-950 RPM	OEM Manual	850 RPM
	ENGINE RPM SPECIFIC — MAX SPEED: 2200 RPM	OEM Manual	2200 RPM
	Confirm engine oil pressure as per Parameters below and Record Value:	OEM Manual	
	ENGINE OIL PRESSURE SPECIFIC — Minimum: Not lower then 30 PSI	OEM Manual	40 PSI
	ENGINE OIL PRESSURE SPECIFIC — Maximum: 70 PSI	OEM Manual	65 PSI
	Confirm engine fuel pressure Parameters are correct and Record Value:	OEM Manual	
	ENGINE FUEL PRESSURE SPECIFIC** — Normal: Green Range/ 15 PSI **Note;Fuel pressure at high idle is lower than 105 kPa (15 psi)RAMETERS	OEM Manual	(✓) YES ( ) NO
	Confirm engine temperature Parameters and Record Value:	OEM Manual	
	ENGINE WATER TEMP SPECIFIC — NORMAL: 120 - 180 degrees F	OEM Manual	170 F
	Test engine SAFETY DEVICE- ensure engine kill cable shuts off FUEL supply	API RP 2D	(✓) Function ( ) False
	Test engine SAFETY DEVICE- ensure EMERGENCY KILL CABLE - shuts off AIR supply	API RP 2D	(✓) Function ( ) False
	Test engine SAFETY DEVICE- ensure ENGINE low lube oil - releases OIL PRESSURE to ctivate Alarm Air System ***Note*** Engine oil pressure low alarm at 20 PSI	Company Spec/Standard	(✓) Function ( ) False
	Test engine SAFETY DEVICE- ensure HIGH TEMP - releases OIL PRESSURE to activate Alarm Air System	Company Spec/Standard	(✓) Function ( ) False
	Change water separator filter.	OEM Manual	(✓) YES ( ) NO
	Check the general conditionand functioning of turbocharger. Note;	OEM Manual	( ) Leak (✓) Not Leak
	Change fuel filter and inspect the primary hand pump.	OEM Manual	(✓) YES ( ) NO
	Check water temperator regulator.(Thermostat). Change if require refer from cooling temperature.	OEM Manual	(✓) YES ( ) NO
	Check general condition the Governor and control linkage. (Inspect the throtle linkage)	OEM Manual	(✓) YES ( ) NO
	Check or adjust the engine valve lash. (Intake vale = 0.015", Exhaust valve = 0.025")	OEM Manual	(✓) YES ( ) NO
	Check or adjust the fuel timing control linkage of Unit Injector (CAT 3126) Reference: Fuel timing injection length, use the following references to obtain information: - Engine Information Plate (located at valve cover) Specific data 15.09....mm/inch. Engine S/N....92R03458 - TMI (Technical Marketing Information - located at Manual Book) - Fuel setting and related Information Fiche	Company Spec/Standard	____mm/ inch (After Adjustment)
	Check condition wear of pump drive spline and record **Note; Remaining 70% of Original Spline Surface must be replace.	Company Spec/Standard	90 % Remaining
	Check condition wear of adaptor Coulping spline shaft and record **Note; Remaining 70% of Original adaptor Coulping spline shaft Surface must be replace.	Company Spec/Standard	95 % Remaining
	Check condition wear of Coulping spline and record. Re-tigthen of all lock bolts. **Note; Remaining 70% of Original adaptor Coulping spline shaft Surface must be replace.	Company Spec/Standard	90 % Remaining
Hydraulic Start System (Apply for C2-Remote P/F Only)	Check pressure system at the pressure gauge which should reach 3,000 PSI as standard when the system is FULLY charged. Record Value. (As the system cools down, the pressure should drop slightly and finally stabilised.)	OEM Manual	(✓) YES ( ) NO
	Visually inspect all hydraulic connections and hoses for leaks and retighten if necessary. (Caution: This should NOT be done if the system is under pressure.) 1. Slowly release system pressure by loosening the bleed screw on top of the hand pump. 2. Ensure no pressure remains, retighten the suspected leak fitting or replace the damaged hose or component. 3. Retighten the bleed screw on the hand pump. 4. Pump the system up to 2200 - 2600 PSI 5. Inspect that the leak was eliminated.	OEM Manual	(✓) YES ( ) NO
	Function check Accumulator Pre-charge. (Caution: This should NOT be done if the system is under pressure.) 1. Shut the engine off, release system pressure via the bleed screw on top of the hand pump 2. Retighten bleed screw and actuate the hand pump. The pressure will rapidly increase and then stabilised. This pressure is related to accumulator gas pre-charge pressure. 4. If the pressure rapidly increase to 3000 PSI, it indicates that the accumulator has lost its gas charge. 5. Troubleshoot as necessary	OEM Manual	(✓) YES ( ) NO
	Check function rechaging system by function boom down while the engine running. 1. The crane engine is running at 1,000-1500 RPM. 2. Slowly control lever boom function down for charging pressure to accumulator. 3. This pressure should read on prssure gauge between 2200 - 2600 PSI depending on the recharge ratio 80% std. (90% optional). Record Pressure Value.	OEM Manual	2500 PSI
	Check Nitrogen pressure in Accumulator ***Note**spec @ 1,500 psi as follow schematic and if found pressure loss below 1400 PSI then prepare recharge nitrogen in system	OEM Manual	1500 PSI
	Every 36 months or 2000 engine running hours (approximately 1500 starts) replace the high pressure filter.	OEM Manual	(✓) YES ( ) NO ( ) N/A
Pneumatic System	Check for noisy compressor operation, which could indicate a worn drive gear coupling, a loose pulley or excessive internal wear	OEM Manual	(✓) YES ( ) NO
	Check Air Compressor external oil supply and return lines, if applicable, for kinks, bends, or restrictionsto flow	OEM Manual	(✓) YES ( ) NO
	Inspect the Air compressor discharge port, inlet cavity and discharge line for evidence of restrictions and carboning. (If excessive buildup is noted)	OEM Manual	(✓) YES ( ) NO
	Check all hose connections are sound and all mounting and pivoting connections are secure.	OEM Manual	(✓) YES ( ) NO
	Check condition / Clean and lubricate unloading valve	OEM Manual	(✓) YES ( ) NO
	Check proper air pressure is available for the system. Record Value.	OEM Manual	
	AIR SYSTEM PARAMETERS: MAX 60 PSI	OEM Manual	60 PSI
	Visually inspection condition of air receiver for signs of corrosion or loose of structural integrity.	Industry Standard	(✓) YES ( ) NO
	Check the hose, piping and tubing for mechanical damage, corrosion, splits, blisters, cracking or excessive abrasion on the outer surface	Industry Standard	(✓) YES ( ) NO
	Drain off air filter and reciever to remove condensed water. If water is present, drain until water is removed.	Industry Standard	(✓) YES ( ) NO
	Check proper operation of pop off valve, by manually functioning valve.	Industry Standard	(✓) YES ( ) NO
	Check proper operation of manual latch valve, by manually functioning latch.	Industry Standard	(✓) YES ( ) NO
	Check proper operation of small engine alarm horn.	Industry Standard	(✓) YES ( ) NO
Hoist / Brakes	Visually check a hoist exhibits erratic operation and/or unusual noise, the hoist must be taken out of service until it is inspected and serviced by a qualified technician. Continued operation of a hoist with a defect in a critical component may lead to loss of load control, property damage, serious injury or death.	OEM Manual	(✓) YES ( ) NO
	Visual exteriors of hoist, frames, drums and flanges for damage, leaks, cracks and wear and repair/replace as required to maintain the structural integrity of the hoist.	OEM Manual	(✓) YES ( ) NO
	Check all hoist mounting pins, bolts or other fasteners and replace or tighten as necessary.	OEM Manual	(✓) YES ( ) NO

SYSTEM	TASK			Specification	Record/Reading
	Lubricant level must be maintained between the minimum and maximum levels; midway up sight glass or at bottom of level plug port as equipped and check/clean plug vent. Use only the recommended type of lubricant.			OEM Manual	(✓) YES ( ) NO
	Inspect Brake Valve Opening Pressure test V/V 1-1/4" PD Series : no lower than 550 PSI V/V 1-1/2" CH Series : no lower than 575 PSI	Main		Braden Bulletin 527-Dec,1996	600 PSI
		Aux			500 PSI
	Inspect Brake cylinder opening pressure test. CH/PD Series : 400-450 PSI.	Main		Industry Standard	400 PSI
		Aux			400 PSI
	Measure differancian of static and dynamic brake. CH/PD Series : 150-250 PSI.	Main		Industry Standard	200 PSI
		Aux			100 PSI
	Check for external oil leaks and repair as necessary. This is extremely important due to the accelerated wear that will result from insufficient lubricating oil in the hoist.			OEM Manual	(✓) YES ( ) NO
	RECORD BOOM CYLINDER INFORMATION :	Boom cylinder Diameter:		OEM Manual	DIA: 12 inch
		CY Number:		OEM Manual	L= 7892-1 R= 7892-1
		Serial Number:		OEM Manual	L= 6392 R= 6395
	RECORD MAIN HOIST INFORMATION :	Manufacturer:		OEM Manual	Braden
		Model:		OEM Manual	CH175A-23000-02-
		Serial Number:		OEM Manual	0500465
	Check MAIN HOIST for proper operation and good condition			API RP 2D	(✓) YES ( ) NO
	Brake test & record pressure of MAIN HOIST.			OEM Manual	(✓) YES ( ) NO As found ok
	Change main hoist gear oil and inspect for small particles in the old oil. ** Refer to Onsite Gear Oil Sample Procedure ** ** Replace and send oil sample to SKL if abnormal ** ** Take photo of Oil Sampling for Reference**			OEM Manual	(✓) YES ( ) NO As found ok
	RECORD AUXILIARY HOIST INFORMATION :	Manufacturer:		OEM Manual	Braden
		Model:		OEM Manual	PD12C-2000A-04-
		Serial Number:		OEM Manual	0456902
	Check AUXILIARY HOIST for proper operation and good condition			API RP 2D	(✓) YES ( ) NO
	Brake test & record pressure of AUXILIARY HOIST			API RP 2D	(✓) YES ( ) NO
	Change Aux. hoist gear oil and inspect for small particles in the old oil. ** Refer to Onsite Gear Oil Sample Procedure ** ** Replace and send oil sample to SKL if abnormal ** ** Take photo of Oil Sampling for Reference** Please record if any abnormal condition. Note.....			OEM Manual	( ) SEND SKL LAB (✓) NOT SEND SKL LAB
	Check pressre relief Valve: Determine hoistes' relief valve pressure gauge is working and giving accurate measurement by notice whether pressure gauge is vibrating or not. If not, set relief valve pressure in accordance with the schematic and parameters below. Record all readings.			OEM Manual	(✓) YES ( ) NO
	BOOM RELIEF VALVE TEST	Relief Specific:	3,000 PSI	OEM Manual	3000 PSI
	MAIN HOIST RELIEF VALVE TEST	Relief Specific:	3,000 PSI	OEM Manual	3,085 PSI
	AUX HOIST RELIEF VALVE TEST	Relief Specific:	2,700 PSI	OEM Manual	2800 PSI
	SWING RELIEF VALVE TEST	Relief Specific:	1,500 PSI	OEM Manual	1,500 PSI
	Measure Pressure of hoist motor case drains and Record Value Reference Bulletin: BRADEN Inspection, Testing, Preventive Maintenance and Special Operating Instructions For Planetary Hoists PB-308 latest edition for further details.			OEM Manual	
	MAIN HOIST CASE DRAIN for Gear Motor (Down Mode).	PRESSURE	< 100 psi	Company Spec/Standard	10 PSI
	AUX. HOIST CASE DRAIN for Gear Motor (Down Mode).	PRESSURE	< 100 psi	Company Spec/Standard	20 PSI
Hydraulic System	Check hydraulic tank oil level. Oil should be visible in the sight glass. Top up as required (3/4 Tank Minimum)			OEM Manual	(✓) YES ( ) NO
	Check hydraulic oil condition. (Check if running hours are more than 100 hours from last oil change or during Annual inspection) ** Refer to Onsite Hydraulic Oil Sample Procedure ** ** Replace and send oil sample to SKL if abnormal ** ** Take photo of Oil Sampling for Reference**		Rando HD-68	Company Spec/Standard	( ) SEND SKL LAB (✓) NOT SEND SKL LAB
	Inspect hydraulic tank and strainer filter. Change hydraulic oil, if required with lab confirmation.			Company Spec/Standard	(✓) YES ( ) NO
Hydraulic System	Drain off 1 liter of oil to remove condensed water. If water is present, drain until water is removed and top up with clean oil			Industry Standard	(✓) YES ( ) NO
	Check for any hydraulic leaks			Industry Standard	(✓) YES ( ) NO
	Check the hydraulic hose, piping and tubing for mechanical damage, corrosion, splits, blisters, cracking or excessive abrasion on the outer surface			API RP 2D	(✓) YES ( ) NO
	Check that all hydraulic hose connections are sound and that all mounting and pivoting connections are secure.			Industry Standard	(✓) YES ( ) NO
	Lubricate hydraulic swivel in pedestal and insure tie down restrains are in place and preventing the swivel from rotating with the crane structure.			OEM Manual	(✓) YES ( ) NO
	Ensure the filler breather on tank is not covered or clogged			Industry Standard	(✓) YES ( ) NO
	Visually inspect for missing or loose pins, pin keepers, bolts, nuts, fasteners on all pumps, motors and valves			API RP 2D	(✓) YES ( ) NO
	* Re-tighten the stud bolt of hydraulic main pump and marking the nut for checking to prevent loosening. Note : Torqe spec model P76, P75, PGP/PGM350 ,PGP/PGM330 = 200 ft-lbs. , for model PGP/PGM315 = 140 ft-lbs. and PGP/PGM365 = 450 ft-lbs.			The Commercial Intertech manual	(✓) YES ( ) NO
	Check the filter bypass indicator, while engine is running.			OEM Manual	(✓) YES ( ) NO
	With engine running (after all other items pass inspection), check the system for leaks around fittings, hoses, valves and reservoirs			Industry Standard	(✓) YES ( ) NO
	With engine running, check the source of any unusual noise or vibration that may cause or indicate equipment damage or wear			Industry Standard	(✓) YES ( ) NO
	Ensure all hoses are properly rated for the system, see "Parameters" for each system for details.			Industry Standard	(✓) YES ( ) NO
	Record hydraulic oil operating temperture. Note: Hydraulic fluid overheating temperature is over 180 F degrees or 82 C, degrees (reservoir temperature)			Industry Standard	120 Degree F
	Determine if hydraulic return pressure gauge is working and giving accurate measurements. Record readings				
	RECORD HYDRAULIC RETURN PRESSURE PARAMETERS:		60 PSI "maximum"	OEM Manual	30 PSI
	Check and inspect the hydraulic return filters and seals.			OEM Manual	(✓) YES ( ) NO
	Function Testing and record pressures with engine at :		2,200 RPM	API RP 2D	
	BOOM FUNCTION TEST (Need Crane Mech to verify each platform)			OEM Manual	
	Boom Angle : 60 Degree (Recommend or as applicable)	UP — Cracking pressure	RECORD	OEM Manual	600 PSI
		UP — Full Speed Pressure	RECORD	OEM Manual	900 PSI
		DOWN — Cracking pressure	RECORD	OEM Manual	450 PSI

SYSTEM	TASK				Specification	Record/Reading
		DOWN	Full Speed Pressure	RECORD	OEM Manual	1500 PSI
	MAIN HOIST FUNCTION TEST (Need Crane Mech to verify each platform)				OEM Manual	
	Boom Angle : 60 Degree (Recommend or as applicable)	UP	Cracking pressure	RECORD	OEM Manual	100 PSI
			Full Speed Pressure	RECORD	OEM Manual	600 PSI
		DOWN	Cracking pressure	RECORD	OEM Manual	650 PSI
			Full Speed Pressure	RECORD	OEM Manual	1350 PSI
	AUX HOIST FUNCTION TEST (Need Crane Mech to verify each platform)				OEM Manual	
	Boom Angle : 60 Degree (Recommend or as applicable)	UP	Cracking pressure	RECORD	OEM Manual	100 PSI
			Full Speed Pressure	RECORD	OEM Manual	600 PSI
		DOWN	Cracking pressure	RECORD	OEM Manual	400 PSI
			Full Speed Pressure	RECORD	OEM Manual	1500 PSI
	SWING FUNCTION TEST (Need Crane Mech to verify each platform)				OEM Manual	
	Boom Angle : 60 Degree (Recommend or as applicable)	LEFT	Cracking pressure	RECORD	OEM Manual	100 PSI
			Full Speed Pressure	RECORD	OEM Manual	800 PSI
		RIGHT	Cracking pressure	RECORD	OEM Manual	100 PSI
			Full Speed Pressure	RECORD	OEM Manual	800 PSI
Electrical system, Crane Boom Lighting and red obstruction light	Check the electrical junction boxes, wires and connections for deterioration, desiccant bags, (replace as required)				Industry Standard	(✓) YES ( ) NO
	Check the condition of the grounding and lighting protection system.				Company Spec/Standard	(✓) YES ( ) NO
	Visually inspect boom floodlight and light guards for loose, missing, corroded				Company Spec/Standard	(✓) YES ( ) NO
	Check condition pipe support , U-bolt ,nuts of boom floodlight and Electric slipring for loose , missing , corroded				Company Spec/Standard	(✓) YES ( ) NO
	Check Electric slipring/swivel for 360° continuous rotation				OEM Munnal	(✓) YES ( ) NO
	Check Water ingress, condensation in electric slipring, red obstruction light and boom floodlight				OEM Munnal	(✓) YES ( ) NO
	Check feely movement and lubricate of boom floodlight				OEM Munnal	(✓) YES ( ) NO
	With generator in operation, intergize all lights to unsure proper function.				API RP 2D	(✓) YES ( ) NO
	Check condition of crane boom lighting and safety net is secured with strong point. * **Safety net should be replace 24 months after installation (2 year)***			Last installation date _____	Company Spec/Standard	(✓) YES ( ) NO
	Check function of crane sound signal				Company Spec/Standard	( ) YES ( ) NO (✓) N/A
	Check function of crane boom lighting at boom upper section				Company Spec/Standard	(✓) YES ( ) NO ( ) N/A
	Check function of crane boom lighting at boom lower section				Company Spec/Standard	( ) YES ( ) NO (✓) N/A
	Check function of crane boom lighting at winch skid				Company Spec/Standard	(✓) YES ( ) NO ( ) N/A
	Check function of crane boom lighting at crane cabin				Company Spec/Standard	(✓) YES ( ) NO ( ) N/A
	Check function becon light at boom tip				Company Spec/Standard	( ) YES (✓) NO ( ) N/A
	Inspection wire rope guide & Roller assembly				Company Spec/Standard	(✓) YES ( ) NO
	Visually inspect red obstruction light pipe support, u-bolts, nuts connection to hand rail for loose, missing, corroded				Company Spec/Standard	(✓) YES ( ) NO
	Visually inspect safety sling attached to the red obsnuction light and its base for loose, missing, corroded				Company Spec/Standard	(✓) YES ( ) NO
	Visually inspect red obstruction light function. The light is designed to turn on all the time.				Company Spec/Standard	(✓) YES ( ) NO
Operator Control Station	Check general condition of control panel, bolts, paint security, etc.				API RP 2D	(✓) YES ( ) NO
	Determine if there is a serviceable fire extinguisher in the vicinity of the crane				Company Spec/Standard	(✓) YES ( ) NO
	Determine if correct load chart is in use and easily visible for operator				API RP 2D	(✓) YES ( ) NO
	Determine if charts, indicators and hand signal chart are in the cabling and firmly attached				API RP 2D	(✓) YES ( ) NO
	Determine if angle/radius indicator plate is easily visible to operator and is moving freely.				API RP 2D	(✓) YES ( ) NO
	Check condition of control levers and determine if they "dead-man" back to the neutral position.				API RP 2D	(✓) YES ( ) NO
	Check condition of pressure gauges.				API RP 2D	(✓) YES ( ) NO
	Check proper control labels are firmly installed, completely legible and properly labeled				API RP 2D	(✓) YES ( ) NO
	Check controls for freedom-of-movement				API RP 2D	(✓) YES ( ) NO
	Check condition , Leak, freely moement of Dynamic swing break system *** Note; if HYD Oil loose in CYD reservoir must be refill*				OEM Manual	(✓) YES ( ) NO
	Check condition , Leak, freely moement of Accelerate System *** Note; if HYD Oil loose in CYD reservoir must be refill*				OEM Manual	(✓) YES ( ) NO
	Check all safety glass and rubber seal for proper condition				API RP 2D	(✓) YES ( ) NO ( ) N/A
	Function Test Horn. Note;.....good.....				Industry Standard	(✓) YES ( ) NO ( ) N/A
	Ensure PRE/POST Check List and Pocket Manual in the cabin. Note;.....				Company Standard	(✓) YES ( ) NO ( ) N/A
Load Indicator System	Visual check on fittings and connections for leaks. Fix leak if any. Note:.....				OEM Manual	(✓) YES ( ) NO
	Should any leaks exist, stop leak and recharge system, refer to maintenance manual				OEM Manual	(✓) YES ( ) NO
	Change and flushing Load cell fluid.				OEM Manual	(✓) YES ( ) NO
	Check general condition of tubbing, hoses, pins bolts, paint, etc.				Industry Standard	(✓) YES ( ) NO
	Insure load cell is free of obstructions				OEM Manual	(✓) YES ( ) NO
	Check condition of gauge(s) face and clean glass as required.				OEM Manual	(✓) YES ( ) NO
	Check the scale's operation and weighing accuracy. (Main Hoist) Remark : Maximum variance +/- 2% Note;.....				Company Spec/Standard	(✓) YES ( ) NO ( ) N/A
	Check the scale's operation and weighing accuracy. (Aux. Hoist) Remark : Maximum Variance +/- 2% Note:.....				Company Spec/Standard	(✓) YES ( ) NO ( ) N/A
	Check the internal casting fluid of weight indicator. top up if required				Industry Standard	(✓) YES ( ) NO ( ) N/A
	Insure SWL tag matches ratings on the Crane Load Chart.				OEM Manual	(✓) YES ( ) NO ( ) N/A
	Insure Boom Length, matches the Crane Load Chart				OEM Manual	(✓) YES ( ) NO ( ) N/A
	Insure Boom Angle measurements and readings match the boom angle indicator.				OEM Manual	(✓) YES ( ) NO ( ) N/A
	Insure Boom Radius measurements indicate the distance from center line of the crane to the hook				OEM Manual	(✓) YES ( ) NO ( ) N/A
	Check Main load cell gap 1/4 (0.250) inch				OEM Manual	(✓) YES ( ) NO ( ) N/A
	Check Aux load cell gap 3/8(0.380) inch (Compression Load Cell Type)				OEM Manual	(✓) YES ( ) NO ( ) N/A
Pedestal & Structure	Visually check Pedestal for chipped/cracked paint, deformation, worn parts, dents, corroded areas, cracks weld, etc.				API RP 2D	(✓) YES ( ) NO
	Check water rain drain at pedestal must be not obstuct				Industry Standard	(✓) YES ( ) NO

SYSTEM	TASK	Specification	Record/Reading
	Check pin and cotter pin of pedestal missing , corrosion, wear, damage and exercise pin.	Industry Standard	(✓) YES ( ) NO
	Visually check Base - Plate connection and Base hoist Structure for chipped/cracked paint, deformation, worn parts, dents, corroded areas, cracks weld, etc.	API RP 2D	(✓) YES ( ) NO
	Check A fixed such as Handrial, Walkway, Grating, stationary structure without significant movement in response to waves and currents in normal operating conditions.	API RP 2C	(✓) YES ( ) NO
	Visually check and lubricate maintenance Jib. ***Note*** If on pedestal crane	OEM Manual	(✓) YES ( ) NO ( ) N/A
	Check maintenance jib is secure firmly. ***Note*** if on pedestal crane	OEM Manual	(✓) YES ( ) NO ( ) N/A
Box Boom & Luffing CYD	Check and Verify entire box boom and Boom CYD for loss of protective coating and corrosion. Note;.....	API RP 2D	(✓) YES ( ) NO
	Check and Verify entire box boom and Boom CYD for chipped/cracked paint, deformation, worn parts, dents, corroded areas, cracks, etc. Note:.....	API RP 2D	(✓) YES ( ) NO
	Check and Verify boom end connections, for bends, dents, corroded areas, cracked welds, and signs of mechanical damage, wear, etc. **any deviation should be reported**	API RP 2D	(✓) YES ( ) NO
	Check and Verify boom rest and wooden support to ensure it's in good condition	API RP 2D	(✓) YES ( ) NO
	Inspect pin and pin holes of Upper tank and Lower tank for excessive clearance	OEM Manual	(✓) YES ( ) NO
	BOOM CYLINDER PIN MAXIMUM TOLERANCE — 0.125 Inch (3mm)	Industry Standard	As found Visual
	Check BOOM CYLINDERS for proper operation and good condition	API RP 2D	(✓) YES ( ) NO
	Check Boom cylinder barrels and rods for leaks, mechanical damage and corrosion	Industry Standard	(✓) YES ( ) NO
	Check and measurement boom foot pin and connection pins for clearance	Industry Standard	
	BOOM FOOT PINS & BOOM BOX CONNECTER PIN TOLERANCE — 0.125 Inch (3mm)	Industry Standard	
	Boom Foot Pin Tolerance	Industry Standard	Visual. inch
	Boom Box Connecter Pin Tolerance	Industry Standard	Visual. inch
	Check connecting bolts of box boom loose, corrosion, wear, damage	OEM Manual	(✓) YES ( ) NO
	Lubricate boom foot pins and bushings	OEM Manual	(✓) YES ( ) NO
	Lubricate boom cylinder pins, bearings and bushings	OEM Manual	(✓) YES ( ) NO
	Boom function test angle/radius to correction **Note; The cylinder(s) mechanism shall be capable of elevating the boom from a minimum of zero degrees to the maximum recommended boom angle.	API RP 2C	(✓) YES ( ) NO
	Operation functional test and verify Boom Creeping down **Note ; Test at angle 60 °	Industry Standard	(✓) YES ( ) NO As found Good
Wire Rope	Determine if parts-of-line match parts of line on the load chart in the crane cabin.	API RP 2D	(✓) YES ( ) NO
	Determine if visible portion of wire rope adequately lubricated. If not lubricate wire rope	API RP 2D	(✓) YES ( ) NO
	For each layer of wire rope on drum, check that all rope is parallel and each crossover point at hoist flanges is correct	API RP 2D	(✓) YES ( ) NO
	The top layer of rope must not be lower to the flange tips 2.5 in for Smooth drum,2 in for groove drum or 2.5 times of wire rope diameter	API RP 2C	(✓) YES ( ) NO
	Inspect wire rope for, kinking, crushing, broken wires, necking down of rope diameter, worn outside wires, corroded or broken wires at end connection, cutting or unstringing.	API RP 2D	(✓) YES ( ) NO As found ok
	NoteRunning Ropes of rotation-resistant construction used in the main or auxiliary Hoist: - Four (4) Randomly distributed broken wires within 30 rope diameter - Two (2) broken wires in one stand within 6 rope diameter	API RP2D Edition 7	(✓) YES ( ) NO As found ok
	One valley break can indicate internal rope damage requiring close inspection of this section of the rope. When one or more valley breaks are found in one lay length the rope should be retired.	API RP2D Edition 7	(✓) YES ( ) NO As found ok
	Reductions for the rope diameter, from initial wire rope dimensional measurements, in a nonworking area (an area away from the sheaves) compared to the lowest diameter of rope measured in three working areas (areas where the rope regularly goes over a sheave) of more than the following is observed: — 3/64 in. (0.047 in.) (1.2 mm) for diameters up to and including 3/4 in. (19.1 mm); — 1/16 in. (0.062 in.) (1.6 mm) for diameters of 7/8 in. to 1-1/8 in. (22.2 mm to 28.6 mm); — 3/32 in. (0.093 in.) (0.8 mm) for diameter of 1-1/4 in. to 1-1/2 in. (31.8 mm to 38.1 mm); — For rope diameters greater than 1-1/2 in., a 5 % diameter loss from baseline measurement. —Wear of one-third the original diameter of the outside individual wires.	API RP2D Edition 7	(✓) YES ( ) NO As found dimension ok
	Increase in the length of an individual rope lay is observed. This increase in lay length and accompanying reduction in diameter can be caused by failure of the core. This can occur more readily in ropes or rotation-resistant construction.	API RP2D Edition 7	(✓) YES ( ) NO As found ok
	-Inspection and Verify running and standing rope from heat effect **Note; Not more than 250°C -There is evidence of heat damage from any source (i e. engine exhaust, flare towers, stress corrosion cracking, etc.). Heat can be generated by passing a rope over a frozen or non-turning sheave, contact with structural members of the crane, improperly grounded welding leads or lightning strikes	Industry Standard	(✓) YES ( ) NO As found ok
	With the boom at the highest possible angle and the main load block or overhaul ball at the water level, ensure there is a minimum of 5 wraps of wire-rope remaining on the drums. Note: (Thai law, requires minimum of 2 wraps)	API SPEC 2C / Thai Law	(✓) YES ( ) NO
	Reference: - Running rope safety factor not less than 6 for wire rope that are running wire, (Thai law; Wire rope nominal breaking strength x number parts of line / Design factor 6) - Standing rope safety factor not less than 3.5 for wire rope that are stay cables, (Thai law)	Thai Law	(✓) YES ( ) NO ( ) N/A
	Measure and record nominal diameter of "running ropes"main and auxiliary (particularly on drum, equalizer sheave and at sockets, clips and dead end points) *****Nominal = several measurements added together divided by Number of measurements*****	API RP 2D	(✓) YES ( ) NO
	Inspect wire rope and record dimension.	API RP 2D	
	MAIN WIRE ROPE OD: — FULL DRUM	OEM Manual	0.636 inch
	MAIN WIRE ROPE OD: — HALF DRUM	OEM Manual	0.646 inch
	MAIN WIRE ROPE OD: — WATER LEVEL	OEM Manual	0.636 inch
	AUX WIRE ROPE OD: — FULL DRUM	OEM Manual	0.642 inch
	AUX WIRE ROPE OD: — HALF DRUM	OEM Manual	0.642 inch
	AUX WIRE ROPE OD: — WATER LEVEL	OEM Manual	0.640 inch
	Slip-Cut 1 meter of all ropes at the wedge socket and re-wedge to prevent rust inside of wedge socket (at outward end of rope, not on hoist drum) Dead end tail length is never less than 6 inches, or: - Standard 6 to 8 Strand wire rope is not less than 7 times the rope diameter - Rotation Resistant Wire Rope is not less than 20 times the rope diameter	Company Spec/Standard	(✓) YES ( ) NO
	U-bolt and Fist Grip Clips: Extreme care should be exercised to assure proper orientation of U-bolt clips. The U-bolt segment shall be in contact with the wire rope dead-end. The orientation, spacing, torquing, and number of all clips shall be in accordance with the crane manufacture's specifications.	API SPEC 2C	(✓) YES ( ) NO

SYSTEM	TASK	Specification	Record/Reading
	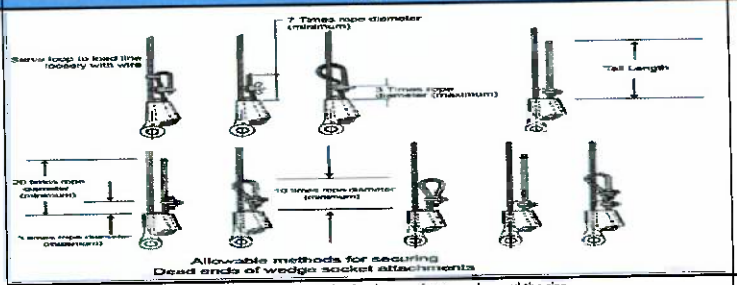 Allowable methods for securing Dead ends of wedge socket attachments	API SPEC 2C	Model and Size wedge socket. Main hoist. Model..... Size.....5/8..... Aux.Hoist. Model..... Size.....5/8.....
	Verify that the wedge socket and wedge are the correct size for the rope in use and record the size	API SPEC 2C	(✓) YES ( ) NO
Sheaves & Bearings	Lubricate all sheave bearings.	API RP 2D	(✓) YES ( ) NO
	Visually inspect all sheaves and bushings for cracks, wear and deterioration	API RP 2D	(✓) YES ( ) NO As found.....ok.....
	Visually inspect wire rope track of sheave for rope imprints, wear and deterioration. If damage exist sheave should be resurfaced or replaced.	API RP 2D	(✓) YES ( ) NO As found.....ok.....
	Pins retained by snap rings, bolt lock shafts, plates lock should be checked for missing or loose for all	API RP 2D	(✓) YES ( ) NO
	Check wirerope guards and keepers for proper location and condition.	API RP 2D	(✓) YES ( ) NO
	Determine if wire rope is jumping the sheaves, by looking for signs of damage on the sheave brim	Industry Standard	(✓) YES ( ) NO
	Sheave Rope Profile for optimum Rope life the sheave groove profile should be correctly matched to the rope diameter	Industry Standard	(✓) YES ( ) NO
	Check rope sheave should be machine grooved to adepth of not less than 1.5 times the norminal diameter of the rope	Industry Standard	(✓) YES ( ) NO
	MAIN POINT SHEAVES: Note;.....	Industry Standard	No.1 (✓) YES ( ) NO No.2 (✓) YES ( ) NO
	AUX SHEAVES: Note;.....	Industry Standard	No.1 (✓) YES ( ) NO
	IDLER SHEAVES: Note;.....	Industry Standard	AUX. (✓) YES ( ) NO Main (✓) YES ( ) NO
	Pins for bronze bushing and straight roller bearing should have a running clearnace of .031 inch/ sheave of end play and should be adjusted accordingly.(count from left)	Industry Standard	(✓) YES ( ) NO
	MAIN POINT SHEAVES:	Industry Standard	Sheave No.1.....18.....inch Sheave No.2.....18.....inch
	AUX SHEAVES:	Industry Standard	Sheave No.1.....18.....inch
	IDLER SHEAVES:	Industry Standard	Sheave AUX.....18.....inch. Sheave Main.....18.....inch.
	Ensure the sheaves are aligned and the fleet angle is correct **Remark ; Wire rope User's Manual allows 2 degree on grooved winch drum, Smooth Drum shuold be not more than 1-1/2 degree	API RP 2D	(✓) YES ( ) NO
	Determine if wire rope size and sheave sizes/grooves are compatible and record size. Sheave pitch diameter (D) to nominal wire rope diameter (d) ratio (D/d) shall not be less than 18:1	API SPEC 2C	(✓) YES ( ) NO
	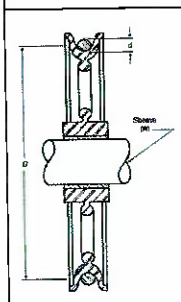 MAIN POINT SHEAVES: SHEAVE D / WIRE ROPE d = >18	API SPEC 2C	18 inch (D) 5/8 inch (d) 28.8 (Ratio D/d)
	AUX SHEAVES: SHEAVE D / WIRE ROPE d = >18	API SPEC 2C	14 inch (D) 5/8 inch (d) 22.4 (Ratio D/d)
	IDLER SHEAVES: SHEAVE D / WIRE ROPE d = > 18 (If applicable)	API SPEC 2C	18 inch (D) 5/8 inch (d) 28.8 (Ratio D/d)
	MAIN BLOCK SHEAVES: SHEAVE D / WIRE ROPE d = > 16	API SPEC 2C	16 inch (D) 5/8 inch (d) 25.6 (Ratio D/d)
Load Block	Load Block: Check the load block for cleanliness, binding sheaves, damaged or worn sheaves, worn or distorted sheave pins, broken bolts, and worn cheek weights. Note;.....	Industry Standard	(✓) YES ( ) NO As found.....ok.....
	Hook: Check the hook damage, excessive wear to the hook safety latch, hook swivel trunnions, thrust collar, securing, damage or missing lubrication fittings, proper lubrication, cracks and gouges, and if visibly bent or twisted or has been exposed to welding or arching. Note ;.....	Industry Standard	(✓) YES ( ) NO As found.....ok.....
	Hook: Tip has been bent more than 10 degree out of plane from the hook body	Industry Standard/API RP2D7	(✓) YES ( ) NO As found.....ok.....
	Inspect the Pins for bronze bushing and straight roller bearing should have a running clearnace of .031 inch/ sheave of end play and should be adjusted accordingly	Industry Standard	(✓) YES ( ) NO
	Inspect Hook or shackle to swivel case clearance is set at .031 to .062 inch, Clearance exceeding .12 to .18 (ONLY CROSBY BRAND)	OEM Crosby	(✓) YES ( ) NO
	OEM STANDARD RECOMMEND that Crane block removal from service untill replaced and repair following below	OEM STANDARD	
	- Elongated center pin and hook trunnion holes exceeding 5% of Original diameter	OEM STANDARD	(✓) YES ( ) NO As found.....ok.....

SYSTEM	TASK	Specification	Record/Reading
	-Material loss due to wear exceeding 10% of original section	OEM STANDARD	(✓) YES ( ) NO As found ok
	-Sheave wire rop groove diameter smaller than 2.5%	OEM STANDARD	(✓) YES ( ) NO As found ok
	Loosened tie bolts nuts, center pin round nuts, check weight cap screws and hook nut cap screws. Tie bolt nuts to be torqued to 35-40 ft.Lbs and restaked, all other fasteners wrench tight	OEM STANDARD	(✓) YES ( ) NO
	Throat opening - any distortion causeing an increase in throat opening of 5% not ot exceed 1/4 in. (6 mm.)(or as recommended by the manufacturer)	ASME B30.10	(✓) YES ( ) NO
	Inspect rope track worn in sheave groove, sheave must be resurface or replace	API RP 2D	(✓) YES ( ) NO
	Ensure the load block is not using "Cast Iron" cheek weights they can not be used as per API	API SPEC 2C	(✓) YES ( ) NO As found ok
	Determine if all hooks are equipped with properly operating safety latches and check for proper functioning	API RP 2D	(✓) YES ( ) NO
	Lubricate sheave bearings and swivels	OEM Manual	(✓) YES ( ) NO
	Re-thighten nut firmly to point at which trunion will just rotate, the Re-tighten set-screw in nut and thread condition as in the picture below,	Industry Standard	(✓) YES ( ) NO
	Last NDE inspection record	Industry Standard	Last inspect date _____
	RECORD LOAD BLOCK INFORMATION : Manufacturer:	OEM Manual	MCKISSICK.
	Model:	OEM Manual	M025D16EH
	Serial Number:	OEM Manual	0749392
	Record Load block measurements and details for future comparison with historical data ☒	Industry Standard	(✓) YES ( ) NO
	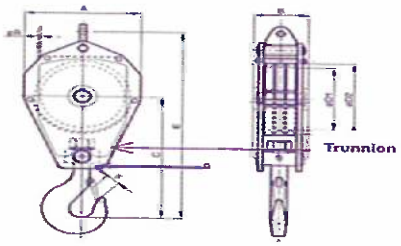 A - Block OD	Industry Standard	19.5 inch
	B - Block length	Industry Standard	14 inch
	C - Center of Pin to hook Saddle	Industry Standard	38.5 inch
	D1 - Sheave Diameter	Industry Standard	16 inch
	E - Block Width	Industry Standard	32 inch
	F - Throat Opening	Industry Standard	4 inch
	G - Trunnion	Industry Standard	0.034 inch
Aux. Ball	Inspect Auxiliary ball for cleanliness, binding swivel, work pad-eye hole. Inspect the hook damage, excessive wear to the hook safety latch, Bent connector plates,Severe corrosion pitting, hook swivel trunnions, thrust collar, securing, damage or missing lubrication fittings,Loose, missing or damaged retaining nuts, cotter pins or swivel set screws ,Missing or illegible rating and warning tags, proper lubrication, cracks and gouges, and if visibly bent or twisted or has been exposed to welding or arching.	Industry Standard	(✓) YES ( ) NO
	Hook: Tip has been bent more than 10 degree out of plane from the hook body	Industry Standard/API RP2D7	(✓) YES ( ) NO
	OEM STANDARD recommend that Crane overhaul ball removal from service untill replaced and repair following below	OEM STANDARD	
	- Elongated ball pin holes, hook latch pin holes and swivel eye exceeding 5% of original diameter.	OEM STANDARD	(✓) YES ( ) NO As found ok
	-Swivel end play gap exceeding .08". Excessive end play indicates damaged internal set screw	OEM STANDARD	(✓) YES ( ) NO As found ok
	-Material loss due to wear exceeding 10% of original section	OEM STANDARD	(✓) YES ( ) NO As found ok
	Throat opening - any distortion causeing an increase in throat opening of 5% not ot exceed 1/4 in. (6 mm.)(or as recommended by the manufacturer)	ASME B30.10	(✓) YES ( ) NO
	All hooks that lift personnel are to have a positive locking safety latch **locking Pin to be used while lifting personnel**	API RP 2D	(✓) YES ( ) NO
	*** Temperature Effected : When hooks are to be used at temperature above 400° F. (204°C) or below -40°F (-40°C), the hook manufacturer or a qualified person should be consulted *** Chemically Active Environment : The strength of hooks can be affected by chemically active environments, such as caustic or acid substances or fumes. The hook manufacturer or qualified person should be consulted before hooks are used in chemically active environment	ASME B30.10	
	Verify to ensure nut firmly at which trunion rotate. Identify to set-screw in nut/ swivel/ counter pin and thread condition.	Industry Standard	(✓) YES ( ) NO
	Last NDE inspection record	Industry Standard	Last inspect date _____
	RECORD AUX BALL INFORMATION : Manufacturer:	OEM Manual	MCKISSICK.
	Model:	OEM Manual	MB077200
	Serial Number:	OEM Manual	8029133
	Record Auxiliary Ball measurements and details for future comparison with historical data: For Model MB077200E ONLY	Industry Standard	
	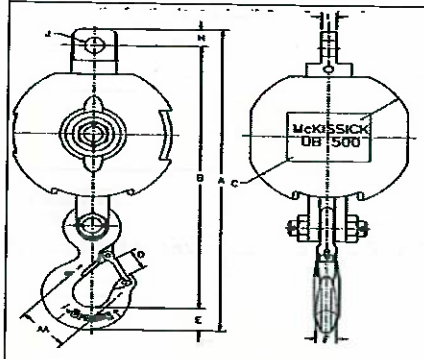 AA Dimensions 3.0 Inch	Industry Standard	3.0 inch
	A Dimensions 24.89 Inch	Industry Standard	24.8 inch
	B Dimensions 21.71 Inch	Industry Standard	21.8 inch
	C Dimensions 12.50 Inch	Industry Standard	12.5 inch
	D Dimensions 1.61 Inch	Industry Standard	1.6 inch
	E Dimensions 1.81 Inch	Industry Standard	1.8 inch
	F Dimensions 1.38 Inch	Industry Standard	1.3 inch
	H Dimensions 1.38 Inch	Industry Standard	1.3 inch
	I Dimensions 0.88 Inch	Industry Standard	0.88 inch
	J Dimensions 1.31 Inch	Industry Standard	1.3 inch
Safety system	Check Condition anti - two block , hanging chain ,eye bolts , fix bolts , shackle for missing , corrosion , erosion , deformation	API RP 2D	(✓) YES ( ) NO
	Check anti - two block kick out plate for freely movement	Company Spec/Standard	(✓) YES ( ) NO
	Check anti-2-block device proper function of Main winch	Company Spec/Standard	(✓) Function ( ) False

SYSTEM	TASK	Specification	Record/Reading
	Check anti-2-block device proper function of Aux. winch	Company Spec/Standard	(✓) Function ( ) False
	Check relation of boom radius and boom angle (lowest, middle, highest) with refrence to load chart. Recharge fluid W-15 to load indicator, if required.	API RP 2D	( ) YES ( ) NO
	Functional test of emergency lowering system (See procedure in Emergency Load Lowering Box). Note: Keep for 1 Yr PM to sustain crane mechanic competency. Caution: Function test must be performed on top deck with max 2-foot height.	Company Spec/Standard	(✓) YES ( ) NO ( ) N/A
	Visually check emergency load lowering kit. Ensure EMERGENCY LOWERING PROCEDURE and MATERIAL LIST are in the box. - Ensure ALL items shown on the list are in the box and in good condition KEEP IN SHOP. - SECURE THE BOX WITH A TIE WRAP.	Company Spec/Standard	(✓) YES ( ) NO ( ) N/A
Slew Mechanism	Visually check for damage and excessive wear on gear teeth	OEM Manual	( ) YES ( ) NO
	Visually check slew gear box in the area of oil seal for any leaks	API RP 2D	( ) YES ( ) NO
	RECORD SLEW GEAR BOX INFORMATION : Manufacturer:	OEM Manual	ROTEX
	Model:	OEM Manual	
	Serial Number:	OEM Manual	
	CHECK and RE-TORQUE swing drive gearbox mounting bolts at following brands: - ESKRIDGE, Model: 250 = 150 FT-LBS	API RP 2D	(✓) Yes ( ) No
	Check swing gearbox oil level/condition, top up if required	OEM Manual	(✓) YES ( ) NO
	Monitor slew gearbox oil condition by visually examine for burnt smell, metal particles, and/or other contaminants, record and change if found. (Meropa 220)	OEM Manual	(✓) CHANGE OIL ( ) NOT CHANGE OIL
	Change slew gear box oil (Meropa 220)	OEM Manual	(✓) CHANGE OIL ( ) NOT CHANGE OIL
	Grease all pivot points of slew ring (bearing)	OEM Manual	(✓) YES ( ) NO
	Grease open gears (pinion)	OEM Manual	(✓) YES ( ) NO
	Rotate crane 360 degree and check smoothness of operation	OEM Manual	(✓) YES ( ) NO
	Check swing drive static parking brake for proper operation Caution: DO NOT stop the swing of the crane with this static brake (parking brake)	OEM Manual	(✓) YES ( ) NO
	Check swing drive dynamic parking brake for proper operation	OEM Manual	(✓) YES ( ) NO
	Check swing lock mechanism condition; corrosion, dent, loss all part, worn and wear	OEM Manual	(✓) YES ( ) NO As found condition ok
	Check swing lock mechanism freely lock and unlock for function. **Check and inspect for hydraulic for leaks on actuator model.**	OEM Manual	(✓) YES ( ) NO As found condition ok
	Check condition of slew ring bolts e.g. Bolt grade and washers. Caution: Use only hardened flat washers under head of bolt. Do not use lock washers, or regular flat washers.	Industry Standard	(✓) YES ( ) NO As found condition ok
	Monitor bearing grease sample. If found wear and tear particles, take sample and send to lab. **Wear assessment by grease sample analysis—wear may be monitored by periodic grease sample analysis as describe in this section. Grease samples should be collected every twelve months as a minimum and the results of the analysis recorded; this period should be shortened if obvious metal or contaminants are present.	API PR 2D	( ) SEND TO LAB (✓) NOT SEND TO LAB As found ok
	Verify crane condition and load test as separate procedure.	API 2C	(✓) YES ( ) NO Specific test load 3000 lbs.
	Verify crane condition and load test as separate procedure. " Record crane load test in load test form."	Company Standard	(✓) YES ( ) NO

Table 1—Static/Onboard Test Load and Radius

Static/Onboard Rated Load at a Specific Radius lb (kg)	Test Loads in Excess of Static/Onboard Rated Load at a Specific Radius
≤ 40,000 (18,144)	25 %
> 40,000 ≤ 100,000 (>18,144 ≤ 45,356)	10,000 lb (4536 kg)
> 100,000 (45,356)	10 %

Risk Level Definitions: The following 3 levels indicate the impact the noted deficiency poses to the operation or structural integrity of the equipment:

Level 1 = Incidental	Level #2 = Restricted Operation	Level #3 =Out of Service
Minor deficiency that is recommended to be promptly addressed, but poses no safety and/or environmental risk. The crane can still be operated at full duty.	Deficiency identified that has the potential to limit, de-rate or damage the crane, its surroundings and/or the environment. The duty and locked/ tagged out until the crane's duty and operation should be de-rated or service restricted.	The crane should be removed from duty and locked/ tagged out until the deficiency is rectified.

System:	Risk Level:	Component: / Location:	WATER TEMP. CABIN / ENGINE	In Accordance with: / Date Originated:	
Description:	WATER TEMP. GAUGE DAMAGED				
Recommended Action:	NEED TO ORDER PART AND REPLACE				
Recommended urgency timeframe for corrective action:		Completed Date:		Completed By:	

System:	Risk Level:	Component: / Location:	HYD. HOSE DEV. MAIN	In Accordance with: / Date Originated:	
Description:	HYD. HOSE -24x120" : DEV. MAIN TO RETURN MANIFOLD. QTY. 1 SET				
Recommended Action:					
Recommended urgency timeframe for corrective action:		Completed Date:		Completed By:	

System:	Risk Level:	Component: / Location:	CRANE BOOM LIGHTING BOOM UPPER.	In Accordance with: / Date Originated:	
Description:	CRANE BOOM LIGHTING AT BOOM UPPER NEED TO REPLACE LED TYPE				
Recommended Action:					

SYSTEM	TASK	Specification	Record/Reading

Recommended urgency timeframe for corrective action:		Completed Date:		Completed By:	

System:	Risk Level:	Component:	CABIN GLASS.	In Accordance with:	
		Location:	CABIN.	Date Originated:	
Description:	CABIN GLASS RIGHT SIDE BROKEN. Q'ty 1 EA.				
Recommended Action:					
Recommended urgency timeframe for corrective action:		Completed Date:		Completed By:	

System:	Risk Level:	Component:		In Accordance with:	
		Location:		Date Originated:	
Description:					
Recommended Action:					
Recommended urgency timeframe for corrective action:		Completed Date:		Completed By:	

System:	Risk Level:	Component:		In Accordance with:	
		Location:		Date Originated:	
Description:					
Recommended Action:					
Recommended urgency timeframe for corrective action:		Completed Date:		Completed By:	

Sheet: 200B-50 Eng 3304 DI_Rev.2024 3-6 Jan 25

CRANE Mfg. : Nautilus
MODEL: 200B-50
SERIAL NUMBER : Crane Specific

LOCATION BEWE

C2 / BEWD ,BEWE ,BEWG ,BEWH ,BEWI ,MAWA

DATA BASE - PM JOB TASK CARD

Crew Size: 4
Estimated Hours:

SYSTEM	TASK		Specification	Record/Reading
	JOB PREPARATION			
Safety	Perform Job Safety Analysis (JSA)		Company Spec/Standard	(✓) YES ( ) NO
	Obtain "COMPANY" PERMIT TO WORK		Company Spec/Standard	(✓) YES ( ) NO
	Perform Tool Box Talk		Company Spec/Standard	(✓) YES ( ) NO
	BEFORE/AFTER JOB EXECUTION: Ensure to comply with isolation procedure (LOCK OUT/TAG OUT, WARNING SIGNS and BARRIERS).		Company Spec/Standard	(✓) YES ( ) NO
Required Tools	Insure proper tools are available at the job site		Company Spec/Standard	(✓) YES ( ) NO
	Tool bag		Company Spec/Standard	(✓) YES ( ) NO
	Tool box		Company Spec/Standard	(✓) YES ( ) NO
	Tool Container		Company Spec/Standard	(✓) YES ( ) NO
	MPI equipment and operator		Company Spec/Standard	(✓) YES ( ) NO
	Check safety harness Software and Hardware should be good condition before use		Company Spec/Standard	(✓) YES ( ) NO
	Check Rescue Equipment ready to use onsite		Company Spec/Standard	(✓) YES ( ) NO
	Portable Scaffolding and Crew if require		Company Spec/Standard	(✓) YES ( ) NO
Lubricants	Insure proper lubricants and consumables are available at the job site.		Company Spec/Standard	(✓) YES ( ) NO
	Hydraulic System - Hydraulic Oil	Rando HD-68	OEM Manual	(✓) YES ( ) NO
	Slew Gearbox - Gear Oil	Meropa 220	OEM Manual	(✓) YES ( ) NO
	Auxiliary Hoist - Gear Oil	Meropa 220	OEM Manual	(✓) YES ( ) NO
	Main Hoist - Gear Oil	Meropa 220	OEM Manual	(✓) YES ( ) NO
	Grease Points - Lithium Based **IT MUST NOT INCLUDE MOLYBDENUM DISULPHIDE**	MULTIFAK EP#2	OEM Manual	(✓) YES ( ) NO
	Open Gear Teeth - Open Gear Lube highly water resistant and of an adhesive nature.	OMEGA 73	OEM Manual	(✓) YES ( ) NO
	Pneumatic Lubricator	SAE Grade 10	OEM Manual	( ) YES (✓) NO
	Wire rope Lubricant Company preferred grade	Birlube 70	OEM Manual	(✓) YES ( ) NO
	Engine Oil - SAE Grade 15W-40 (Delo Gold)	15W-40	OEM Manual	(✓) YES ( ) NO
	Safe Load Indicator fluid	W-15	OEM Manual	(✓) YES ( ) NO
	Engine Radiator - Should have radiator preservatives additives	Cat® SCA	OEM Manual	(✓) YES ( ) NO
Consumables	Spray Cold Galvanize		Company Spec/Standard	(✓) YES ( ) NO
	Denso Tape		Company Spec/Standard	(✓) YES ( ) NO
	WD-40		Company Spec/Standard	(✓) YES ( ) NO
History Review	Before starting work, tasks preparation at least 1 day prior to starting work: 1. Review history PM/ CM from Roving Team, 2. Review last PM/ CM/ PMI from Crane Mech, 3. List out all punch list and prepare parts. 4. Review last Certificate task performed		API RP 2D	(✓) YES ( ) NO
	Require to update part history from Crane Mech on following main compenents to ensure the right parts are prepared: - Aux/ Main/ Boom Cylinder, Engine, Swing Gearbox, etc. Reference: Crane OEM information of each part need to be recorded - Manufacturer & Contact info - Model & serial number - Installation date		Company Spec/Standard	(✓) YES ( ) NO
	Review history data from Certificates and incorporate into current PM: - Pull Test Certificates (ongoing update, 4 yr. history). - Load Test Certificates (ongoing update, 4 yr. history). - Wire Rope Certifications (running rope and standing rope) (life of rope). - Hoist Certifications for hoist classified as "personnel handling" hoist.		API RP 2D	(✓) YES ( ) NO
	Review Last Preventative Maintenance Records (Inspection Reports) - Pre-use (Pre-Post Inspection) - 6 Monthly (API RP 2D Not Defined, Company Standard) - 1 Yearly (API RP 2D Defined Annual Inspection)		API RP 2D	(✓) YES ( ) NO
Lifting Gear Preparation	Visually Inspect (Sling, sling hooks and shackles) include Webslling / Chain		Company Spec/Standard	(✓) YES ( ) NO
	Check color code / Tag & date inspection		Company Spec/Standard	(✓) YES ( ) NO
	PM JOB STARTING			
General	Determine if access route to-from crane is clean, safe, unobstructed and adequately protected against falls, tripping and slipping		Company Spec/Standard	(✓) YES ( ) NO
	Check drain lines and drip pans for deterioration		API RP 2D	(✓) YES ( ) NO
	Remove any sediment collected in the bottom of drip pans		Industry Standard	(✓) YES ( ) NO
	Check for general crane and components for loss of protective coating and corrosion		Industry Standard	(✓) YES ( ) NO
	Check for missing or loose ,corrosion, deformation pins, pin keepers, bolts, nuts, fasteners of all laders, cages and working platform		API RP 2D	(✓) YES ( ) NO
	Apply grease to exposed grease parts (control valve spools, ball-ring gear, parking brake valve, etc.)		OEM Manual	(✓) YES ( ) NO
Prime Mover	**Engine Caterpillar**		OEM Manual	(✓) YES ( ) NO
	CATERPILLAR MODEL 3304 DI	S/N.:	OEM Manual	10E05209
		AR.No.:	OEM Manual	1W3491
	Change engine lube oil & oil filter and check the condition of old oil. As found ; Not Contaminated		OEM Manual	(✓) YES ( ) NO
	Check diesel tank level, top up if required.		OEM Manual	(✓) YES ( ) NO
	Check / Clean crankcase breather cap. Change if required		OEM Manual	(✓) YES ( ) NO
	Check / Clean air cleaner filter, Replace if require. (Note : Include inspect air cleaner housing)		OEM Manual	(✓) YES ( ) NO
	Check condition and inspect of the radiator and cap.		OEM Manual	(✓) YES ( ) NO
	Check for any signs of leaks on or around the engine ie; Crankshaft seal for front & rear seal , Engine oil cooler. As found; Good		OEM Manual	(✓) YES ( ) NO
	Check condition exhaust system for leaks, corrosion, insulation and general. As found ; Good		OEM Manual	(✓) YES ( ) NO
	Check condition of all engie hoses and tube. (Fuel supply,Cooling system and Lube oil system. As found; Good		OEM Manual	(✓) YES ( ) NO

[redacted] / 9 Jan 25

SYSTEM	TASK			Specification	Record/Reading
	Drain water and sediment form diesel tank. As found ; Not Contaminated			OEM Manual	(✓) YES ( ) NO
	Check / Clean Diesel tank level sightglass and diesel tag.			OEM Manual	(✓) YES ( ) NO
	Apply grease of fan bearing/shaft.			OEM Manual	(✓) YES ( ) NO
	Check and inspect the vibration damper and pulley. As found ; Good			OEM Manual	(✓) YES ( ) NO
	Change water coolant and check condition base of water coolant and record PH.			OEM Manual	( ) YES ( ) NO
	COOLANT PARAMETERS (PH):	6 or higher		OEM Manual	PH = 7
	Determine if engine hour meter is working and giving accurate measurements and record:			OEM Manual	
	HOUR METER PARAMETERS:	LAST READING	1202 HRS	OEM Manual	1202 HRS
	Check and retigthen the bolts of all engine base. / Inspection mouting rubber. As found ; Good			OEM Manual	(✓) YES ( ) NO
	Inspect the engine fan blades that there is a break is it severely distorted or rusted. As found ; Good			OEM Manual	(✓) YES ( ) NO
	Change and adjust the tension engine belts. Remark; To check belt Tension, after has engine run more than 30 minutes apply 400 N (90 lbs) of force midway between the pulleys. Correctly adjusted belts with deflect 13 to 19 mm (1/2 to 3/4 inch).			OEM Manual	(✓) YES ( ) NO
	Check engine HYD starter drive gear bendix and fly wheel gear teeth condition and record. **Replace if required"			OEM Manual	(✓) YES ( ) NO Bendix Gear : 75 % Fly wheel gear teeth : 89 %
	Check and inspect condition the Bendix of hydraulic Starter motor.			OEM Manual	(✓) YES ( ) NO
	Lubricate and check engine throttle system.			OEM Manual	(✓) YES ( ) NO
	Determine if the tachometer operates properly: Record Value of Idle & Max Speed (RPMs) Note: Too low Idle (RPMS) will cause excessive worn at winch brake			OEM Manual	
	ENGINE RPM SPECIFIC	IDLE SPEED	850-950 RPM	OEM Manual	850 RPM
		MAX SPEED	2200 RPM	OEM Manual	2300 RPM
	Confirm engine oil pressure as per Parameters below and Record Value:			OEM Manual	
	ENGINE OIL PRESSURE SPECIFIC	Minimum	Not lower then 30 PSI	OEM Manual	30 PSI
		Maximum	70 PSI	OEM Manual	70 PSI
	Confirm engine fuel pressure Parameters are correct and Record Value:			OEM Manual	
	ENGINE FUEL PRESSURE SPECIFIC** * *Note;Fuel pressure at high idle is lower than 105 kPa (15 psi)RAMETERS	Normal	Green Range / 15 psi	OEM Manual	(✓) YES ( ) NO
	Confirm engine temperature Parameters and Record Value:			OEM Manual	
	ENGINE WATER TEMP SPECIFIC	NORMAL	120 - 180 degrees F	OEM Manual	190 F
	Test engine SAFETY DEVICE- ensure engine kill cable shuts off FUEL supply			API RP 2D	(✓) Function ( ) False
	Test engine SAFETY DEVICE- ensure EMERGENCY KILL CABLE - shuts off AIR supply			API RP 2D	(✓) Function ( ) False
	Test engine SAFETY DEVICE- ensure ENGINE low lube oil - releases OIL PRESSURE to ctivate ~~*Alarm Air System~~ ***Note*** Engine oil pressure low alarm at 20 PSI			Company Spec/Standard	(✓) Function ( ) False
	Test engine SAFETY DEVICE- ensure HIGH TEMP - releases OIL PRESSURE to activate ~~Alarm Air System~~			Company Spec/Standard	(✓) Function ( ) False
	Change water separator filter.			OEM Manual	(✓) YES ( ) NO
	Check the general conditionand functioning of turbocharger. Note;			OEM Manual	(✓) Leak (✓) Not Leak
	Change fuel filter and inspect the primary hand pump.			OEM Manual	(✓) YES ( ) NO
	Check water temperator regulator.(Thermostat). Change if require refer from cooling temperature.			OEM Manual	(✓) YES ( ) NO
	Check general condition the Governor and control linkage. (Inspect the throtle linkage)			OEM Manual	(✓) YES ( ) NO
	Check condition of water pump housing.			OEM Manual	(✓) YES ( ) NO
	Check timing point (Timing mark & Injection pump)			OEM Manual	(✓) YES ( ) NO
	Check or adjust the engine valve lash. (Intake vale = 0.015", Exhaust valve = 0.025")			OEM Manual	(✓) YES ( ) NO
	Check condition wear of pump drive spline and record **Note; Remaining 70% of Original Spline Surface must be replace.			Company Spec/Standard	80 % Remaining
	Check condition wear of adaptor Coulping spline shaft and record **Note; Remaining 70% of Original adaptor Coulping spline shaft Surface must be replace.			Company Spec/Standard	95 % Remaining
	Check condition wear of Coulping spline and record. Re-tigthen of all lock bolts. **Note; Remaining 70% of Original adaptor Coulping spline shaft Surface must be replace.			Company Spec/Standard	90 % Remaining
Hydraulic Start System (Apply for C2-Remote P/F Only)	**Check pressure system** at the pressure gauge which should reach 3,000 PSI as standard when the system is FULLY charged. Record Value. (As the system cools down, the pressure should drop slightly and finally stabilised.)			OEM Manual	(✓) YES ( ) NO
	Visually inspect all hydraulic connections and hoses for leaks and retighten if necessary. (Caution: This should NOT be done if the system is under pressure.) 1. Slowly release system pressure by loosening the bleed screw on top of the hand pump. 2. Ensure no pressure remains, retighten the suspected leak fitting or replace the damaged hose or component. 3. Retighten the bleed screw on the hand pump. 4. Pump the system up to 2200 - 2600 PSI 5. Inspect that the leak was eliminated.			OEM Manual	(✓) YES ( ) NO
	Function check Accumulator Pre-charge. (Caution: This should NOT be done if the system is under pressure.) 1. Shut the engine off, release system pressure via the bleed screw on top of the hand pump 2. Retighten bleed screw and actuate the hand pump. The pressure will rapidly increase and then stabilised. This pressure is related to accumulator gas pre-charge pressure. 4. If the pressure rapidly increase to 3000 PSI, it indicates that the accumulator has lost its gas charge. 5. Troubleshoot as necessary			OEM Manual	(✓) YES ( ) NO
	Check function rechaging system by function boom down while the engine running. 1. The crane engine is running at 1,000-1500 RPM. 2. Slowly control lever boom function down for charging pressure to accumulator. 3. This pressure should read on prssure gauge between 2200 - 2600 PSI depending on the recharge ratio 80% std. (90% optional). Record Pressure Value.			OEM Manual	2500 PSI
	Check Nitrogen pressure in Accumulator ***Note**spec @ 1,500 psi as follow schematic and if found pressure loss below 1400 PSI then prepare recharge nitrogen in system			OEM Manual	1400 PSI

[redacted] / 9 Jan 25

SYSTEM	TASK	Specification	Record/Reading
	Every 36 months or 2000 engine running hours (approximately 1500 starts) replace the high pressure filter.	OEM Manual	(✓) YES ( ) NO
Pneumatic System	Check for noisy compressor operation, which could indicate a worn drive gear coupling, a loose pulley or excessive internal wear	OEM Manual	( ) YES ( ) NO
	Check Air Compressor external oil supply and return lines, if applicable, for kinks, bends, or restrictionsto flow	OEM Manual	( ) YES ( ) NO
	Inspect the Air compressor discharge port, inlet cavity and discharge line for evidence of restrictions and carboning. (If excessive buildup is noted) N/A	OEM Manual	( ) YES ( ) NO
	Check all hose connections are sound and all mounting and pivoting connections are secure.	OEM Manual	( ) YES ( ) NO
	Check condition / Clean and lubricate unloading valve	OEM Manual	( ) YES ( ) NO
	Check proper air pressure is available for the system. Record Value	OEM Manual	
	AIR SYSTEM PARAMETERS: MAX 60 PSI	OEM Manual	_____ PSI
	Visually inspection condition of air receiver for signs of corrosion or loose of structural integrity.	Industry Standard	( ) YES ( ) NO
	Check the hose, piping and tubing for mechanical damage, corrosion, splits, blisters, cracking or excessive abrasion on the outer surface	Industry Standard	( ) YES ( ) NO
	Drain off air filter and reciever to remove condensed water. If water is present, drain until water is removed.	Industry Standard	( ) YES ( ) NO
	Check proper operation of pop off valve, by manually functioning valve.	Industry Standard	( ) YES ( ) NO
	Check proper operation of manual latch valve, by manually functioning latch.	Industry Standard	( ) YES ( ) NO
	Check proper operation of small engine alarm horn.	Industry Standard	( ) YES ( ) NO
Hoist / Brakes	Visually check a hoist exhibits erratic operation and/or unusual noise, the hoist must be taken out of service until it is inspected and serviced by a qualified technician. Continued operation of a hoist with a defect in a critical component may lead to loss of load control, property damage, serious injury or death.	OEM Manual	(✓) YES ( ) NO
	Visual exteriors of hoist, frames, drums and flanges for damage, leaks, cracks and wear and repair/replace as required to maintain the structural integrity of the hoist.	OEM Manual	(✓) YES ( ) NO
	Check all hoist mounting pins, bolts or other fasteners and replace or tighten as necessary.	OEM Manual	(✓) YES ( ) NO
	Lubricant level must be maintained between the minimum and maximum levels; midway up sight glass or at bottom of level plug port as equipped and check/clean plug vent. **Use only the recommended type of lubricant.**	OEM Manual	(✓) YES ( ) NO
	Inspect Brake Valve Opening Pressure test V/V 1-1/4" PD Series : no lower than 550 PSI V/V 1-1/2" CH Series : no lower than 575 PSI — Main	Braden Bulletin 527-Dec,1996	600 PSI
	Aux		600 PSI
	Inspect Brake cylinder opening pressure test. CH/PD Series : 400-450 PSI. — Main	Industry Standard	400 PSI
	Aux		400 PSI
	Measure differancian of static and dynamic brake. CH/PD Series : 150-250 PSI. — Main	Industry Standard	200 PSI
	Aux		200 PSI
	Check for external oil leaks and repair as necessary. **This is extremely important due to the accelerated wear that will result from insufficient lubricating oil in the hoist.**	OEM Manual	(✓) YES ( ) NO
	RECORD BOOM CYLINDER INFORMATION : — Boom cylinder Diameter:	OEM Manual	DIA: 11 Inch
	CY Number:	OEM Manual	L=0352-A1 R=0352-A1
	Serial Number:	OEM Manual	L=9580 R=9579
	RECORD MAIN HOIST INFORMATION : — Manufacturer:	OEM Manual	Braden
	Model:	OEM Manual	CH185A-36110-01 M-1
	Serial Number:	OEM Manual	D100282
	Check MAIN HOIST for proper operation and good condition	API RP 2D	(✓) YES ( ) NO
	Brake test & record pressure of MAIN HOIST.	OEM Manual	(✓) YES ( ) NO As found Standard
	Change main hoist gear oil and inspect for small particles in the old oil. ** Refer to Onsite Gear Oil Sample Procedure ** ** Replace and send oil sample to SKL if abnormal ** ** Take photo of Oil Sampling for Reference**	OEM Manual	(✓) YES ( ) NO As found Not Send SKL LAB
	RECORD AUXILIARY HOIST INFORMATION : — Manufacturer:	OEM Manual	Braden
	Model:	OEM Manual	PD12C-290SA-02-1
	Serial Number:	OEM Manual	157343
	Check AUXILIARY HOIST for proper operation and good condition	API RP 2D	(✓) YES ( ) NO
	Brake test & record pressure of AUXILIARY HOIST	API RP 2D	(✓) YES ( ) NO
	Change Aux. hoist gear oil and inspect for small particles in the old oil. ** Refer to Onsite Gear Oil Sample Procedure ** ** Replace and send oil sample to SKL if abnormal ** ** Take photo of Oil Sampling for Reference** Please record if any abnormal condition. Note.....	OEM Manual	( ) SEND SKL LAB (✓) NOT SEND SKL LAB
	Check pressre relief Valve: Determine hoistes' relief valve pressure gauge is working and giving accurate measurement by notice whether pressure gauge is vibrating or not. If not, set relief valve pressure in accordance with the schematic and parameters below. Record all readings.	OEM Manual	(✓) YES ( ) NO
	BOOM RELIEF VALVE TEST — Relief Specific: 3,000 PSI	OEM Manual	3000 PSI
	MAIN HOIST RELIEF VALVE TEST — Relief Specific: 2,950 PSI	OEM Manual	2950 PSI
	AUX HOIST RELIEF VALVE TEST — Relief Specific: 2,950 PSI	OEM Manual	2950 PSI
	SWING RELIEF VALVE TEST — Relief Specific: 1,200 PSI	OEM Manual	1200 PSI
	Measure Pressure of hoist motor case drains and Record Value **Reference Bulletin: BRADEN Inspection, Testing, Preventive Maintenance and Special Operating Instructions For Planetary Hoists PB-308 latest edition for further details.**	OEM Manual	
	MAIN HOIST CASE DRAIN for Gear Motor (Down Mode). — PRESSURE < 100 psi	Company Spec/Standard	15 PSI
	AUX. HOIST CASE DRAIN for Gear Motor (Down Mode). — PRESSURE < 100 psi	Company Spec/Standard	10 PSI
Hydraulic System	Check hydraulic tank oil level. Oil should be visible in the sight glass. Top up as required (3/4 Tank Minimum)	OEM Manual	(✓) YES ( ) NO

[redacted] / 9 Jan 25

SYSTEM	TASK				Specification	Record/Reading
	Check hydraulic oil condition. (Check if running hours are more than 100 hours from last oil change or during Annual inspection) ** Refer to Onsite Hydraulic Oil Sample Procedure ** ** Replace and send oil sample to SKL if abnormal ** ** Take photo of Oil Sampling for Reference**			Rando HD-68	Company Spec/Standard	( ) SEND SKL LAB (✓) NOT SEND SKL LAB
	Inspect hydraulic tank and strainer filter. Change hydraulic oil, if required with lab confirmation.				Company Spec/Standard	(✓) YES ( ) NO
	Drain off 1 liter of oil to remove condensed water. If water is present, drain until water is removed and top up with clean oil				Industry Standard	(✓) YES ( ) NO
	Check for any hydraulic leaks				Industry Standard	(✓) YES ( ) NO
	Check the hydraulic hose, piping and tubing for mechanical damage, corrosion, splits, blisters, cracking or excessive abrasion on the outer surface				API RP 2D	(✓) YES ( ) NO
	Check that all hydraulic hose connections are sound and that all mounting and pivoting connections are secure.				Industry Standard	(✓) YES ( ) NO
	Lubricate hydraulic swivel in pedestal and insure tie down restrains are in place and preventing the swivel from rotating with the crane structure.				OEM Manual	(✓) YES ( ) NO
	Ensure the filler breather on tank is not covered or clogged				Industry Standard	(✓) YES ( ) NO
	Visually inspect for missing or loose pins, pin keepers, bolts, nuts, fasteners on all pumps, motors and valves.				API RP 2D	(✓) YES ( ) NO
	* Re-tighten the stud bolt of hydraulic main pump and marking the nut for checking to prevent loosening. Note : Torqe spec model P76, P75, PGP/PGM350 ,PGP/PGM330 = 200 ft-lbs. , for model PGP/PGM315 = 140 ft-lbs. and PGP/PGM365 = 450 ft-lbs.				The Commercial Intertech manual	(✓) YES ( ) NO
	Check the filter bypass indicator, while engine is running				OEM Manual	(✓) YES ( ) NO
	With engine running (after all other items pass inspection), check the system for leaks around fittings, hoses, valves and reservoirs				Industry Standard	(✓) YES ( ) NO
	With engine running, check the source of any unusual noise or vibration that may cause or indicate equipment damage or wear				Industry Standard	(✓) YES ( ) NO
	Ensure all hoses are properly rated for the system, see "Parameters" for each system for details.				Industry Standard	(✓) YES ( ) NO
	Record hydraulic oil operating temperture. Note: Hydraulic fluid overheating temperature is over 180 F degrees or 82 C, degrees (reservoir temperature)				Industry Standard	120 Degree F
	Determine if hydraulic return pressure gauge is working and giving accurate measurements. Record readings					
	RECORD HYDRAULIC RETURN PRESSURE PARAMETERS:			60 PSI "maximum"	OEM Manual	40 PSI
	Check and inspect the hydraulic return filters and seals.				OEM Manual	(✓) YES ( ) NO
	Function Testing and record pressures with engine at :			2,200 RPM	API RP 2D	
	BOOM FUNCTION TEST (Need Crane Mech to verify each platform)				OEM Manual	
	Boom Angle : 60 Degree (Recommend or as applicable)	UP	Cracking pressure	RECORD	OEM Manual	600 PSI
			Full Speed Pressure	RECORD	OEM Manual	700 PSI
		DOWN	Cracking pressure	RECORD	OEM Manual	1500 PSI
			Full Speed Pressure	RECORD	OEM Manual	2200 PSI
	MAIN HOIST FUNCTION TEST (Need Crane Mech to verify each platform)				OEM Manual	
	Boom Angle : 60 Degree (Recommend or as applicable)	UP	Cracking pressure	RECORD	OEM Manual	100 PSI
			Full Speed Pressure	RECORD	OEM Manual	900 PSI
		DOWN	Cracking pressure	RECORD	OEM Manual	900 PSI
			Full Speed Pressure	RECORD	OEM Manual	1400 PSI
	AUX HOIST FUNCTION TEST (Need Crane Mech to verify each platform)				OEM Manual	
	Boom Angle : 60 Degree (Recommend or as applicable)	UP	Cracking pressure	RECORD	OEM Manual	500 PSI
			Full Speed Pressure	RECORD	OEM Manual	700 PSI
		DOWN	Cracking pressure	RECORD	OEM Manual	700 PSI
			Full Speed Pressure	RECORD	OEM Manual	1500 PSI
	SWING FUNCTION TEST (Need Crane Mech to verify each platform)				OEM Manual	
	Boom Angle : 60 Degree (Recommend or as applicable)	LEFT	Cracking pressure	RECORD	OEM Manual	100 PSI
			Full Speed Pressure	RECORD	OEM Manual	700 PSI
		RIGHT	Cracking pressure	RECORD	OEM Manual	100 PSI
			Full Speed Pressure	RECORD	OEM Manual	700 PSI
Electrical system, Crane Boom Lighting and red obstruction light	Check the electrical junction boxes, wires and connections for deterioration, desiccant bags, (replace as required)				Industry Standard	(✓) YES ( ) NO
	Check the condition of the grounding and lighting protection system.				Company Spec/Standard	(✓) YES ( ) NO
	Visually inspect boom floodlight and light guards for loose, missing, corroded				Company Spec/Standard	(✓) YES ( ) NO
	Check condition pipe support , U-bolt ,nuts of boom floodlight and Electric slipring for loose , missing , corroded				Company Spec/Standard	(✓) YES ( ) NO
	Check Electric slipring/swivel for 360° continuous rotation				OEM Munnal	(✓) YES ( ) NO
	Check Water ingress, condensation in electric slipring, red obstruction light and boom floodlight				OEM Munnal	(✓) YES ( ) NO
	Check feely movement and lubricate of boom floodlight				OEM Munnal	(✓) YES ( ) NO
	With generator in operation, intergize all lights to unsure proper function.				API RP 2D	(✓) YES ( ) NO
	Check condition of crane boom lighting and safety net is secured with strong point. * **Safety net should be replace 24 months after installation (2 year)***			Last installation date _____	Company Spec/Standard	(✓) YES ( ) NO
	Check function of crane sound signal				Company Spec/Standard	(✓) YES ( ) NO ( ) N/A

[redacted] / 9 Jan 25

SYSTEM	TASK	Specification	Record/Reading
	Check function of crane boom lighting at boom upper section	Company Spec/Standard	(✓) YES ( ) NO ( ) N/A
	Check function of crane boom lighting at boom lower section	Company Spec/Standard	(✓) YES ( ) NO ( ) N/A
	Check function of crane boom lighting at winch skid	Company Spec/Standard	( ) YES ( ) NO (✓) N/A
	Check function of crane boom lighting at crane cabin	Company Spec/Standard	(✓) YES ( ) NO ( ) N/A
	Check function becon light at boom tip	Company Spec/Standard	( ) YES ( ) NO (✓) N/A
	Inspection wire rope guide & Roller assembly	Company Spec/Standard	(✓) YES ( ) NO
	Visually inspect red obstruction light pipe support, u-bolts, nuts connection to hand rail for loose, missing, corroded	Company Spec/Standard	(✓) YES ( ) NO
	Visually inspect safety sling attached to the red obsruction light and its base for loose, missing, corroded	Company Spec/Standard	(✓) YES ( ) NO
	Visually inspect red obstruction light function. The light is designed to turn on all the time.	Company Spec/Standard	(✓) YES ( ) NO
Operator Control Station	Check general condition of control panel, bolts, paint security, etc.	API RP 2D	(✓) YES ( ) NO
	Determine if there is a serviceable fire extinguisher in the vicinity of the crane	Company Spec/Standard	(✓) YES ( ) NO
	Determine if correct load chart is in use and easily visible for operator	API RP 2D	(✓) YES ( ) NO
	Determine if charts, indicators and hand signal chart are in the cabling and firmly attached	API RP 2D	(✓) YES ( ) NO
	Determine if angle/radius indicator plate is easily visible to operator and is moving freely.	API RP 2D	(✓) YES ( ) NO
	Check condition of control levers and determine if they "dead-man" back to the neutral position.	API RP 2D	(✓) YES ( ) NO
	Check condition of pressure gauges.	API RP 2D	(✓) YES ( ) NO
	Check proper control labels are firmly installed, completely legible and properly labeled	API RP 2D	(✓) YES ( ) NO
	Check controls for freedom-of-movement	API RP 2D	(✓) YES ( ) NO
	Check condition , Leak, freely moement of Dynamic swing break system *** Note; If HYD Oil loose in CYD reservoir must be refill*	OEM Manual	(✓) YES ( ) NO
	Check condition , Leak, freely moement of Accelerate System *** Note; If HYD Oil loose in CYD reservoir must be refill*	OEM Manual	(✓) YES ( ) NO
	Check all safety glass and rubber seal for proper condition	API RP 2D	(✓) YES ( ) NO ( ) N/A
	Function Test Horn. Note;.....N/A.....	Industry Standard	( ) YES ( ) NO (✓) N/A
	Ensure PRE/POST Check List and Pocket Manual in the cabin. Note;.....ok.....	Company Standard	(✓) YES ( ) NO ( ) N/A
Load Indicator System	Visual check on fittings and connections for leaks. Fix leak if any. Note:.....Not leak.....	OEM Manual	(✓) YES ( ) NO
	Should any leaks exist, stop leak and recharge system, refer to maintenance manual	OEM Manual	(✓) YES ( ) NO
	Change and flushing Load cell fluid.	OEM Manual	(✓) YES ( ) NO
	Check general condition of tubbing, hoses, pins bolts, paint, etc.	Industry Standard	(✓) YES ( ) NO
	Insure load cell is free of obstructions	OEM Manual	(✓) YES ( ) NO
	Check condition of gauge(s) face and clean glass as required.	OEM Manual	(✓) YES ( ) NO
	Check the scale's operation and weighing accuracy. (Main Hoist) Remark : Maximum variance +/- 2% Note;.....ok.....	Company Spec/Standard	(✓) YES ( ) NO ( ) N/A
	~~Check the scale's operation and weighing accuracy. (Aux Hoist) Remark : Maximum variance +/- 2%~~ ~~Note;.....~~	~~Company Spec/Standard~~	~~( ) YES ( ) NO ( ) N/A~~
	Check the internal casting fluid of weight indicator. top up if required	Industry Standard	(✓) YES ( ) NO ( ) N/A
	Insure SWL tag matches ratings on the Crane Load Chart.	OEM Manual	(✓) YES ( ) NO ( ) N/A
	Insure Boom Length, matches the Crane Load Chart	OEM Manual	(✓) YES ( ) NO ( ) N/A
	Insure Boom Angle measurements and readings match the boom angle indicator.	OEM Manual	(✓) YES ( ) NO ( ) N/A
	Insure Boom Radius measurements indicate the distance from center line of the crane to the hook	OEM Manual	(✓) YES ( ) NO ( ) N/A
	Check Main load cell gap 1/4 (0.250) inch	OEM Manual	(✓) YES ( ) NO ( ) N/A
	~~Check Aux load cell gap 7/8(0.280) inch. (Compression Load Cell Type)~~	~~OEM Manual~~	~~( ) YES ( ) NO ( ) N/A~~
Pedestal & Structure	Visually check **Pedestal** for chipped/cracked paint, deformation, worn parts, dents, corroded areas, cracks weld, etc.	API RP 2D	(✓) YES ( ) NO
	Check water rain drain at pedestal must be not obstuct	Industry Standard	(✓) YES ( ) NO
	Check pin and cotter pin of pedestal missing , corrosion, wear, damage and exercise pin.	Industry Standard	(✓) YES ( ) NO
	Visually check **Base - Plate connection** and **Base hoist Structure** for chipped/cracked paint, deformation, worn parts, dents, corroded areas, cracks weld, etc.	API RP 2D	(✓) YES ( ) NO
	Check A fixed such as Handrial, Walkway, Grating, stationary structure without significant movement in response to waves and currents in normal operating conditions.	API RP 2C	(✓) YES ( ) NO
	Visually check and lubricate maintenance Jib. ***Note*** If on pedestal crane	OEM Manual	(✓) YES ( ) NO ( ) N/A
	Check maintenance jib is secure firmly. ***Note*** If on pedestal crane	OEM Manual	(✓) YES ( ) NO ( ) N/A
Box Boom & Luffing CYD	Check and Verify entire box boom and Boom CYD for loss of protective coating and corrosion. Note;.....ok.....	API RP 2D	(✓) YES ( ) NO
	Check and Verify entire box boom and Boom CYD for chipped/cracked paint, deformation, worn parts, dents, corroded areas, cracks, etc. Note;.....ok.....	API RP 2D	(✓) YES ( ) NO
	Check and Verify boom end connections, for bends, dents, corroded areas, cracked welds, and signs of mechanical damage, wear, etc. **any deviation should be reported**	API RP 2D	(✓) YES ( ) NO
	Check and Verify boom rest and wooden support to ensure it's in good condition	API RP 2D	(✓) YES ( ) NO
	Inspect pin and pin holes of Upper tank and Lower tank for excessive clearance	OEM Manual	(✓) YES ( ) NO
	BOOM CYLINDER PIN MAXIMUM TOLERANCE — 0.125 Inch (3mm)	Industry Standard	As found...On Standard
	Check BOOM CYLINDERS for proper operation and good condition	API RP 2D	(✓) YES ( ) NO
	Check Boom cylinder barrels and rods for leaks, mechanical damage and corrosion	Industry Standard	(✓) YES ( ) NO
	Check and measurement boom foot pin and connection pins for clearance	Industry Standard	
	BOOM FOOT PINS & BOOM BOX CONNECTER PIN TOLERANCE — 0.125 Inch (3mm)	Industry Standard	
	Boom Foot Pin Tolerance	Industry Standard	0.070 inch
	Boom Box Connecter Pin Tolerance	Industry Standard	0.078 inch
	Check connecting bolts of box boom loose, corrosion, wear, damage	OEM Manual	(✓) YES ( ) NO
	Lubricate boom foot pins and bushings	OEM Manual	(✓) YES ( ) NO
	Lubricate boom cylinder pins, bearings and bushings	OEM Manual	(✓) YES ( ) NO
	Boom function test angle/radius to correction **Note; The cylinder(s) mechanism shall be capable of elevating the boom from a minimum of zero degrees to the maximum recommended boom angle.	API RP 2C	(✓) YES ( ) NO

[redacted] / 9 Jan 25

SYSTEM	TASK	Specification	Record/Reading
	Operation functional test and verify Boom Creeping down **Note ; Test at angle 60 °	Industry Standard	(✓) YES ( ) NO As found: Ok
Wire Rope	Determine if parts-of-line match parts of line on the load chart in the crane cabin.	API RP 2D	(✓) YES ( ) NO
	Determine if visible portion of wire rope adequately lubricated. If not lubricate wire rope	API RP 2D	(✓) YES ( ) NO
	For each layer of wire rope on drum, check that all rope is parallel and each crossover point at hoist flanges is correct	API RP 2D	(✓) YES ( ) NO
	The top layer of rope must not be lower to the flange tips 2.5 in for Smooth drum,2 in for groove drum or 2.5 times of wire rope diameter	API RP 2C	(✓) YES ( ) NO
	Inspect wire rope for, kinking, crushing, broken wires, necking down of rope diameter, worn outside wires, corroded or broken wires at end connection, cutting or unstringing.	API RP 2D	(✓) YES ( ) NO As found: Good
	NoteRunning Ropes of rotation-resistant construction used in the main or auxiliary Hoist; - Four (4) Randomly distributed broken wires within 30 rope diameter - Two (2) broken wires in one stand within 6 rope diameter	API RP2D Edition 7	(✓) YES ( ) NO As found: Good
	One valley break can indicate internal rope damage requiring close inspection of this section of the rope. When one or more valley breaks are found in one lay length the rope should be retired.	API RP2D Edition 7	(✓) YES ( ) NO As found: Good
	Reductions for the rope diameter, from initial wire rope dimensional measurements, in a nonworking area (an area away from the sheaves) compared to the lowest diameter of rope measured in three working areas (areas where the rope regularly goes over a sheave) of more than the following is observed: — 3/64 in. (0.047 in.) (1.2 mm) for diameters up to and including 3/4 in. (19.1 mm); — 1/16 in. (0.062 in.) (1.6 mm) for diameters of 7/8 in. to 1-1/8 in. (22.2 mm to 28.6 mm); — 3/32 in. (0.093 in.) (0.8 mm) for diameter of 1-1/4 in. to 1-1/2 in. (31.8 mm to 38.1 mm); — For rope diameters greater than 1-1/2 in., a 5 % diameter loss from baseline measurement. —Wear of one-third the original diameter of the outside individual wires.	API RP2D Edition 7	(✓) YES ( ) NO As found dimension: Good
	Increase in the length of an individual rope lay is observed. This increase in lay length and accompanying reduction in diameter can be caused by failure of the core. This can occur more readily in ropes or rotation-resistant construction.	API RP2D Edition 7	(✓) YES ( ) NO As found: Good
	-Inspection and Verify running and standing rope from heat effect **Note; Not more than 250°C -There is evidence of heat damage from any source (i.e. engine exhaust, flare towers, stress corrosion cracking, etc.). Heat can be generated by passing a rope over a frozen or non-turning sheave, contact with structural members of the crane, improperly grounded welding leads or lightning strikes	Industry Standard	(✓) YES ( ) NO As found: Good
	With the boom at the highest possible angle and the main load block or overhaul ball at the water level, ensure there is a minimum of 5 wraps of wire-rope remaining on the drums. Note: (Thai law, requires minimum of 2 wraps)	API SPEC 2C / Thai Law	(✓) YES ( ) NO
	Reference: · Running rope safety factor not less than 6 for wire rope that are running wire, (Thai law; Wire rope nominal breaking strength x number parts of line / Design factor 6) · Standing rope safety factor not less than 3.5 for wire rope that are stay cables, (Thai law)	Thai Law	(✓) YES ( ) NO ( ) N/A
	Measure and record nominal diameter of "running ropes"main and auxiliary (particularly on drum, equalizer sheave and at sockets, clips and dead end points) *******Nominal = several measurements added together divided by Number of measurements*******	API RP 2D	(✓) YES ( ) NO
	Inspect wire rope and record dimension.	API RP 2D	
	MAIN WIRE ROPE OD: FULL DRUM	OEM Manual	0.780 inch
	HALF DRUM	OEM Manual	0.779 inch
	WATER LEVEL	OEM Manual	0.778 inch
	AUX WIRE ROPE OD: FULL DRUM	OEM Manual	0.561 inch
	HALF DRUM	OEM Manual	0.560 inch
	WATER LEVEL	OEM Manual	0.570 inch
	Slip-Cut 1 meter of all ropes at the wedge socket and re-wedge to prevent rust inside of wedge socket (at outward end of rope, not on hoist drum) Dead end tail length is never less than 6 inches, or; - Standard 6 to 8 Strand wire rope is not less than 7 times the rope diameter - Rotation Resistant Wire Rope is not less than 20 times the rope diameter	Company Spec/Standard	( ) YES ( ) NO
	U-bolt and Fist Grip Clips: Extreme care should be exercised to assure proper orientation of U-bolt clips. The U-bolt segment shall be in contact with the wire rope dead-end. The orientation, spacing, torquing, and number of all clips shall be in accordance with the crane manufacture's specifications.	API SPEC 2C	( ) YES ( ) NO
	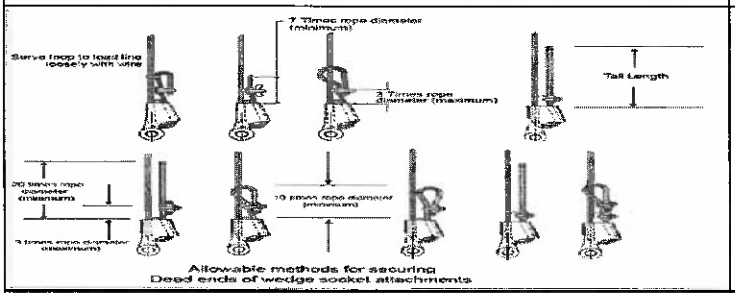	API SPEC 2C	Model ans Size wedge socket. Main hoist. Model: Size: 3/4 Aux.Hoist. Model: Size: 9/16
	Verify that the wedge socket and wedge are the correct size for the rope in use and record the size	API SPEC 2C	(✓) YES ( ) NO
Sheaves & Bearings	Lubricate all sheave bearings.	API RP 2D	(✓) YES ( ) NO
	Visually inspect all sheaves and bushings for cracks, wear and deterioration	API RP 2D	(✓) YES ( ) NO As found: Good
	Visually inspect wire rope track of sheave for rope imprints, wear and deterioration. If damage exist sheave should be resurfaced or replaced.	API RP 2D	(✓) YES ( ) NO As found: Good
	Pins retained by snap rings, bolt lock shafts, plates lock should be checked for missing or loose for all	API RP 2D	(✓) YES ( ) NO
	Check wirerope guards and keepers for proper location and condition.	API RP 2D	(✓) YES ( ) NO
	Determine if wire rope is jumping the sheaves, by looking for signs of damage on the sheave brim	Industry Standard	(✓) YES ( ) NO

[redacted] / 9 Jan 25

SYSTEM	TASK	Specification	Record/Reading
	Sheave Rope Profile for optimum Rope life the sheave groove profile should be correctly matched to the rope diameter	Industry Standard	(✓) YES ( ) NO
	Check rope sheave should be machine grooved to adepth of not less than 1.5 times the norminal diameter of the rope	Industry Standard	(✓) YES ( ) NO
	Inspect all groove of sheaves by sheave gauge , Use sheave gauge as show in figure .Grooves should have an arc of contact with the wire rope between 135 and 150 degrees. They should be tapered to permit the rope to enter and leave the groove smoothly.	Industry Standard	
	MAIN POINT SHEAVES: Note; On Standard	Industry Standard	No.1 (✓) YES ( ) NO No.2 (✓) YES ( ) NO
	AUX SHEAVES: Note; On Standard	Industry Standard	No.1 (✓) YES ( ) NO
	IDLER SHEAVES: Note; On Standard	Industry Standard	AUX (✓) YES ( ) NO Main (✓) YES ( ) NO
	Pins for bronze bushing and straight roller bearing should have a running clearnace of .031 inch/ sheave of end play and should be adjusted accordingly.(count from left)	Industry Standard	(✓) YES ( ) NO
	Confirmation the dimension (OD) of all sheaves and records	Industry Standard / API Standard	(✓) YES ( ) NO
	MAIN POINT SHEAVES:	Industry Standard	Sheave No.1 20 inch Sheave No.2 20 inch
	AUX SHEAVES:	Industry Standard	Sheave No.1 15 inch
	IDLER SHEAVES:	Industry Standard	Sheave AUX 20 inch. Sheave Main 20 inch.
	Ensure the sheaves are aligned and the fleet angle is correct **Remark ; Wire rope User's Manual allows 2 degree on grooved winch drum, Smooth Drum shuold be not more than 1-1/2 degree	API RP 2D	( ) YES ( ) NO
	Determine if wire rope size and sheave sizes/grooves are compatible and record size. Sheave pitch diameter (D) to nominal wire rope diameter (d) ratio (D/d) shall not be less than 18:1	API SPEC 2C	( ) YES ( ) NO
	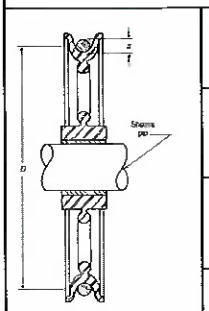 MAIN POINT SHEAVES: SHEAVE D / WIRE ROPE d = >18	API SPEC 2C	18 inch (D) 3/4 inch (d) 24 (Ratio D/d)
	AUX SHEAVES: SHEAVE D / WIRE ROPE d = >18	API SPEC 2C	14 inch (D) 9/16 inch (d) 22 (Ratio D/d)
	IDLER SHEAVES: SHEAVE D / WIRE ROPE d = > 18 (If applicable)	API SPEC 2C	18 inch (D) 3/4 inch (d) 24 (Ratio D/d)
	MAIN BLOCK SHEAVES: SHEAVE D / WIRE ROPE d = > 16	API SPEC 2C	16 inch (D) 3/4 inch (d) 21 (Ratio D/d)
Load Block	**Load Block:** Check the load block for cleanliness, binding sheaves, damaged or worn sheaves, worn or distorted sheave pins, broken bolts, and worn cheek weights. Note ;	Industry Standard	(✓) YES ( ) NO As found Good
	Hook: Check the hook damage, excessive wear to the hook safety latch, hook swivel trunnions, thrust collar, securing, damage or missing lubrication fittings, proper lubrication, cracks and gouges, and if visibly bent or twisted or has been exposed to welding or arching. Note ;	Industry Standard	(✓) YES ( ) NO As found Good
	Hook: Tip has been bent more than 10 degree out of plane from the hook body	Industry Standard/API RP2D7	(✓) YES ( ) NO As found Good
	Inspect the Pins for bronze bushing and straight roller bearing should have a running clearnace of .031 inch/ sheave of end play and should be adjusted accordingly	Industry Standard	(✓) YES ( ) NO
	Inspect Hook or shackle to swivel case clearance is set at .031 to .062 inch, Clearance exceeding .12 to .18 (ONLY CROSBY BRAND)	OEM Crosby	(✓) YES ( ) NO
	OEM STANDARD RECOMMEND that Crane block removal from service untill replaced and repair following below	OEM STANDARD	
	- Elongated center pin and hook trunnion holes exceeding 5% of Original diameter	OEM STANDARD	(✓) YES ( ) NO As found Good
	-Material loss due to wear exceeding 10% of original section	OEM STANDARD	(✓) YES ( ) NO As found Good
	-Sheave wire rop groove diameter smaller than 2.5%	OEM STANDARD	(✓) YES ( ) NO As found Good
	Loosened tie bolts nuts, center pin round nuts, check weight cap screws and hook nut cap screws. Tie bolt nuts to be torqued to 35-40 ft.Lbs and restaked, all other fasteners wrench tight	OEM STANDARD	(✓) YES ( ) NO
	Throat opening - any distortion causeing an increase in throat opening of 5% not ot exceed 1/4 in. (6 mm.)(or as recommended by the manufacturer)	ASME B30.10	(✓) YES ( ) NO
	Inspect rope track worn in sheave groove, sheave must be resurface or replace	API RP 2D	(✓) YES ( ) NO

[redacted] / 9 Jan 25

SYSTEM	TASK	Specification	Record/Reading
	Ensure the load block is not using "Cast Iron" cheek weights they can not be used as per API	API SPEC 2C	(✓) YES ( ) NO As found: Good
	Determine if all hooks are equipped with properly operating safety latches and check for proper functioning	API RP 2D	(✓) YES ( ) NO
	Lubricate sheave bearings and swivels	OEM Manual	(✓) YES ( ) NO
	Re-thighten nut firmly to point at which trunion will just rotate, the Re-tighten set-screw in nut and thread condition as in the picture below,	Industry Standard	(✓) YES ( ) NO
	Last NDE inspection record	Industry Standard	Last inspect date_____
	RECORD LOAD BLOCK INFORMATION : — Manufacturer:	OEM Manual	
	Model:	OEM Manual	
	Serial Number:	OEM Manual	
	Record Load block measurements and details for future comparison with historical data	Industry Standard	(✓) YES ( ) NO
	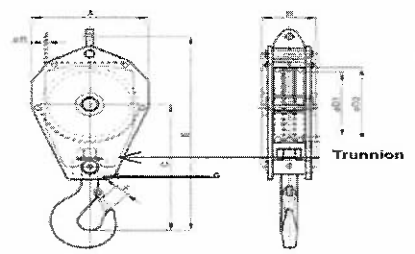 — A - Block OD	Industry Standard	19.5 mm/ inch
	B - Block length	Industry Standard	43 mm/ inch
	C - Center of Pin to hook Saddle	Industry Standard	31.5 mm/ inch
	D1 - Sheave Diameter	Industry Standard	16 mm/ inch
	E - Block Width	Industry Standard	35 mm/ inch
	F - Throat Opening	Industry Standard	7 mm/ inch
	G - Trunnion	Industry Standard	0.060 mm/ Inch
Aux. Ball	**Inspect Auxiliary ball** for cleanliness, binding swivel, work pad-eye hole. Inspect the hook damage, excessive wear to the hook safety latch, Bent connector plates,Severe corrosion pitting, hook swivel trunnions, thrust collar, securing, damage or missing lubrication fittings,Loose, missing or damaged retaining nuts, cotter pins or swivel set screws ,Missing or illegible rating and warning tags, proper lubrication, cracks and gouges, and if visibly bent or twisted or has been exposed to welding or arching.	Industry Standard	(✓) YES ( ) NO
	Hook: Tip has been bent more than 10 degree out of plane from the hook body	Industry Standard/API RP2D7	(✓) YES ( ) NO
	OEM STANDARD recommend that Crane overhaul ball removal from service untill replaced and repair following below	OEM STANDARD	
	- Elongated ball pin holes, hook latch pin holes and swivel eye exceeding 5% of original diameter,	OEM STANDARD	(✓) YES ( ) NO As found: On Standard
	-Swivel end play gap exceeding .08". Excessive end play indicates damaged internal set screw	OEM STANDARD	(✓) YES ( ) NO As found: On Standard
	-Material loss due to wear exceeding 10% of original section	OEM STANDARD	(✓) YES ( ) NO As found: On Standard
	Throat opening - any distortion causeing an increase in throat opening of 5% not ot exceed 1/4 in. (6 mm.)(or as recommended by the manufacturer)	ASME B30.10	(✓) YES ( ) NO
	All hooks that lift personnel are to have a positive locking safety latch **locking Pin to be used while lifting personnel**	API RP 2D	(✓) YES ( ) NO
	*** Temperature Effected : When hooks are to be used at temperature above 400° F. (204°C) or below -40°F (-40°C), the hook manufacturer or a qualified person should be consulted *** Chemically Active Environment : The strength of hooks can be affected by chemically active environments, such as caustic or acid substances or fumes. The hook manufacturer or qualified person should be consulted before hooks are used in chemically active environment	ASME B30.10	
	Verify to ensure nut firmly at which trunion rotate. Identify to set-screw in nut/ swivel/ counter pin and thread condition.	Industry Standard	(✓) YES ( ) NO
	Last NDE inspection record	Industry Standard	Last inspect date_____
	RECORD AUX BALL INFORMATION : — Manufacturer:	OEM Manual	MCKISSICK
	Model:	OEM Manual	MB07T200E
	Serial Number:	OEM Manual	0150357
	Record Auxiliary Ball measurements and details for future comparison with historical data: For Model MB07T200E ONLY	Industry Standard	
	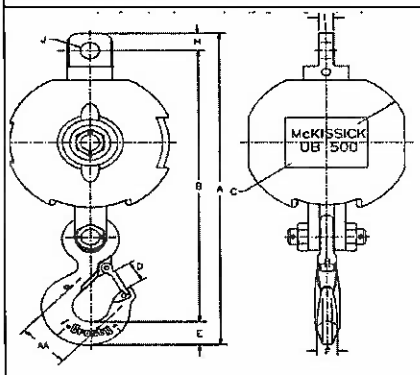 — AA Dimensions 3.0 Inch	Industry Standard	3.0 mm/ inch
	A Dimensions 24.89 Inch	Industry Standard	24.89 mm/ inch
	B Dimensions 21.71 Inch	Industry Standard	21.71 mm/ inch
	C Dimensions 12.50 Inch	Industry Standard	12.50 mm/ inch
	D Dimensions 1.61 Inch	Industry Standard	1.61 mm/ inch
	E Dimensions 1.81 Inch	Industry Standard	1.81 mm/ inch
	F Dimensions 1.38 Inch	Industry Standard	1.38 mm/ inch
	H Dimensions 1.38 Inch	Industry Standard	1.38 mm/ inch
	I Dimensions 0.88 Inch	Industry Standard	0.88 mm/ inch
	J Dimensions 1.31 Inch	Industry Standard	1.31 mm/ inch
	Record Auxiliary Ball measurements and details for future comparison with historical data: For Model OB 7EE 200-4	Industry Standard	
	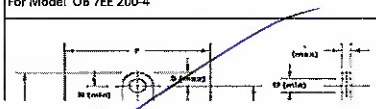 — A Dimensions 27.25 Inch	Industry Standard	mm/ inch
	B Dimensions 24.10 Inch	Industry Standard	mm/ inch

[redacted] / 9 Jan 25

SYSTEM	TASK		Specification	Record/Reading
	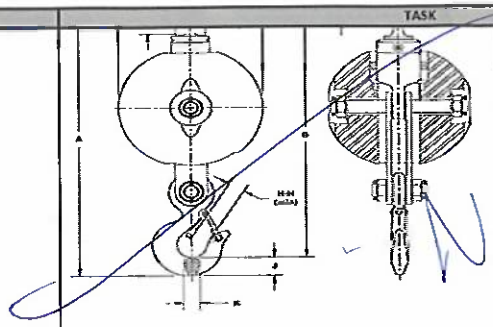	F Dimensions 12.00 Inch	Industry Standard	_____mm/ inch
		H-H Dimensions 1.38 Inch	Industry Standard	_____mm/ inch
		J Dimensions 1.81 Inch	Industry Standard	_____mm/ inch
		K Dimensions 1.46 Inch	Industry Standard	_____mm/ inch
		R Dimensions 1.55 Inch	Industry Standard	_____mm/ inch
		S Dimensions 1.34 Inch	Industry Standard	_____mm/ inch
		T Dimensions 1.03 Inch	Industry Standard	_____mm/ inch
		U Dimensions 1.31 Inch	Industry Standard	_____mm/ inch
Safety system	Check Condition anti - two block , hanging chain ,eye bolts , fix bolts , shackle for missing , corrosion , erosion , deformation		API RP 2D	( )YES ( ) NO
	Check anti - two block kick out plate for freely movement		Company Spec/Standard	( )YES ( ) NO
	Check anti-2-block device proper function of Main winch		Company Spec/Standard	( ) Function ( ) False
	Check anti-2-block device proper function of Aux. winch		Company Spec/Standard	( ) Function ( ) False
	Check relation of boom radius and boom angle (lowest, middle, highest) with refrence to load chart. Recharge fluid W-15 to load indicator, if required.		API RP 2D	( )YES ( ) NO
	Functional test of emergency lowering system (See procedure in Emergency Load Lowering Box). **Note:** Keep for 1 Yr PM to sustain crane mechanic competency. **Caution:** Function test must be performed on top deck with max 2-foot height.		Company Spec/Standard	( )YES ( ) NO ( ) N/A
	Visually check emergency load lowering kit. Ensure EMERGENCY LOWERING PROCEDURE and MATERIAL LIST are in the box. - Ensure ALL items shown on the list are in the box and in good condition - SECURE THE BOX WITH A TIE WRAP.		Company Spec/Standard	( )YES ( ) NO ( ) N/A
Slew Mechanism	Visually check for damage and excessive wear on gear teeth		OEM Manual	( )YES ( ) NO
	Visually check slew gear box in the area of oil seal for any leaks		API RP 2D	( )YES ( ) NO
	RECORD SLEW GEAR BOX INFORMATION :	Manufacturer:	OEM Manual	ESK
		Model:	OEM Manual	150 A
		Serial Number:	OEM Manual	0817-C09L-001/002
	CHECK and RE-TORQUE swing drive gearbox mounting bolts at following brands: - ESKRIDGE, Model: 250 = 150 FT-LBS		API RP 2D	( )Yes ( )No
	Check swing gearbox oil level/condition, top up if required	Meropa 220	OEM Manual	( )YES ( ) NO
	Monitor slew gearbox oil condition by visually examine for burnt smell, metal particles, and/or other contaminants, record and change if found.		OEM Manual	( ) CHANGE OIL ( ) NOT CHANGE OIL
	Change slew gear box oil		OEM Manual	( ) CHANGE OIL ( ) NOT CHANGE OIL
	Grease all pivot points of slew ring (bearing)		OEM Manual	( )YES ( ) NO
	Grease open gears (pinion)		OEM Manual	( )YES ( ) NO
	Rotate crane 360 degree and check smoothness of operation		OEM Manual	( )YES ( ) NO
	Check swing drive static parking brake for proper operation Caution: **DO NOT stop the swing of the crane with this static brake (parking brake)**		OEM Manual	( )YES ( ) NO
	Check swing drive dynamic parking brake for proper operation		OEM Manual	( )YES ( ) NO
	Check swing lock mechanism condition; corrosion ,dent , loos all part,worn and wear		OEM Manual	( )YES ( ) NO As found condition..... N/A
	Check swing lock mechanism freely lock and unlock for function. **Check and inspect for hydraulic for leaks on actuator model.**		OEM Manual	( )YES ( ) NO As found condition..... N/A
	Check condition of slew ring bolts e.g. Bolt grade and washers. **Caution:** Use only hardened flat washers under head of bolt. Do not use lock washers, or regular flat washers.		Industry Standard	( )YES ( ) NO As found condition..... Good
	Check ball ring bolts torque (For American Aero ONLY) : After 3-4 hours, or initial "Run-in", and after every 500 operating hours, re-torque all of the bolts. Annually, or AFTER 2,000 Hours of Operation, re-torque the bolts. **Criteria:** If one or more bolts are found to be tightened to less than 80% of the prescribed pre-stress, that loosen bolt (s) should be replaced, in addition to the two adjacent bolts. If 20% of the total number of bolts are found to tightened to less than 80% of the prescribed pre-stress, replace all bolts.(Pre - Load)		Company Spec/Standard	( )YES ( ) NO
	Monitor ball-ring grease sample. If found wear and tear particles, take sample and send to lab. **Wear assessment by grease sample analysis—wear may be monitored by periodic grease sample analysis as describe in this section. Grease samples should be collected every twelve months as a minimum and the results of the analysis recorded; this period should be shortened if obvious metal or contaminants are present.		API PR 2D	( ) SEND TO LAB ( ) NOT SEND TO LAB As found.....
	Check ball ring bolts torque (For American Aero ONLY) : After 3-4 hours, or initial "Run-in", and after every 500 operating hours, re-torque all of the bolts.		Company Spec/Standard	( )YES ( ) NO N/A
		1236 ft-lbs	OEM Manual	( )YES ( ) NO
		1236 ft-lbs	OEM Manual	( )YES ( ) NO
	Check slew pinion back lash clearance, and record:		OEM Manual	
	RECORD MEASSUREMENTS: 0.019" Min/ 0.030" Max	0-North	OEM Manual	0.022 inch
		45-Northeast	OEM Manual	0.022 inch
		90-East	OEM Manual	0.022 inch
		135-Southeast	OEM Manual	0.022 inch
		180-South	OEM Manual	0.021 inch

[redacted] / 9 Jan 25.

SYSTEM	TASK		Specification	Record/Reading
		225-Southwest	OEM Manual	0.022 inch
		270-West	OEM Manual	0.019 inch
		315-Northwest	OEM Manual	0.020 inch
	RECORD SLEW RING INFORMATION :	Manufacturer:	OEM Manual	Rotek
		Model:	OEM Manual	–
		Serial Number:	OEM Manual	M095200-AZ
	TORQUE WRENCH RECORD:	Torque Wrench S/N:	Industry Standard	–
		Calibration Date:	Industry Standard	–
	Perform ball ring deflection readings to check for bearing wear and record reading in below chart:		API RP 2D	( ) YES ( ) NO

Explain reason for No Bearing Deflection Reading: (IF N/A)		Applicable for Nautilus ONLY				
Boom Position	Boom Rest	Water Side	180 Degrees From Boom Rest	180 Degrees from Water Side	Grease Samples Positions	
0-North	0.	0	0	0	0	
45-Northeast	0.005	0.007	0.010	0.005	45	
90-East	0.010	0.012	0.018	0.015	90	
135-Southeast	0.022	0.017	0.020	0.022	135	
180-South	0.027	0.022	0.020	0.027	180	
225-Southwest	0.022	0.025	0.031	0.018	225	
270-West	0.017	0.018	0.024	0.010	270	
315-Northwest	0.005	0.003	0.010	0.002	315	
360-North	0	0	0	0	360	

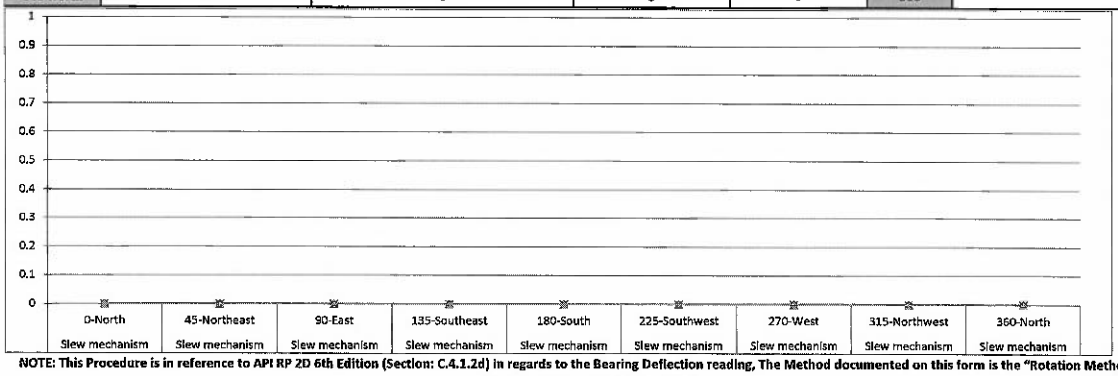

NOTE: This Procedure is in reference to API RP 2D 6th Edition (Section: C.4.1.2d) in regards to the Bearing Deflection reading, The Method documented on this form is the "Rotation Method" as described in detail in the API RP 2D

Review with previous PM inspection report for signs of irregularities or increased wear.		API RP 2D	(✓) YES ( ) NO
The permissible bearing wear for the swing bearing to be used as a guideline ** Note ; If the initial bearing clearance (bearing defection) is not know the absolute maximum permissible clearance(or wear) for the bearing is: 0.120 inch (3.05 mm)	< 0.134 inch	OEM Manual	0.031 inch
Verify crane condition and load test as separate procedure.		API 2C	(✓) YES ( ) NO Specific test load 6612 lbs.
Verify crane condition and load test as separate procedure. " Record crane load test in load test form."		Company Standard	(✓) YES ( ) NO

Table 1—Static/Onboard Test Load and Radius

Static/Onboard Rated Load at a Specific Radius lb (kg)	Test Loads in Excess of Static/Onboard Rated Load at a Specific Radius
≤ 40,000 (18,144)	25 %
> 40,000 ≤ 100,000 (>18,144 ≤ 45,356)	10,000 lb (4536 kg)
> 100,000 (45,356)	10 %

Risk Level Definitions: The following 3 levels indicate the impact the noted deficiency poses to the operation or structural integrity of the equipment:

Level 1 = Incidental	Level #2 = Restricted Operation	Level #3 = Out of Service
Minor deficiency that is recommended to be promptly addressed, but poses no safety and/or environmental risk. The crane can still be operated at full duty.	Deficiency identified that has the potential to limit, de-rate or damage the crane, its surroundings and/or the environment. The duty and locked/ tagged out until the crane's duty and operation should be de-rated or service restricted.	The crane should be removed from duty and locked/ tagged out until the deficiency is rectified.

System:	Risk Level:	Component:		In Accordance with:	
		Location:		Date Originated:	
Description:	HYD hose – 16 X 150" line Aux C/V to Swivel (ภายนอก)				
Recommended Action:					
Recommended urgency timeframe for corrective action:	Next Plan	Completed Date:		Completed By:	

System:	Risk Level:	Component:		In Accordance with:	
		Location:		Date Originated:	
Description:					
Recommended Action:					

[redacted] / 9 Jan 25

SYSTEM	TASK		Specification	Record/Reading
Recommended urgency timeframe for corrective action:		Completed Date:	Completed By:	

System:	Risk Level:	Component:		In Accordance with:	
		Location:		Date Originated:	
Description:					
Recommended Action:					
Recommended urgency timeframe for corrective action:			Completed Date:	Completed By:	

System:	Risk Level:	Component:		In Accordance with:	
		Location:		Date Originated:	
Description:					
Recommended Action:					
Recommended urgency timeframe for corrective action:			Completed Date:	Completed By:	

System:	Risk Level:	Component:		In Accordance with:	
		Location:		Date Originated:	
Description:					
Recommended Action:					
Recommended urgency timeframe for corrective action:			Completed Date:	Completed By:	

System:	Risk Level:	Component:		In Accordance with:	
		Location:		Date Originated:	
Description:					
Recommended Action:					
Recommended urgency timeframe for corrective action:			Completed Date:	Completed By:	

Done By

[redacted]

b Jan 25.

CRANE Mfg. : Nautilus
MODEL: 200B-50
SERIAL NUMBER :

LOCATION
BEWG

DATA BASE - PM JOB TASK CARD
WO:1241682

Crew Size: 4
Estimated Hours:

SYSTEM	TASK		Specification	Record/Reading
Safety	Perform Job Safety Analysis (JSA)		Company Spec/Standard	(✓) YES ( ) NO
	Obtain "COMPANY" PERMIT TO WORK		Company Spec/Standard	(✓) YES ( ) NO
	Perform Tool Box Talk		Company Spec/Standard	(✓) YES ( ) NO
	BEFORE/AFTER JOB EXECUTION: Ensure to comply with isolation procedure (LOCK OUT/TAG OUT, WARNING SIGNS and BARRIERS).		Company Spec/Standard	(✓) YES ( ) NO
Required Tools	Insure proper tools are available at the job site		Company Spec/Standard	(✓) YES ( ) NO
	Tool bag		Company Spec/Standard	(✓) YES ( ) NO
	Tool box		Company Spec/Standard	(✓) YES ( ) NO
	Tool Container		Company Spec/Standard	(✓) YES ( ) NO
	MPI equipment and operator		Company Spec/Standard	(✓) YES ( ) NO
	Check safety harness Software and Hardware should be good condition before use		Company Spec/Standard	(✓) YES ( ) NO
	Check Rescue Equipment ready to use onsite		Company Spec/Standard	(✓) YES ( ) NO
	Portable Scaffolding and Crew if require		Company Spec/Standard	(✓) YES ( ) NO
Lubricants	Insure proper lubricants and consumables are available at the job site.		Company Spec/Standard	(✓) YES ( ) NO
	Hydraulic System - Hydraulic Oil	Rando HD-68	OEM Manual	(✓) YES ( ) NO
	Slew Gearbox - Gear Oil	Meropa 220	OEM Manual	(✓) YES ( ) NO
	Auxiliary Hoist - Gear Oil	Meropa 220	OEM Manual	(✓) YES ( ) NO
	Main Hoist - Gear Oil	Meropa 220	OEM Manual	(✓) YES ( ) NO
	Grease Points - Lithium Based **IT MUST NOT INCLUDE MOLYBDENUM DISULPHIDE**	MULTIFAK EP#2	OEM Manual	(✓) YES ( ) NO
	Open Gear Teeth - Open Gear Lube highly water resistant and of an adhesive nature.	OMEGA 73	OEM Manual	(✓) YES ( ) NO
	Pneumatic Lubricator	SAE Grade 10	OEM Manual	(✓) YES ( ) NO
	Wire rope Lubricant Company preferred grade	Birlube 70	OEM Manual	(✓) YES ( ) NO
	Engine Oil - SAE Grade 15W-40 (Delo Gold)	15W-40	OEM Manual	(✓) YES ( ) NO
	Safe Load Indicator fluid	W-15	OEM Manual	(✓) YES ( ) NO
	Engine Radiator - Should have radiator preservatives additives	Cat® SCA	OEM Manual	(✓) YES ( ) NO
Consumables	Spray Cold Galvanize		Company Spec/Standard	(✓) YES ( ) NO
	Denso Tape		Company Spec/Standard	(✓) YES ( ) NO
	WD-40		Company Spec/Standard	(✓) YES ( ) NO
History Review	Before starting work, tasks preparation at least 1 day prior to starting work: 1. Review history PM/ CM from Roving Team, 2. Review last PM/ CM/ PMI from Crane Mech, 3. List out all punch list and prepare parts. 4. Review last Certificate task performed		API RP 2D	(✓) YES ( ) NO
	Require to update part history from Crane Mech on following main compenents to ensure the right parts are prepared: - Aux/ Main/ Boom Cylinder, Engine, Swing Gearbox, etc. Reference: Crane OEM information of each part need to be recorded - Manufacturer & Contact info - Model & serial number - Installation date		Company Spec/Standard	(✓) YES ( ) NO
	Review history data from Certificates and incorporate into current PM: - Pull Test Certificates (ongoing update, 4 yr. history). - Load Test Certificates (ongoing update, 4 yr. history). - Wire Rope Certifications (running rope and standing rope) (life of rope). - Hoist Certifications for hoist classified as "personnel handling" hoist.		API RP 2D	(✓) YES ( ) NO
	Review Last Preventative Maintenance Records (Inspection Reports) - Pre-use (Pre-Post Inspection) - 6 Monthly (API RP 2D Not Defined, Company Standard) - 1 Yearly (API RP 2D Defined Annual Inspection)		API RP 2D	(✓) YES ( ) NO
Lifting Gear Preparation	Visually Inspect (Sling, sling hooks and shackles) include Webbing / Chain		Company Spec/Standard	(✓) YES ( ) NO
	Check color code / Tag & date inspection		Company Spec/Standard	(✓) YES ( ) NO
General	Determine if access route to-from crane is clean, safe, unobstructed and adequately protected against falls, tripping and slipping		Company Spec/Standard	(✓) YES ( ) NO
	Check drain lines and drip pans for deterioration		API RP 2D	(✓) YES ( ) NO
	Remove any sediment collected in the bottom of drip pans		Industry Standard	(✓) YES ( ) NO
	Check for general crane and components for loss of protective coating and corrosion		Industry Standard	(✓) YES ( ) NO
	Check for missing or loose ,corrosion, deformation pins, pin keepers, bolts, nuts, fasteners of all laders, cages and working platform		API RP 2D	(✓) YES ( ) NO
	Apply grease to exposed grease parts (control valve spools, ball-ring gear, parking brake valve, etc.)		OEM Manual	(✓) YES ( ) NO
Prime Mover	Engine Caterpillar		OEM Manual	(✓) YES ( ) NO
	CATERPILLAR MODEL 3304 DI	S/N.:	OEM Manual	10E05702
		AR.No.:	OEM Manual	10E 3871
	Change engine lube oil & oil filter and check the condition of old oil As found ; Not contaminatted		OEM Manual	(✓) YES ( ) NO
	Check diesel tank level, top up if required.		OEM Manual	(✓) YES ( ) NO
	Check / Clean crankcase breather cap. Change if required		OEM Manual	(✓) YES ( ) NO
	Check / Clean air cleaner filter, Replace if require. (Note : Include inspect air cleaner housing)		OEM Manual	(✓) YES ( ) NO
	Check condition and inspect of the radiator and cap.		OEM Manual	(✓) YES ( ) NO
	Check for any signs of leaks on or around the engine ie; Crankshaft seal for front & rear seal , Engine oil cooler. As found; Good		OEM Manual	(✓) YES ( ) NO
	Check condition of exhaust system for leaks, corrosion, insulation and general. As found ; Good		OEM Manual	(✓) YES ( ) NO
	Check condition of all engie hoses and tube. (Fuel supply,Cooling system and Lube oil system. As found; Good		OEM Manual	(✓) YES ( ) NO
	Drain water and sediment form diesel tank As found ; Not contaminatted		OEM Manual	(✓) YES ( ) NO
	Check / Clean Diesel tank level sightglass and diesel tag.		OEM Manual	(✓) YES ( ) NO
	Apply grease of fan bearing/shaft.		OEM Manual	(✓) YES ( ) NO
	Check and inspect the vibration damper and pulley. As found ;		OEM Manual	(✓) YES ( ) NO
	Change water coolant and check condition base of water coolant and record PH.		OEM Manual	(✓) YES ( ) NO
	COOLANT PARAMETERS (PH):	6 or higher	OEM Manual	PH = 8
	HOUR METER PARAMETERS:	LAST READING 5475 HRS	OEM Manual	5480 HRS
	Check and retigthen the bolts of all engine base. / Inspection mouting rubber. As found ; Good		OEM Manual	(✓) YES ( ) NO

[redacted] / 24 Jan 25

SYSTEM	TASK	Specification	Record/Reading
	Inspect the engine fan blades that there is a break is it severely distorted or rusted. As found ;.....	OEM Manual	(✓) YES ( ) NO
	Change and adjust the tension engine belts. Remark; To check belt Tension, after has engine run more than 30 minutes apply 400 N (90 lbs) of force midway between the pulleys. Correctly adjusted belts with deflect 13 to 19 mm (1/2 to 3/4 inch).	OEM Manual	(✓) YES ( ) NO
	Check engine HYD starter drive gear bendix and fly wheel gear teeth condition and record. **Replace if required"	OEM Manual	(✓) YES ( ) NO Bendix Gear : 80 % Fly wheel Gear teeth : 70 %
	Check and inspect condition the Bendix of hydraulic Starter motor.	OEM Manual	(✓) YES ( ) NO
	Lubricate and check engine throttle system.	OEM Manual	(✓) YES ( ) NO
	Determine if the tachometer operates properly: Record Value of Idle & Max Speed (RPMs) Note: Too low Idle (RPMS) will cause excessive worn at winch brake	OEM Manual	
	ENGINE RPM SPECIFIC IDLE SPEED 850-950 RPM	OEM Manual	850 RPM
	MAX SPEED 2200 RPM	OEM Manual	2200 RPM
	Confirm engine oil pressure as per Parameters below and Record Value:	OEM Manual	
	ENGINE OIL PRESSURE SPECIFIC Minimum Not lower then 30 PSI	OEM Manual	35 PSI
	Maximum 70 PSI	OEM Manual	70 PSI
	Confirm engine fuel pressure Parameters are correct and Record Value:	OEM Manual	
	ENGINE FUEL PRESSURE SPECIFIC** Normal Green Range / 15 psi **Note;Fuel pressure at high idle is lower than 105 kPa (15 psi)RAMETERS	OEM Manual	(✓) YES ( ) NO
	Confirm engine temperature Parameters and Record Value:	OEM Manual	
	ENGINE WATER TEMP SPECIFIC NORMAL 120 - 180 degrees F	OEM Manual	170 F
	Test engine SAFETY DEVICE- ensure engine kill cable shuts off FUEL supply	API RP 2D	(✓) Function ( ) False
	Test engine SAFETY DEVICE- ensure EMERGENCY KILL CABLE - shuts off AIR supply	API RP 2D	(✓) Function ( ) False
	Test engine SAFETY DEVICE- ensure ENGINE low lube oil - releases OIL PRESSURE to ctivate Alarm Air System ***Note*** Engine oil pressure low alarm at 20 PSI	Company Spec/Standard	( ) Function ( ) False N/A
	Test engine SAFETY DEVICE- ensure HIGH TEMP - releases OIL PRESSURE to activate Alarm Air System	Company Spec/Standard	( ) Function ( ) False N/A
	Change water separator filter.	OEM Manual	(✓) YES ( ) NO
	Check the general conditionand functioning of turbocharger. Note;	OEM Manual	(✓) Leak ( ) Not Leak
	Change fuel filter and inspect the primary hand pump.	OEM Manual	(✓) YES ( ) NO
	Check water temperator regulator.(Thermostat). Change if require refer from cooling temperature.	OEM Manual	(✓) YES ( ) NO
	Check general condition the Governor and control linkage. (Inspect the throtle linkage)	OEM Manual	(✓) YES ( ) NO
	Check or adjust the engine valve lash. (Intake vale = 0.015", Exhaust valve = 0.025")	OEM Manual	(✓) YES ( ) NO
	Check condition wear of pump drive spline and record **Note; Remaining 70% of Original Spline Surface must be replace.	Company Spec/Standard	90 % Remaining
	Check condition wear of adaptor Coulping spline shaft and record **Note; Remaining 70% of Original adaptor Coulping spline shaft Surface must be replace.	Company Spec/Standard	65 % Remaining
	Check condition wear of Coulping spline and record. Re-tigthen of all lock bolts. **Note; Remaining 70% of Original adaptor Coulping spline shaft Surface must be replace.	Company Spec/Standard	95 % Remaining
Hydraulic Start System (Apply for C2-Remote P/F Only)	Check pressure system at the pressure gauge which should reach 3,000 PSI as standard when the system is FULLY charged. Record Value. (As the system cools down, the pressure should drop slightly and finally stabilised.)	OEM Manual	(✓) YES ( ) NO
	Visually inspect all hydraulic connections and hoses for leaks and retighten if necessary. (Caution: This should NOT be done if the system is under pressure.) 1. Slowly release system pressure by loosening the bleed screw on top of the hand pump. 2. Ensure no pressure remains, retighten the suspected leak fitting or replace the damaged hose or component. 3. Retighten the bleed screw on the hand pump. 4. Pump the system up to 2200 - 2600 PSI 5. Inspect that the leak was eliminated.	OEM Manual	(✓) YES ( ) NO
	Function check Accumulator Pre-charge. (Caution: This should NOT be done if the system is under pressure.) 1. Shut the engine off, release system pressure via the bleed screw on top of the hand pump 2. Retighten bleed screw and actuate the hand pump. The pressure will rapidly increase and then stabilised. This pressure is related to accumulator gas pre-charge pressure. 4. if the pressure rapidly increase to 3000 PSI, it indicates that the accumulator has lost its gas charge. 5. Troubleshoot as necessary	OEM Manual	(✓) YES ( ) NO
	Check function rechaging system by function boom down while the engine running. 1. The crane engine is running at 1,000-1500 RPM. 2. Slowly control lever boom function down for charging pressure to accumulator. 3. This pressure should read on prssure gauge between 2200 - 2600 PSI depending on the recharge ratio 80% std. (90% optional). Record Pressure Value.	OEM Manual	2500 PSI
	Check Nitrogen pressure in Accumulator ***Note**spec @ 1,500 psi as follow schematic and if found pressure loss below 1400 PSI then prepare recharge nitrogen in system	OEM Manual	1500 PSI
	Every 36 months or 2000 engine running hours (approximately 1500 starts) replace the high pressure filter.	OEM Manual	(✓) YES ( ) NO
Pneumatic System	Check for noisy compressor operation, which could indicate a worn drive gear coupling, a loose pulley or excessive internal wear	OEM Manual	(✓) YES ( ) NO
	Check Air Compressor external oil supply and return lines, if applicable, for kinks, bends, or restrictionsto flow	OEM Manual	( ) YES ( ) NO
	Inspect the Air compressor discharge port, inlet cavity and discharge line for evidence of restrictions and carboning. (If excessive buildup is noted)	OEM Manual	( ) YES ( ) NO
	Check all hose connections are sound and all mounting and pivoting connections are secure.	OEM Manual	( ) YES ( ) NO
	Check condition / Clean and lubricate unloading valve	OEM Manual	( ) YES ( ) NO
	Check proper air pressure is available for the system. Record Value.	OEM Manual	
	AIR SYSTEM PARAMETERS: MAX 50 PSI	OEM Manual	PSI
	Visually inspection condition of air receiver for signs of corrosion or loose of structural integrity.	Industry Standard	( ) YES ( ) NO
	Check the hose, piping and tubing for mechanical damage, corrosion, splits, blisters, cracking or excessive abrasion on the outer surface	Industry Standard	( ) YES ( ) NO
	Drain off air filter and reciever to remove condensed water. If water is present, drain until water is removed.	Industry Standard	( ) YES ( ) NO
	Check proper operation of pop off valve, by manually functioning valve.	Industry Standard	( ) YES ( ) NO
	Check proper operation of manual latch valve, by manually functioning latch.	Industry Standard	( ) YES ( ) NO
	Check proper operation of small engine alarm horn.	Industry Standard	( ) YES ( ) NO
Hoist / Brakes	Visually check a hoist exhibits erratic operation and/or unusual noise, the hoist must be taken out of service until it is inspected and serviced by a qualified technician. Continued operation of a hoist with a defect in a critical component may lead to loss of load control, property damage, serious injury or death.	OEM Manual	(✓) YES ( ) NO
	Visual exteriors of hoist, frames, drums and flanges for damage, leaks, cracks and wear and repair/replace as required to maintain the structural integrity of the hoist.	OEM Manual	(✓) YES ( ) NO

[redacted] / 24 Jan 25

SYSTEM	TASK			Specification	Record/Reading
	Check all hoist mounting pins, bolts or other fasteners and replace or tighten as necessary.			OEM Manual	(✓) YES ( ) NO
	Lubricant level must be maintained between the minimum and maximum levels; midway up sight glass or at bottom of level plug port as equipped and check/clean plug vent. Use only the recommended type of lubricant.			OEM Manual	(✓) YES ( ) NO
	Inspect Brake Valve Opening Pressure test V/V 1-1/4" PD Series : no lower than 550 PSI V/V 1-1/2" CH Series : no lower than 575 PSI	Main		Braden Bulletin 527-Dec,1996	600 PSI
		Aux			600 PSI
	Inspect Brake cylinder opening pressure test. CH/PD Series : 400-450 PSI.	Main		Industry Standard	400 PSI
		Aux			400 PSI
	Measure differancian of static and dynamic brake. CH/PD Series : 150-250 PSI.	Main		Industry Standard	200 PSI
		Aux			200 PSI
	Check for external oil leaks and repair as necessary. This is extremely important due to the accelerated wear that will result from insufficient lubricating oil in the hoist.			OEM Manual	(✓) YES ( ) NO
	RECORD BOOM CYLINDER INFORMATION :	Boom cylinder Diameter:		OEM Manual	DIA: 11 Inch
		CY Number:		OEM Manual	L= 0352 R= 0352
		Serial Number:		OEM Manual	L= 2997 R= 55 46
	RECORD MAIN HOIST INFORMATION :	Manufacturer:		OEM Manual	Braden
		Model:		OEM Manual	CH 185 A-3611E-G2-1
		Serial Number:		OEM Manual	0100293
	Check MAIN HOIST for proper operation and good condition			API RP 2D	(✓) YES ( ) NO
	Brake test & record pressure of MAIN HOIST.			OEM Manual	(✓) YES ( ) NO As found 800D
	Change main hoist gear oil and inspect for small particles in the old oil. ** Refer to Onsite Gear Oil Sample Procedure ** ** Replace and send oil sample to SKL if abnormal ** ** Take photo of Oil Sampling for Reference**			OEM Manual	(✓) YES ( ) NO As found 800D
	RECORD AUXILIARY HOIST INFORMATION :	Manufacturer:		OEM Manual	Braden
		Model:		OEM Manual	PD 185-SPL-2905-02-1
		Serial Number:		OEM Manual	1032099
	Check AUXILIARY HOIST for proper operation and good condition			API RP 2D	(✓) YES ( ) NO
	Brake test & record pressure of AUXILIARY HOIST			API RP 2D	(✓) YES ( ) NO
	Change Aux. hoist gear oil and inspect for small particles in the old oil. ** Refer to Onsite Gear Oil Sample Procedure ** ** Replace and send oil sample to SKL if abnormal ** ** Take photo of Oil Sampling for Reference** Please record if any abnormal condition. Note.....			OEM Manual	( ) SEND SKL LAB (✓) NOT SEND SKL LAB
	Check pressre relief Valve: Determine hoistes' relief valve pressure gauge is working and giving accurate measurement by notice whether pressure gauge is vibrating or not. If not, set relief valve pressure in accordance with the schematic and parameters below. Record all readings.			OEM Manual	(✓) YES ( ) NO
	BOOM RELIEF VALVE TEST	Relief Specific:	3,000 PSI	OEM Manual	3040 PSI
	MAIN HOIST RELIEF VALVE TEST	Relief Specific:	2,950 PSI	OEM Manual	2950 PSI
	AUX HOIST RELIEF VALVE TEST	Relief Specific:	2,950 PSI	OEM Manual	2950 PSI
	SWING RELIEF VALVE TEST	Relief Specific:	1,200 PSI	OEM Manual	1200 PSI
	Measure Pressure of hoist motor case drains and Record Value Reference Bulletin: BRADEN Inspection, Testing, Preventive Maintenance and Special Operating Instructions For Planetary Hoists PB-308 latest edition for further details.			OEM Manual	
	MAIN HOIST CASE DRAIN for Gear Motor (Down Mode).	PRESSURE	< 100 psi	Company Spec/Standard	24 PSI
	AUX. HOIST CASE DRAIN for Gear Motor (Down Mode).	PRESSURE	< 100 psi	Company Spec/Standard	22 PSI
Hydraulic System	Check hydraulic tank oil level. Oil should be visible in the sight glass. Top up as required (3/4 Tank Minimum)			OEM Manual	(✓) YES ( ) NO
	Check hydraulic oil condition. (Check if running hours are more than 100 hours from last oil change or during Annual inspection) ** Refer to Onsite Hydraulic Oil Sample Procedure ** ** Replace and send oil sample to SKL if abnormal ** ** Take photo of Oil Sampling for Reference**		Rando HD-68	Company Spec/Standard	( ) SEND SKL LAB (✓) NOT SEND SKL LAB
	Inspect hydraulic tank and strainer filter. Change hydraulic oil, if required with lab confirmation.			Company Spec/Standard	(✓) YES ( ) NO
	Drain off 1 liter of oil to remove condensed water. If water is present, drain until water is removed and top up with clean oil			Industry Standard	(✓) YES ( ) NO
	Check for any hydraulic leaks			Industry Standard	(✓) YES ( ) NO
	Check the hydraulic hose, piping and tubing for mechanical damage, corrosion, splits, blisters, cracking or excessive abrasion on the outer surface			API RP 2D	(✓) YES ( ) NO
	Check that all hydraulic hose connections are sound and that all mounting and pivoting connections are secure.			Industry Standard	(✓) YES ( ) NO
	Lubricate hydraulic swivel in pedestal and insure tie down restrains are in place and preventing the swivel from rotating with the crane structure.			OEM Manual	(✓) YES ( ) NO
	Ensure the filler breather on tank is not covered or clogged			Industry Standard	(✓) YES ( ) NO
	Visually inspect for missing or loose pins, pin keepers, bolts, nuts, fasteners on all pumps, motors and valves.			API RP 2D	(✓) YES ( ) NO
	* Re-tighten the stud bolt of hydraulic main pump and marking the nut for checking to prevent loosening. Note : Torqe spec model P75, P75, PGP/PGM350 ,PGP/PGM330 = 200 ft-lbs. , for model PGP/PGM315 = 140 ft-lbs. and PGP/PGM365 = 450 ft-lbs.			The Commercial Intertech manual	(✓) YES ( ) NO
	Check the filter bypass indicator, while engine is running			OEM Manual	(✓) YES ( ) NO
	With engine running (after all other items pass inspection), check the system for leaks around fittings, hoses, valves and reservoirs			Industry Standard	(✓) YES ( ) NO
	With engine running, check the source of any unusual noise or vibration that may cause or indicate equipment damage or wear			Industry Standard	(✓) YES ( ) NO
	Ensure all hoses are properly rated for the system, see "Parameters" for each system for details.			Industry Standard	(✓) YES ( ) NO
	Record hydraulic oil operating temperture. Note: Hydraulic fluid overheating temperature is over 180 F degrees or 82 C, degrees (reservoir temperature)			Industry Standard	150 Degree F
	Determine if hydraulic return pressure gauge is working and giving accurate measurements. Record readings				
	RECORD HYDRAULIC RETURN PRESSURE PARAMETERS:		60 PSI "maximum"	OEM Manual	40 PSI
	Check and inspect the hydraulic return filters and seals.			OEM Manual	( ) YES ( ) NO
	Function Testing and record pressures with engine at :		2,200 RPM	API RP 2D	
	BOOM FUNCTION TEST (Need Crane Mech to verify each platform)			OEM Manual	
		Cracking pressure	RECORD	OEM Manual	600 PSI

[redacted] / 24 Jan 24

SYSTEM	TASK				Specification	Record/Reading
	Boom Angle : 60 Degree (Recommend or as applicable)	UP	Full Speed Pressure	RECORD	OEM Manual	700 PSI
		DOWN	Cracking pressure	RECORD	OEM Manual	1500 PSI
			Full Speed Pressure	RECORD	OEM Manual	2200 PSI
	MAIN HOIST FUNCTION TEST (Need Crane Mech to verify each platform)				OEM Manual	
	Boom Angle : 60 Degree (Recommend or as applicable)	UP	Cracking pressure	RECORD	OEM Manual	100 PSI
			Full Speed Pressure	RECORD	OEM Manual	700 PSI
		DOWN	Cracking pressure	RECORD	OEM Manual	1500 PSI
			Full Speed Pressure	RECORD	OEM Manual	2200 PSI
	AUX HOIST FUNCTION TEST (Need Crane Mech to verify each platform)				OEM Manual	
	Boom Angle : 60 Degree (Recommend or as applicable)	UP	Cracking pressure	RECORD	OEM Manual	500 PSI
			Full Speed Pressure	RECORD	OEM Manual	700 PSI
		DOWN	Cracking pressure	RECORD	OEM Manual	700 PSI
			Full Speed Pressure	RECORD	OEM Manual	1500 PSI
	SWING FUNCTION TEST (Need Crane Mech to verify each platform)				OEM Manual	
	Boom Angle : 60 Degree (Recommend or as applicable)	LEFT	Cracking pressure	RECORD	OEM Manual	100 PSI
			Full Speed Pressure	RECORD	OEM Manual	700 PSI
		RIGHT	Cracking pressure	RECORD	OEM Manual	100 PSI
			Full Speed Pressure	RECORD	OEM Manual	700 PSI
Electrical system, Crane Boom Lighting and red obstruction light	Check the electrical junction boxes, wires and connections for deterioration, desiccant bags, (replace as required)				Industry Standard	(✓) YES ( ) NO
	Check the condition of the grounding and lighting protection system.				Company Spec/Standard	(✓) YES ( ) NO
	Visually inspect boom floodlight and light guards for loose, missing, corroded				Company Spec/Standard	(✓) YES ( ) NO
	Check condition pipe support , U-bolt ,nuts of boom floodlight and Electric slipring for loose , missing , corroded				Company Spec/Standard	(✓) YES ( ) NO
	Check Electric slipring/swivel for 360° continuous rotation				OEM Munnal	(✓) YES ( ) NO
	Check Water ingress, condensation in electric slipring, red obstruction light and boom floodlight				OEM Munnal	(✓) YES ( ) NO
	Check feely movement and lubricate of boom floodlight				OEM Munnal	(✓) YES ( ) NO
	With generator in operation, intergize all lights to unsure proper function.				API RP 2D	(✓) YES ( ) NO
	Check condition of crane boom lighting and safety net is secured with strong point. * **Safety net should be replace 24 months after installation (2 year)***			Last installation date _____	Company Spec/Standard	(✓) YES ( ) NO
	Check function of crane sound signal				Company Spec/Standard	(✓) YES ( ) NO ( ) N/A
	Check function of crane boom lighting at boom upper section				Company Spec/Standard	(✓) YES ( ) NO ( ) N/A
	Check function of crane boom lighting at boom lower section				Company Spec/Standard	(✓) YES ( ) NO ( ) N/A
	Check function of crane boom lighting at winch skid				Company Spec/Standard	(✓) YES ( ) NO ( ) N/A
	Check function of crane boom lighting at crane cabin				Company Spec/Standard	(✓) YES ( ) NO ( ) N/A
	Check function becon light at boom tip				Company Spec/Standard	(✓) YES ( ) NO ( ) N/A
	Inspection wire rope guide & Roller assembly				Company Spec/Standard	(✓) YES ( ) NO
	Visually inspect red obstruction light pipe support, u-bolts, nuts connection to hand rail for loose, missing, corroded				Company Spec/Standard	(✓) YES ( ) NO
	Visually inspect safety sling attached to the red obsruction light and its base for loose, missing, corroded				Company Spec/Standard	(✓) YES ( ) NO
	Visually inspect red obstruction light function. The light is designed to turn on all the time.				Company Spec/Standard	(✓) YES ( ) NO
Operator Control Station	Check general condition of control panel, bolts, paint security, etc.				API RP 2D	(✓) YES ( ) NO
	Determine if there is a serviceable fire extinguisher in the vicinity of the crane				Company Spec/Standard	(✓) YES ( ) NO
	Determine if correct load chart is in use and easily visible for operator				API RP 2D	(✓) YES ( ) NO
	Determine if charts, indicators and hand signal chart are in the cabling and firmly attached				API RP 2D	(✓) YES ( ) NO
	Determine if angle/radius indicator plate is easily visible to operator and is moving freely.				API RP 2D	(✓) YES ( ) NO
	Check condition of control levers and determine if they "dead-man" back to the neutral position.				API RP 2D	(✓) YES ( ) NO
	Check condition of pressure gauges.				API RP 2D	(✓) YES ( ) NO
	Check proper control labels are firmly installed, completely legible and properly labeled				API RP 2D	(✓) YES ( ) NO
	Check controls for freedom-of-movement				API RP 2D	(✓) YES ( ) NO
	Check condition , Leak, freely moement of Dynamic swing break system *** Note; If HYD Oil loose in CYD reservoir must be refill*				OEM Manual	(✓) YES ( ) NO
	Check condition , Leak, freely moement of Accelerate System *** Note; If HYD Oil loose in CYD reservoir must be refill*				OEM Manual	(✓) YES ( ) NO
	Check all safety glass and rubber seal for proper condition				API RP 2D	(✓) YES ( ) NO ( ) N/A
	Function Test Horn. Note;.....				Industry Standard	(✓) YES ( ) NO ( ) N/A
	Ensure PRE/POST Check List and Pocket Manual in the cabin. Note;.....				Company Standard	(✓) YES ( ) NO ( ) N/A
Load Indicator System	Visual check on fittings and connections for leaks. Fix leak if any. Note: Good.....				OEM Manual	(✓) YES ( ) NO
	Should any leaks exist, stop leak and recharge system, refer to maintenance manual				OEM Manual	(✓) YES ( ) NO
	Change and flushing Load cell fluid.				OEM Manual	(✓) YES ( ) NO
	Check general condition of tubbing, hoses, pins bolts, paint, etc.				Industry Standard	(✓) YES ( ) NO
	Insure load cell is free of obstructions				OEM Manual	(✓) YES ( ) NO
	Check condition of gauge(s) face and clean glass as required.				OEM Manual	(✓) YES ( ) NO
	Check the scale's operation and weighing accuracy. (Main Hoist) Remark : Maximum variance +/- 2% Note; Good.....				Company Spec/Standard	(✓) YES ( ) NO ( ) N/A
	Check the scale's operation and weighing accuracy. (Aux. Hoist) Remark : Maximum variance +/- 2% Note; Good.....				Company Spec/Standard	(✓) YES ( ) NO ( ) N/A
	Check the internal casting fluid of weight indicator. top up if required				Industry Standard	(✓) YES ( ) NO ( ) N/A
	Insure SWL tag matches ratings on the Crane Load Chart.				OEM Manual	(✓) YES ( ) NO ( ) N/A
	Insure Boom Length, matches the Crane Load Chart				OEM Manual	(✓) YES ( ) NO ( ) N/A
	Insure Boom Angle measurements and readings match the boom angle indicator.				OEM Manual	(✓) YES ( ) NO ( ) N/A
	Insure Boom Radius measurements indicate the distance from center line of the crane to the hook				OEM Manual	(✓) YES ( ) NO ( ) N/A
	Check Main load cell gap 1/4 (0.250) inch				OEM Manual	(✓) YES ( ) NO ( ) N/A
	Check Aux load cell gap 3/8(0.380) inch (Compression Load Cell Type)				OEM Manual	(✓) YES ( ) NO ( ) N/A

[redacted] / 24 Jan 25

SYSTEM	TASK	Specification	Record/Reading
Pedestal & Structure	Visually check Pedestal for chipped/cracked paint, deformation, worn parts, dents, corroded areas, cracks weld, etc.	API RP 2D	(✓) YES ( ) NO
	Check water rain drain at pedestal must be not obstuct	Industry Standard	(✓) YES ( ) NO
	Check pin and cotter pin of pedestal missing , corrosion, wear, damage and exercise pin.	Industry Standard	(✓) YES ( ) NO
	Visually check Base - Plate connection and Base hoist Structure for chipped/cracked paint, deformation, worn parts, dents, corroded areas, cracks weld, etc.	API RP 2D	(✓) YES ( ) NO
	Check A fixed such as Handrial, Walkway, Grating, stationary structure without significant movement in response to waves and currents in normal operating conditions.	API RP 2C	(✓) YES ( ) NO
	Visually check and lubricate maintenance Jib. ***Note*** If on pedestal crane	OEM Manual	(✓) YES ( ) NO ( ) N/A
	Check maintenance jib is secure firmly. ***Note*** If on pedestal crane	OEM Manual	(✓) YES ( ) NO ( ) N/A
Box Boom & Luffing CYD	Check and Verify entire box boom and Boom CYD for loss of protective coating and corrosion. Note;.....	API RP 2D	(✓) YES ( ) NO
	Check and Verify entire box boom and Boom CYD for chipped/cracked paint, deformation, worn parts, dents, corroded areas, cracks, etc. Note;.....	API RP 2D	(✓) YES ( ) NO
	Check and Verify boom end connections, for bends, dents, corroded areas, cracked welds, and signs of mechanical damage, wear, etc. **any deviation should be reported**	API RP 2D	(✓) YES ( ) NO
	Check and Verify boom rest and wooden support to ensure it's in good condition	API RP 2D	(✓) YES ( ) NO
	Inspect pin and pin holes of Upper tank and tower tank for excessive clearance	OEM Manual	(✓) YES ( ) NO
	BOOM CYLINDER PIN MAXIMUM TOLERANCE — 0.125 Inch (3mm)	Industry Standard	As found....good.....
	Check BOOM CYLINDERS for proper operation and good condition	API RP 2D	(✓) YES ( ) NO
	Check Boom cylinder barrels and rods for leaks, mechanical damage and corrosion	Industry Standard	(✓) YES ( ) NO
	Check and measurement boom foot pin and connection pins for clearance	Industry Standard	
	BOOM FOOT PINS & BOOM BOX CONNECTER PIN TOLERANCE — 0.125 Inch (3mm)	Industry Standard	
	Boom Foot Pin Tolerance	Industry Standard	0.020 inch
	Boom Box Connecter Pin Tolerance	Industry Standard	0.018 inch
	Check connecting bolts of box boom loose, corrosion, wear, damage	OEM Manual	(✓) YES ( ) NO
	Lubricate boom foot pins and bushings	OEM Manual	(✓) YES ( ) NO
	Lubricate boom cylinder pins, bearings and bushings	OEM Manual	(✓) YES ( ) NO
	Boom function test angle/radius to correction **Note; The cylinder(s) mechanism shall be capable of elevating the boom from a minimum of zero degrees to the maximum recommended boom angle.	API RP 2C	(✓) YES ( ) NO
	Operation functional test and verify Boom Creeping down **Note ; Test at angle 60°	Industry Standard	(✓) YES ( ) NO As found....good....
Wire Rope	Determine if parts-of-line match parts of line on the load chart in the crane cabin.	API RP 2D	(✓) YES ( ) NO
	Determine if visible portion of wire rope adequately lubricated. If not lubricate wire rope	API RP 2D	(✓) YES ( ) NO
	For each layer of wire rope on drum, check that all rope is parallel and each crossover point at hoist flanges is correct	API RP 2D	(✓) YES ( ) NO
	The top layer of rope must not be lower to the flange tips 2.5 in for Smooth drum,2 in for groove drum or 2.5 times of wire rope diameter	API RP 2C	(✓) YES ( ) NO
	Inspect wire rope for, kinking, crushing, broken wires, necking down of rope diameter, worn outside wires, corroded or broken wires at end connection, cutting or unstringing.	API RP 2D	(✓) YES ( ) NO As found....good....
	NoteRunning Ropes of rotation-resistant construction used in the main or auxiliary Hoist: - Four (4) Randomly distributed broken wires within 30 rope diameter - Two (2) broken wires in one stand within 6 rope diameter	API RP2D Edition 7	(✓) YES ( ) NO As found....good....
	One valley break can indicate internal rope damage requiring close inspection of this section of the rope. When one or more valley breaks are found in one lay length the rope should be retired.	API RP2D Edition 7	(✓) YES ( ) NO As found....good....
	Reductions for the rope diameter, from initial wire rope dimensional measurements, in a nonworking area (an area away from the sheaves) compared to the lowest diameter of rope measured in three working areas (areas where the rope regularly goes over a sheave) of more than the following is observed: — 3/64 in. (0.047 in.) (1.2 mm) for diameters up to and including 3/4 in. (19.1 mm); — 1/16 in. (0.062 in.) (1.6 mm) for diameters of 7/8 in. to 1-1/8 in. (22.2 mm to 28.6 mm); — 3/32 in. (0.093 in.) (0.8 mm) for diameter of 1-1/4 in. to 1-1/2 in. (31.8 mm to 38.1 mm); — For rope diameters greater than 1-1/2 in., a 5 % diameter loss from baseline measurement. —Wear of one-third the original diameter of the outside individual wires.	API RP2D Edition 7	(✓) YES ( ) NO As found dimension....good....
	Increase in the length of an individual rope lay is observed. This increase in lay length and accompanying reduction in diameter can be caused by failure of the core. This can occur more readily in ropes or rotation-resistant construction.	API RP2D Edition 7	(✓) YES ( ) NO As found....good....
	-Inspection and Verify running and standing rope from heat effect **Note; Not more than 250°C -There is evidence of heat damage from any source (i.e. engine exhaust, flare towers, stress corrosion cracking, etc.). Heat can be generated by passing a rope over a frozen or non-turning sheave, contact with structural members of the crane, improperly grounded welding leads or lightning strikes	Industry Standard	(✓) YES ( ) NO As found....good....
	With the boom at the highest possible angle and the main load block or overhaul ball at the water level, ensure there is a minimum of 5 wraps of wire-rope remaining on the drums. Note: (Thai law, requires minimum of 2 wraps)	API SPEC 2C / Thai Law	(✓) YES ( ) NO
	Reference: - Running rope safety factor not less than 6 for wire rope that are running wire, (Thai law; Wire rope nominal breaking strength x number parts of line / Design factor 6) - Standing rope safety factor not less than 3.5 for wire rope that are stay cables, (Thai law)	Thai Law	(✓) YES ( ) NO ( ) N/A
	Measure and record nominal diameter of "running ropes"main and auxiliary (particularly on drum, equalizer sheave and at sockets, clips and dead end points) *****Nominal = several measurements added together divided by Number of measurements*****	API RP 2D	(✓) YES ( ) NO
	Inspect wire rope and record dimension.	API RP 2D	
	MAIN WIRE ROPE OD: — FULL DRUM	OEM Manual	0.747 inch
	MAIN WIRE ROPE OD: — HALF DRUM	OEM Manual	0.746 inch
	MAIN WIRE ROPE OD: — WATER LEVEL	OEM Manual	0.745 inch
	AUX WIRE ROPE OD: — FULL DRUM	OEM Manual	0.556 inch
	AUX WIRE ROPE OD: — HALF DRUM	OEM Manual	0.571 inch
	AUX WIRE ROPE OD: — WATER LEVEL	OEM Manual	0.564 inch
	Slip-Cut 1 meter of all ropes at the wedge socket and re-wedge to prevent rust inside of wedge socket (at outward end of rope, not on hoist drum) Dead end tail length is never less than 6 inches, or: - Standard 6 to 8 Strand wire rope is not less than 7 times the rope diameter - Rotation Resistant Wire Rope is not less than 20 times the rope diameter	Company Spec/Standard	(✓) YES ( ) NO

[redacted] / 24 Jan 25

SYSTEM	TASK	Specification	Record/Reading
	U-bolt and Fist Grip Clips: Extreme care should be exercised to assure proper orientation of U-bolt clips. The U-bolt segment shall be in contact with the wire rope dead-end. The orientation, spacing, torquing, and number of all clips shall be in accordance with the crane manufacture's specifications.	API SPEC 2C	(✓) YES ( ) NO
	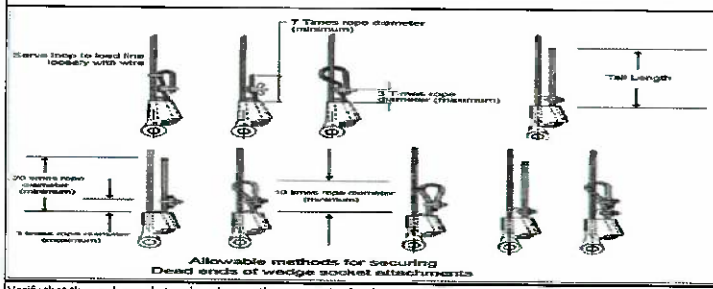 Allowable methods for securing Dead ends of wedge socket attachments	API SPEC 2C	Model ans Size wedge socket. Main hoist. Model.....2 1/2..... Size..... Aux.Hoist. Model.....1/16..... Size.....
	Verify that the wedge socket and wedge are the correct size for the rope in use and record the size	API SPEC 2C	(✓) YES ( ) NO
Sheaves & Bearings	Lubricate all sheave bearings.	API RP 2D	( ) YES ( ) NO
	Visually inspect all sheaves and bushings for cracks, wear and deterioration	API RP 2D	(✓) YES ( ) NO As found.....Good.....
	Visually inspect wire rope track of sheave for rope imprints, wear and deterioration. If damage exist sheave should be resurfaced or replaced.	API RP 2D	(✓) YES ( ) NO As found.....Good.....
	Pins retained by snap rings, bolt lock shafts, plates lock should be checked for missing or loose for all	API RP 2D	(✓) YES ( ) NO
	Check wirerope guards and keepers for proper location and condition.	API RP 2D	(✓) YES ( ) NO
	Determine if wire rope is jumping the sheaves, by looking for signs of damage on the sheave brim	Industry Standard	(✓) YES ( ) NO
	Sheave Rope Profile for optimum Rope life the sheave groove profile should be correctly matched to the rope diameter	Industry Standard	(✓) YES ( ) NO
	Check rope sheave should be machine grooved to adepth of not less than 1.5 times the norminal diameter of the rope	Industry Standard	(✓) YES ( ) NO
	MAIN POINT SHEAVES: Note;.....on standard.....	Industry Standard	No.1 (✓) YES ( ) NO No.2 (✓) YES ( ) NO
	AUX SHEAVES: Note;.....on standard.....	Industry Standard	No.1 (✓) YES ( ) NO
	IDLER SHEAVES: Note;.....on standard.....	Industry Standard	AUX. (✓) YES ( ) NO Main (✓) YES ( ) NO
	Pins for bronze bushing and straight roller bearing should have a running clearnace of .031 inch/ sheave of end play and should be adjusted accordingly.(count from left)	Industry Standard	( ) YES ( ) NO
	MAIN POINT SHEAVES:	Industry Standard	Sheave No.1.....20..... inch Sheave No.2.....20..... inch
	AUX SHEAVES:	Industry Standard	Sheave No.1.....15..... inch
	IDLER SHEAVES:	Industry Standard	Sheave AUX.....20..... inch. Sheave Main.....20..... inch.
	Ensure the sheaves are aligned and the fleet angle is correct **Remark ; Wire rope User's Manual allows 2 degree on grooved winch drum, Smooth Drum shuold be not more than 1-1/2 degree	API RP 2D	(✓) YES ( ) NO
	Determine if wire rope size and sheave sizes/grooves are compatible and record size. Sheave pitch diameter (D) to nominal wire rope diameter (d) ratio (D/d) shall not be less than 18:1	API SPEC 2C	(✓) YES ( ) NO
	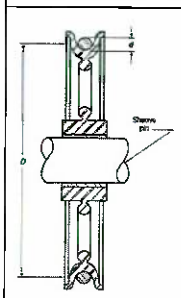 MAIN POINT SHEAVES: SHEAVE D / WIRE ROPE d = >18	API SPEC 2C	18 inch (D) 0.750 inch (d) 24 (Ratio D/d)
	AUX SHEAVES: SHEAVE D / WIRE ROPE d = >18	API SPEC 2C	14 inch (D) 0.562 inch (d) 24.9 (Ratio D/d)
	IDLER SHEAVES: SHEAVE D / WIRE ROPE d = > 18 (If applicable)	API SPEC 2C	18 inch (D) 0.745 inch (d) 24 (Ratio D/d)
	MAIN BLOCK SHEAVES: SHEAVE D / WIRE ROPE d = > 16	API SPEC 2C	16 inch (D) 0.75 inch (d) 21.3 (Ratio D/d)
Load Block	Load Block: Check the load block for cleanliness, binding sheaves, damaged or worn sheaves, worn or distorted sheave pins, broken bolts, and worn cheek weights. Note ;.....	Industry Standard	(✓) YES ( ) NO As found.....Good.....
	Hook: Check the hook damage, excessive wear to the hook safety latch, hook swivel trunnions, thrust collar, securing, damage or missing lubrication fittings, proper lubrication, cracks and gouges, and if visibly bent or twisted or has been exposed to welding or arching. Note ;.....	Industry Standard	(✓) YES ( ) NO As found.....Good.....
	Hook: Tip has been bent more than 10 degree out of plane from the hook body	Industry Standard/API RP2D7	(✓) YES ( ) NO As found.....Good.....
	Inspect the Pins for bronze bushing and straight roller bearing should have a running clearnace of .031 inch/ sheave of end play and should be adjusted accordingly	Industry Standard	(✓) YES ( ) NO
	Inspect Hook or shackle to swivel case clearance is set at .031 to .062 inch, Clearance exceeding .12 to .18 (ONLY CROSBY BRAND)	OEM Crosby	(✓) YES ( ) NO
	OEM STANDARD RECOMMEND that Crane block removal from service untill replaced and repair following below	OEM STANDARD	

[redacted] / 24 Jan 24

SYSTEM	TASK	Specification	Record/Reading
	- Elongated center pin and hook trunnion holes exceeding 5% of Original diameter	OEM STANDARD	(✓) YES ( ) NO As found GOOD
	-Material loss due to wear exceeding 10% of original section	OEM STANDARD	(✓) YES ( ) NO As found GOOD
	-Sheave wire rop groove diameter smaller than 2.5%	OEM STANDARD	(✓) YES ( ) NO As found GOOD
	Loosened tie bolts nuts, center pin round nuts, check weight cap screws and hook nut cap screws. Tie bolt nuts to be torqued to 35-40 ft.Lbs and restaked, all other fasteners wrench tight	OEM STANDARD	(✓) YES ( ) NO
	Throat opening - any distortion causeing an increase in throat opening of 5% not ot exceed 1/4 in. (6 mm.)(or as recommended by the manufacturer)	ASME B30.10	(✓) YES ( ) NO
	Inspect rope track worn in sheave groove, sheave must be resurface or replace	API RP 2D	(✓) YES ( ) NO
	Ensure the load block is not using "Cast Iron" cheek weights they can not be used as per API	API SPEC 2C	(✓) YES ( ) NO As found GOOD
	Determine if all hooks are equipped with properly operating safety latches and check for proper functioning	API RP 2D	(✓) YES ( ) NO
	Lubricate sheave bearings and swivels	OEM Manual	(✓) YES ( ) NO
	Re-thighten nut firmly to point at which trunion will just rotate, the Re-tighten set-screw in nut and thread condition as in the picture below,	Industry Standard	(✓) YES ( ) NO
	Last NDE inspection record	Industry Standard	Last inspect date_____
	RECORD LOAD BLOCK INFORMATION : Manufacturer:	OEM Manual	MCKISSICK
	Model:	OEM Manual	MB35DIG M
	Serial Number:	OEM Manual	0150426
	Record Load block measurements and details for future comparison with historical data	Industry Standard	(✓) YES ( ) NO
	A - Block OD	Industry Standard	20 mm/ inch
	B - Block length	Industry Standard	9 1/4 mm/ inch
	C - Center of Pin to hook Saddle	Industry Standard	32 mm/ inch
	D1 - Sheave Diameter	Industry Standard	16 mm/ inch
	E - Block Width	Industry Standard	38 1/2 mm/ inch
	F - Throat Opening	Industry Standard	7 mm/ inch
	G - Trunnion	Industry Standard	0.062 mm/ inch
Aux. Ball	Inspect Auxiliary ball for cleanfiness, binding swivel, work pad-eye hole. Inspect the hook damage, excessive wear to the hook safety latch, Bent connector plates,Severe corrosion pitting, hook swivel trunnions, thrust collar, securing, damage or missing lubrication fittings,Loose, missing or damaged retaining nuts, cotter pins or swivel set screws ,Missing or illegible rating and warning tags, proper lubrication, cracks and gouges, and if visibly bent or twisted or has been exposed to welding or arching.	Industry Standard	(✓) YES ( ) NO
	Hook: Tip has been bent more than 10 degree out of plane from the hook body	Industry Standard/API RP2D7	(✓) YES ( ) NO
	OEM STANDARD recommend that Crane overhaul ball removal from service untill replaced and repair following below	OEM STANDARD	
	- Elongated ball pin holes, hook latch pin holes and swivel eye exceeding 5% of original diameter,	OEM STANDARD	(✓) YES ( ) NO As found on standard
	-Swivel end play gap exceeding .08". Excessive end play indicates damaged internal set screw	OEM STANDARD	(✓) YES ( ) NO As found on standard
	-Material loss due to wear exceeding 10% of original section	OEM STANDARD	(✓) YES ( ) NO As found on standard
	Throat opening - any distortion causeing an increase in throat opening of 5% not ot exceed 1/4 in. (6 mm.)(or as recommended by the manufacturer)	ASME B30.10	(✓) YES ( ) NO
	All hooks that lift personnel are to have a positive locking safety latch **locking Pin to be used while lifting personnel**	API RP 2D	(✓) YES ( ) NO
	*** Temperature Effected : When hooks are to be used at temperature above 400° F. (204°C) or below -40°F (-40°C), the hook manufacturer or a qualified person should be consulted *** Chemically Active Environment : The strength of hooks can be affected by chemically active environments, such as caustic or acid substances or fumes. The hook manufacturer or qualified person should be consulted before hooks are used in chemically active environment	ASME B30.10	
	Verify to ensure nut firmly at which trunion rotate. Identify to set-screw in nut/ swivel/ counter pin and thread condition.	Industry Standard	(✓) YES ( ) NO
	Last NDE inspection record	Industry Standard	Last inspect date_____
	RECORD AUX BALL INFORMATION : Manufacturer:	OEM Manual	MCKISSICK
	Model:	OEM Manual	MB07T150E
	Serial Number:	OEM Manual	0196260
	Record Auxiliary Ball measurements and details for future comparison with historical data: For Model MB07T200E ONLY	Industry Standard	
	AA Dimensions 3.0 Inch	Industry Standard	3 mm/ inch
	A Dimensions 24.89 Inch	Industry Standard	24.5 mm/ inch
	B Dimensions 21.71 Inch	Industry Standard	21.5 mm/ inch
	C Dimensions 12.50 Inch	Industry Standard	12.5 mm/ inch
	D Dimensions 1.61 Inch	Industry Standard	1.6 mm/ inch
	E Dimensions 1.81 Inch	Industry Standard	1.8 mm/ inch
	F Dimensions 1.38 Inch	Industry Standard	1.4 mm/ inch
	H Dimensions 1.38 Inch	Industry Standard	1.75 mm/ inch
	I Dimensions 0.88 Inch	Industry Standard	0.86 mm/ inch
	J Dimensions 1.31 Inch	Industry Standard	1.7 mm/ inch
Safety system	Check Condition anti - two block , hanging chain ,eye bolts , fix bolts , shackle for missing , corrosion , erosion , deformation	API RP 2D	(✓) YES ( ) NO

[redacted] / 24 Jan 24

SYSTEM	TASK		Specification	Record/Reading
	Check anti - two block kick out plate for freely movement		Company Spec/Standard	(✓) YES ( ) NO
	Check anti-2-block device proper function of Main winch		Company Spec/Standard	(✓) Function ( ) False
	Check anti-2-block device proper function of Aux. winch		Company Spec/Standard	(✓) Function ( ) False
	Check relation of boom radius and boom angle (lowest, middle, highest) with refrence to load chart. Recharge fluid W-15 to load indicator, if required.		API RP 2D	(✓) YES ( ) NO
	Functional test of emergency lowering system (See procedure in Emergency Load Lowering Box). Note: Keep for 1 Yr PM to sustain crane mechanic competency. Caution: Function test must be performed on top deck with max 2-foot height.		Company Spec/Standard	(✓) YES ( ) NO ( ) N/A
	Visually check emergency load lowering kit. Ensure EMERGENCY LOWERING PROCEDURE and MATERIAL LIST are in the box. - Ensure ALL items shown on the list are in the box and in good condition - SECURE THE BOX WITH A TIE WRAP.		Company Spec/Standard	(✓) YES ( ) NO ( ) N/A
Slew Mechanism	Visually check for damage and excessive wear on gear teeth		OEM Manual	(✓) YES ( ) NO
	Visually check slew gear box in the area of oil seal for any leaks		API RP 2D	(✓) YES ( ) NO
	RECORD SLEW GEAR BOX INFORMATION :	Manufacturer:	OEM Manual	Rotex
		Model:	OEM Manual	
		Serial Number:	OEM Manual	M05089-A4
	CHECK and RE-TORQUE swing drive gearbox mounting bolts at following brands: - ESKRIDGE, Model: 250 = 150 FT-LBS		API RP 2D	(✓) Yes ( ) No
	Check swing gearbox oil level/condition, top up if required		OEM Manual	(✓) YES ( ) NO
	Monitor slew gearbox oil condition by visually examine for burnt smell, metal particles, and/or other contaminants, record and change if found.	Meropa 220	OEM Manual	(✓) CHANGE OIL ( ) NOT CHANGE OIL
	Change slew gear box oil		OEM Manual	(✓) CHANGE OIL ( ) NOT CHANGE OIL
	Grease all pivot points of slew ring (bearing)		OEM Manual	(✓) YES ( ) NO
	Grease open gears (pinion)		OEM Manual	(✓) YES ( ) NO
	Rotate crane 360 degree and check smoothness of operation		OEM Manual	(✓) YES ( ) NO
	Check swing drive static parking brake for proper operation Caution: DO NOT stop the swing of the crane with this static brake (parking brake)		OEM Manual	(✓) YES ( ) NO
	Check swing drive dynamic parking brake for proper operation		OEM Manual	(✓) YES ( ) NO
	Check swing lock mechanism condition; corrosion ,dent , loos all part,worn and wear		OEM Manual	(✓) YES ( ) NO As found condition N/A
	Check swing lock mechanism freely lock and unlock for function. **Check and inspect for hydraulic for leaks on actuator model.**		OEM Manual	(✓) YES ( ) NO As found condition N/A
	Check condition of slew ring bolts e.g. Bolt grade and washers. Caution: Use only hardened flat washers under head of bolt. Do not use lock washers, or regular flat washers.		Industry Standard	(✓) YES ( ) NO As found condition GOOD
	Monitor ball-ring grease sample. If found wear and tear particles, take sample and send to lab. **Wear assessment by grease sample analysis—wear may be monitored by periodic grease sample analysis as describe in this section. Grease samples should be collected every twelve months as a minimum and the results of the analysis recorded; this period should be shortened if obvious metal or contaminants are present.		API PR 2D	( ) SEND TO LAB (✓) NOT SEND TO LAB As found 0.032
	Verify crane condition and load test as separate procedure. **Table 1—Static/Onboard Test Load and Radius** Static/Onboard Rated Load at a Specific Radius lb (kg) — Test Loads In Excess of Static/Onboard Rated Load at a Specific Radius ≤ 40,000 (18,144) — 25 % > 40,000 ≤ 100,000 (>18,144 ≤ 45,356) — 10,000 lb (4536 kg) > 100,000 (45,356) — 10 %		API 2C	(✓) YES ( ) NO Specific test load 6,615 lbs.
	Verify crane condition and load test as separate procedure. " Record crane load test in load test form."		Company Standard	(✓) YES ( ) NO

Risk Level Definitions: The following 3 levels indicate the impact the noted deficiency poses to the operation or structural integrity of the equipment:

Level 1 = Incidental	Level #2 = Restricted Operation	Level #3 =Out of Service
Minor deficiency that is recommended to be promptly addressed, but poses no safety and/or environmental risk. The crane can still be operated at full duty.	Deficiency identified that has the potential to limit, de-rate or damage the crane, its surroundings and/or the environment. The duty and locked/ tagged out until the crane's duty and operation should be de-rated or service restricted.	The crane should be removed from duty and locked/ tagged out until the deficiency is rectified.

System:	Risk Level:	Component:		In Accordance with:
		Location:		Date Originated:

Description: Engine Coupling of TURBO leaked.

Recommended Action: need to NEX Plan.

Recommended urgency timeframe for corrective action:

Completed Date: Completed By:

System:	Risk Level:	Component:		In Accordance with:
		Location:		Date Originated:

Description:

Recommended Action:

Recommended urgency timeframe for corrective action:

Completed Date: Completed By:

System:	Risk Level:	Component:		In Accordance with:
		Location:		Date Originated:

[redacted] / 24 Jan 25.

SYSTEM	TASK			Specification	Record/Reading
Description:					
Recommended Action:					
Recommended urgency timeframe for corrective action:		Completed Date:		Completed By:	

System:	Risk Level:	Component: / Location:		In Accordance with: / Date Originated:	
Description:					
Recommended Action:					
Recommended urgency timeframe for corrective action:		Completed Date:		Completed By:	

System:	Risk Level:	Component: / Location:		In Accordance with: / Date Originated:	
Description:					
Recommended Action:					
Recommended urgency timeframe for corrective action:		Completed Date:		Completed By:	

System:	Risk Level:	Component: / Location:		In Accordance with: / Date Originated:	
Description:					
Recommended Action:					
Recommended urgency timeframe for corrective action:		Completed Date:		Completed By:	

23 Jan 25

Job completed by.

[redacted]

THE PEDESTAL CRANE CONDITION VERIFICATION

Date : 23 JAN 25			
Crane Owner : CTEP/ COTL Field: BENCHAMAS Platform/ Vessel: BEWO			
Crane Owner 's representative : (Mech Supv./ M'Dent) [redacted]			
Qualified inspector : (Qualified Crane Mechanic)			
Inspector 's company / agency : (Third Party or Outsource to witness if applicable)			
Manufacture Nautilus Fabrication by oil state Year of Fabrication APR 2001 Country USA Model / Serial 200 B 50 / 010107C Standard API Edition Fifth Edition 1995			Remark
Safe Working Load (SWL) —> OEM	19.3 Metric Tonnes		
Safe Working Load (SWL) —> Existing via MOC, if applicable	– Metric Tonnes		
Boom length, Main	50 Ft		
Boom length, Auxiliary if applicable	– Ft		
Part of line main hoist	4 Part line		
Part of line auxiliary hoist	1 Part line		
Safe Working Load at longest boom radius	50 ft	33783 Metric Tonnes/ Lbs	
Safe Working Load at shortest boom radius	6 ft	42605 Metric Tonnes/ Lbs	
The document of crane specification for Testing , Maintenance and Inspection are provided by:	OEM	MOC / Crane Engineer	
Has the crane ever been modified by MOC ? (To verify if this crane is modified with MOC —> Allow to test the crane. if this crane is modifed without MOC —> Not allow to test the crane)	YES	NO	(Employers are not allowed to modify or adjust any part of cranes or dericks or consent to other persons to do these things, that might reduce the safety of the employees who work with the cranes or derricks).
Does the rotating part have proper guard in place?	YES	NO	(Need mitigation plan)
Is the ladder and hand rail in place?	YES	NO	(Need mitigation plan)
Is the maintenance platform in place?	YES	NO	(Need mitigation plan)
Is the SWL tag labelled on crane pedestal, main block or aux ball?	YES	NO	(Need mitigation plan)
Verify if the crane major component damaged or not	YES (Need to repair or mitigate unsafe condition with MOC before testing)	NO	(Employers shall not allow employees work with damaged/ unsafe cranes or derricks)
Inspect boom end connections, for bends, dents, corroded areas, cracked welds, and signs of mechanical damage, wear, etc. **any deviation should be reported** Level 1 = Incidental : Minor deficiency that is recommended to be promptly addressed, but poses no safety and/or environmental risk. The crane can still be operated at full duty. --> Allow to test Level #2 = Restricted Operation: Deficiency identified that has the potential to limit, de-rate or damage the crane, its surroundings and/or the environment. The duty and locked/ tagged out until the crane's duty and operation should be de-rated or service restricted. —> To be derated Level #3 = Out of Service;The crane should be removed from duty and locked/ tagged out until the deficiency is rectified. —> Not Use	YES (To be verified)	NO	
Function Load Testing			
1. Verify Crane SWL (Existing)	3.0 Metric Tonnes		
2. Verify routine maximum actual load.	2.4 Metric Tonnes		
3. Select the specimen load to be more than actual routine load 1.25 times but not more than SWL. Example # 1 : Crane 's SWL is 18 Metric Tonnes. The routine maximum actual load is 2.4 Metric Tonnes. Therefore, the load testing shall be 2.4 x 1.25 = 3 Metric Tonnes. Example # 2 : Crane 's SWL is 18 Metric Tonnes. The routine maximum actual load is 16 Metric Tonnes. By calculation, the load testing is 16 x 1.25 = 20 Metric Tonnes more than SWL (18 MTon). **Therefore, the load testing shall be 18 Metric Tonnes equal to SWL.**	3.0 Metric Tonnes		
4. Use Auxiliary Winch if specimen load less than or equal 3 Metric Tonne	YES	NO	
5.Use Main Winch if specimen load more than 3 Metric Tonne	YES	NO	
6. The record of load testing : Fill in "Function Test Record" sheet attached.			

RECORDED FUNCTION TEST PROCEDURE

1. CHECK AND RECORD READING RADIUS AND BOOM INDICATIOR AT FOUR (4) VALUES INCLUDING MAXIMUM AND MINIMUM.

(ALL REDIUS MEASUREMENT ARE TO BE TEKEN FROM THE CENTERLINE OF CRANE ROTATION)

ACTUAL	INDICATED RADIUS (FT)
A) 15' (MINIMUM)	15
B) 20'	20
C) 25'	25
D) 30' (INTERMIDIATE)	30
E) 40'	40
F) 50' (INTERMIDIATE)	50
G) 60'	60
H) 75' (MAXIMUM)	75

2. CHECK AND RECORD READING ON BOOM ANGLE / DEGREES.

SPECIFICATION	INDICATED BOOM ANGLE (DEGREES)
1). MAXIMUM. .....82..... DEGREES	82
2). INTERMEDIATE. .....67..... DEGREES	67
3). INTERMEDIATE. .....47..... DEGREES	47
4). MINIMUM. .....0..... DEGREES	0

3. READING ON LOAD INDICATOR WITHOUT SLINGS OR LOAD / LBS. (LOAD BLOCK + WIRE ROPE)

ACTUAL	INDICATOR READ FREE LOAD, (LBS)
1). MAXIMUM RADIUS 600 LBS.	700
2). MINIMUM RADIUS 1500 LBS,	800

4. CHECK AND RECORD ENGINE HIGH IDLE SPEED / RPM.

SPECIFICATION	INDICATED OF FUNCTIONAL (RPM)
1). IDLE SPEED 850 RPM	850
2). LOW SPEED — RPM	—
3). HIGH SPEED 2200 RPM	2200

5. FUNTIONALLY TEST THE FOLLOWING.

ACTUAL	INDICATED OF FUNCTIONAL (TESTED)
A) MAIN HOIST ANTI -TWO BLOCK.	Function
B) AUXILIALY HOIST ANTI -TWO BLOCK.	Function
C) HIGH BOOM ANGLE KICK OUT.	N/A
D) LOW BOOM ANGLE KICK OUT.	N/A
E) PRIME MOVER SHUTDOWN.	Function
F) EMERGENCY SHUTDOWN.	Function
G) ROTATE CRANE 360 LEFT.	smoot
H) ROTATE CRANE 360 RIGHT.	smoot

6. RECORD HYDRAULIC RELIEF VALVE PRESSURE SETTING ON FOLLOWING HYDRAULIC FUNCTION:

SPECIFICATION	INDICATED PRESSURE (PSI)
A) MAIN HOIST 2950 PSI.	2950
B) AUXILIALY HOIST 2950 PSI.	2950
C) BOOM HOIST 3040 PSI.	3040

TEST CONDUCTED BY: Noppadol T. POSITION : CR-MECH

CRANE OPERATOR : Arpisan C. POSITION : CR-MECH

COMMENTS : DATE : 23-Jan-25

34 PM

Sheet: 180B1-80 (MS)_Eng 3126_Rev.2024

BEWU

W/O: 1247167

CRANE Mfg. : Nautilus
MODEL: 180B1-80 (MS)
SERIAL NUMBER :

LOCATION
BEWU

DATA BASE - PM JOB TASK CARD

Crew Size:
Estimated Hours:

SYSTEM	TASK		Specification	Record/Reading
Safety	Perform Job Safety Analysis (JSA)		Company Spec/Standard	(✓) YES ( ) NO
	Obtain "COMPANY" PERMIT TO WORK		Company Spec/Standard	(✓) YES ( ) NO
	Perform Tool Box Talk		Company Spec/Standard	(✓) YES ( ) NO
	BEFORE/AFTER JOB EXECUTION: Ensure to comply with isolation procedure (LOCK OUT/TAG OUT, WARNING SIGNS and BARRIERS).		Company Spec/Standard	(✓) YES ( ) NO
Required Tools	Insure proper tools are available at the job site		Company Spec/Standard	(✓) YES ( ) NO
	Tool bag		Company Spec/Standard	(✓) YES ( ) NO
	Tool box		Company Spec/Standard	(✓) YES ( ) NO
	Tool Container		Company Spec/Standard	(✓) YES ( ) NO
	MPI equipment and operator		Company Spec/Standard	(✓) YES ( ) NO
	Check safety harness Software and Hardware should be good condition before use		Company Spec/Standard	(✓) YES ( ) NO
	Check Rescue Equipment ready to use onsite		Company Spec/Standard	(✓) YES ( ) NO
	Portable Scaffolding and Crew if require		Company Spec/Standard	(✓) YES ( ) NO
Lubricants	Insure proper lubricants and consumables are available at the job site.		Company Spec/Standard	(✓) YES ( ) NO
	Hydraulic System - Hydraulic Oil	Rando HD-68	OEM Manual	(✓) YES ( ) NO
	Slew Gearbox - Gear Oil	Meropa 220	OEM Manual	(✓) YES ( ) NO
	Auxiliary Hoist - Gear Oil	Meropa 220	OEM Manual	(✓) YES ( ) NO
	Main Hoist - Gear Oil	Meropa 220	OEM Manual	(✓) YES ( ) NO
	Grease Points - Lithium Based **IT MUST NOT INCLUDE MOLYBDENUM DISULPHIDE**	MULTIFAK EP#2	OEM Manual	(✓) YES ( ) NO
	Open Gear Teeth - Open Gear Lube highly water resistant and of an adhesive nature.	OMEGA 73	OEM Manual	(✓) YES ( ) NO
	Pneumatic Lubricator	SAE Grade 10	OEM Manual	(✓) YES ( ) NO
	Wire rope Lubricant Company preferred grade	Birlube 70	OEM Manual	(✓) YES ( ) NO
	Engine Oil - SAE Grade 15W-40 (Delo Gold)	15W-40	OEM Manual	(✓) YES ( ) NO
	Safe Load Indicator fluid	W-15	OEM Manual	(✓) YES ( ) NO
	Engine Radiator - Should have radiator preservatives additives	Cat® SCA	OEM Manual	(✓) YES ( ) NO
Consumables	Spray Cold Galvanize		Company Spec/Standard	(✓) YES ( ) NO
	Denso Tape		Company Spec/Standard	(✓) YES ( ) NO
	WD-40		Company Spec/Standard	(✓) YES ( ) NO
History Review	Before starting work, tasks preparation at least 1 day prior to starting work: 1. Review history PM/ CM from Roving Team, 2. Review last PM/ CM/ PMI from Crane Mech, 3. List out all punch list and prepare parts. 4. Review last Certificate task performed		API RP 2D	(✓) YES ( ) NO
	Require to update part history from Crane Mech on following main compenents to ensure the right parts are prepared: - Aux/ Main/ Boom Cylinder, Engine, Swing Gearbox, etc. Reference: Crane OEM information of each part need to be recorded - Manufacturer & Contact info - Model & serial number - Installation date		Company Spec/Standard	(✓) YES ( ) NO
	Review history data from Certificates and incorporate into current PM: - Pull Test Certificates (ongoing update, 4 yr. history). - Load Test Certificates (ongoing update, 4 yr. history). - Wire Rope Certifications (running rope and standing rope) (life of rope). - Hoist Certifications for hoist classified as "personnel handling" hoist.		API RP 2D	(✓) YES ( ) NO
	Review Last Preventative Maintenance Records (Inspection Reports) - Pre-use (Pre-Post Inspection) - 6 Monthly (API RP 2D Not Defined, Company Standard) - 1 Yearly (API RP 2D Defined Annual Inspection)		API RP 2D	(✓) YES ( ) NO
Lifting Gear Preparation	Visually Inspect (Sling, sling hooks and shackles) include Websling / Chain		Company Spec/Standard	(✓) YES ( ) NO
	Check color code / Tag & date inspection		Company Spec/Standard	(✓) YES ( ) NO
General	Determine if access route to-from crane is clean, safe, unobstructed and adequately protected against falls, tripping and slipping		Company Spec/Standard	(✓) YES ( ) NO
	Check drain lines and drip pans for deterioration		API RP 2D	(✓) YES ( ) NO
	Remove any sediment collected in the bottom of drip pans		Industry Standard	(✓) YES ( ) NO
	Check for general crane and components for loss of protective coating and corrosion		Industry Standard	(✓) YES ( ) NO
	Check for missing or loose ,corrosion, deformation pins, pin keepers, bolts, nuts, fasteners of all laders, cages and working platform		API RP 2D	(✓) YES ( ) NO
	Apply grease to exposed grease parts (control valve spools, ball-ring gear, parking brake valve, etc.)		OEM Manual	(✓) YES ( ) NO
Prime Mover	Engine Caterpillar		OEM Manual	(✓) YES ( ) NO
	CATERPILLAR MODEL 3216	S/N.:	OEM Manual	92R03234
		AR.No.:	OEM Manual	AR-132-4393
	Change engine lube oil & oil filter and check the condition of old oil. As found ; OK		OEM Manual	(✓) YES ( ) NO
	Check diesel tank level, top up if required.		OEM Manual	(✓) YES ( ) NO
	Check / Clean crankcase breather cap. Change if required		OEM Manual	(✓) YES ( ) NO
	Check / Clean air cleaner filter, Replace if require. (Note : Include inspect air cleaner housing)		OEM Manual	(✓) YES ( ) NO
	Check condition and inspect of the radiator and cap.		OEM Manual	(✓) YES ( ) NO
	Check for any signs of leaks on or around the engine ie; Crankshaft seal for front & rear seal , Engine oil cooler. As found; not leak		OEM Manual	(✓) YES ( ) NO
	Check condition exhaust system for leaks, corrosion, insulation and general. As found ; Good condition not leak		OEM Manual	(✓) YES ( ) NO
	Check condition of all engie hoses and tube. (Fuel supply,Cooling system and Lube oil system. As found; Good condition		OEM Manual	(✓) YES ( ) NO
	Drain water and sediment form diesel tank. As found ; OK		OEM Manual	(✓) YES ( ) NO
	Check / Clean Diesel tank level sightglass and diesel tag.		OEM Manual	(✓) YES ( ) NO
	Apply grease of fan bearing/shaft.		OEM Manual	(✓) YES ( ) NO
	Check and inspect the vibration damper and pulley. As found ; OK		OEM Manual	(✓) YES ( ) NO
	Change water coolant and check condition base of water coolant and record PH.		OEM Manual	(✓) YES ( ) NO
	COOLANT PARAMETERS (PH):	6 or higher	OEM Manual	PH = 7
	HOUR METER PARAMETERS: LAST READING	_____ HRS	OEM Manual	623 HRS
	Check and retigthen the bolts of all engine base. / Inspection mouting rubber. As found ; OK		OEM Manual	(✓) YES ( ) NO
	Inspect the engine fan blades that there is a break is it severely distorted or rusted. As found ; OK		OEM Manual	(✓) YES ( ) NO

SYSTEM	TASK			Specification	Record/Reading
	Change and adjust the tension engine belts. Remark; To check belt Tension, after has engine run more than 30 minules apply 400 N (90 lbs) of force midway between the pulleys. Correctly adjusted belts with deflect 13 to 19 mm (1/2 to 3/4 inch).			OEM Manual	(✓) YES ( ) NO
	Check engine HYD starter drive gear bendix and fly wheel gear teeth condition and record. **Replace if required"			OEM Manual	(✓) YES ( ) NO Bendix Gear : 85 % Fly wheel Gear teeth : 90 %
	Check and inspect condition the Bendix of hydraulic Starter motor.			OEM Manual	(✓) YES ( ) NO
	Lubricate and check engine throttle system.			OEM Manual	(✓) YES ( ) NO
	Determine if the tachometer operates properly: Record Value of Idle & Max Speed (RPMs) Note: Too low Idle (RPMS) will cause excessive worn at winch brake			OEM Manual	
	ENGINE RPM SPECIFIC	IDLE SPEED	850-950 RPM	OEM Manual	850 RPM
		MAX SPEED	2200 RPM	OEM Manual	2200 RPM
	Confirm engine oil pressure as per Parameters below and Record Value:			OEM Manual	
	ENGINE OIL PRESSURE SPECIFIC	Minimum	Not lower then 30 PSI	OEM Manual	30 PSI
		Maximum	70 PSI	OEM Manual	55 PSI
	Confirm engine fuel pressure Parameters are correct and Record Value:			OEM Manual	
	ENGINE FUEL PRESSURE SPECIFIC** **Note;Fuel pressure at high idle is lower than 105 kPa (15 psi)RAMETERS	Normal	Green Range/ 15 PSI	OEM Manual	(✓) YES ( ) NO
	Confirm engine temperature Parameters and Record Value:			OEM Manual	
	ENGINE WATER TEMP SPECIFIC	NORMAL	120 - 180 degrees F	OEM Manual	180 F
	Test engine SAFETY DEVICE- ensure engine kill cable shuts off FUEL supply			API RP 2D	(✓) Function ( ) False
	Test engine SAFETY DEVICE- ensure EMERGENCY KILL CABLE - shuts off AIR supply			API RP 2D	(✓) Function ( ) False
	Test engine SAFETY DEVICE- ensure ENGINE low lube oil - releases OIL PRESSURE to ctivate Alarm Air System ***Note*** Engine oil pressure low alarm at 20 PSI			Company Spec/Standard	(✓) Function ( ) False
	Test engine SAFETY DEVICE- ensure HIGH TEMP - releases OIL PRESSURE to activate Alarm Air System			Company Spec/Standard	(✓) Function ( ) False
	Change water separator filter.			OEM Manual	(✓) YES ( ) NO
	Check the general conditionand functioning of turbocharger. Note;			OEM Manual	( ) Leak (✓) Not Leak
	Change fuel filter and inspect the primary hand pump.			OEM Manual	(✓) YES ( ) NO
	Check water temperator regulator.(Thermostat). Change if require refer from cooling temperature.			OEM Manual	(✓) YES ( ) NO
	Check general condition the Governor and control linkage. (Inspect the throtle linkage)			OEM Manual	(✓) YES ( ) NO
	Check or adjust the engine valve lash. (Intake vale = 0.015", Exhaust valve = 0.025")			OEM Manual	(✓) YES ( ) NO
	Check or adjust the fuel timing control linkage of Unit Injector (CAT 3126) Reference: Fuel timing injection length, use the following references to obtain information: - Engine Information Plate (located at valve cover) Specific data .....mm/inch. Engine S/N..... - TMI (Technical Marketing Information - located at Manual Book) - Fuel setting and related Information Fiche			Company Spec/Standard	65.05 mm/ inch (After Adjustment)
	Check condition wear of pump drive spline and record **Note; Remaining 70% of Original Spline Surface must be replace.			Company Spec/Standard	85 % Remaining
	Check condition wear of adaptor Coulping spline shaft and record **Note; Remaining 70% of Original adaptor Coulping spline shaft Surface must be replace.			Company Spec/Standard	85 % Remaining
	Check condition wear of Coulping spline and record. Re-tigthen of all lock bolts. **Note; Remaining 70% of Original adaptor Coulping spline shaft Surface must be replace.			Company Spec/Standard	85 % Remaining
Hydraulic Start System (Apply for C2-Remote P/F Only)	Check pressure system at the pressure gauge which should reach 3,000 PSI as standard when the system is FULLY charged. Record Value. (As the system cools down, the pressure should drop slightly and finally stabilised.)			OEM Manual	(✓) YES ( ) NO
	Visually inspect all hydraulic connections and hoses for leaks and retighten if necessary. (Caution: This should NOT be done if the system is under pressure.) 1. Slowly release system pressure by loosening the bleed screw on top of the hand pump. 2. Ensure no pressure remains, retighten the suspected leak fitting or replace the damaged hose or component. 3. Retighten the bleed screw on the hand pump. 4. Pump the system up to 2200 - 2600 PSI 5. Inspect that the leak was eliminated.			OEM Manual	(✓) YES ( ) NO
	Function check Accumulator Pre-charge. (Caution: This should NOT be done if the system is under pressure.) 1. Shut the engine off, release system pressure via the bleed screw on top of the hand pump 2. Retighten bleed screw and actuate the hand pump. The pressure will rapidly increase and then stabilised. This pressure is related to accumulator gas pre-charge pressure. 4. If the pressure rapidly increase to 3000 PSI, it indicates that the accumulator has lost its gas charge. 5. Troubleshoot as necessary			OEM Manual	(✓) YES ( ) NO
	Check function rechaging system by function boom down while the engine running. 1. The crane engine is running at 1,000-1500 RPM. 2. Slowly control lever boom function down for charging pressure to accumulator. 3. This pressure should read on prssure gauge between 2200 - 2600 PSI depending on the recharge ratio 80% std. (90% optional). Record Pressure Value.			OEM Manual	2600 PSI
	Check Nitrogen pressure in Accumulator ***Note**spec @ 1,500 psi as follow schematic and if found pressure loss below 1400 PSI then prepare recharge nitrogen in system			OEM Manual	400 PSI
	Every 36 months or 2000 engine running hours (approximately 1500 starts) replace the high pressure filter.			OEM Manual	(✓) YES ( ) NO ( ) N/A
Pneumatic System	Check for noisy compressor operation, which could indicate a worn drive gear coupling, a loose pulley or excessive internal wear			OEM Manual	(✓) YES ( ) NO
	Check Air Compressor external oil supply and return lines, if applicable, for kinks, bends, or restrictionsto flow			OEM Manual	(✓) YES ( ) NO
	Inspect the Air compressor discharge port, inlet cavity and discharge line for evidence of restrictions and carboning. (If excessive buildup is noted)			OEM Manual	(✓) YES ( ) NO
	Check all hose connections are sound and all mounting and pivoting connections are secure.			OEM Manual	(✓) YES ( ) NO
	Check condition / Clean and lubricate unloading valve			OEM Manual	(✓) YES ( ) NO
	Check proper air pressure is available for the system. Record Value.			OEM Manual	
	AIR SYSTEM PARAMETERS:		MAX 60 PSI	OEM Manual	60 PSI
	Visually inspection condition of air receiver for signs of corrosion or loose of structural integrity.			Industry Standard	(✓) YES ( ) NO
	Check the hose, piping and tubing for mechanical damage, corrosion, splits, blisters, cracking or excessive abrasion on the outer surface			Industry Standard	(✓) YES ( ) NO
	Drain off air filter and reciever to remove condensed water. If water is present, drain until water is removed.			Industry Standard	(✓) YES ( ) NO
	Check proper operation of pop off valve, by manually functioning valve.			Industry Standard	(✓) YES ( ) NO
	Check proper operation of manual latch valve, by manually functioning latch.			Industry Standard	(✓) YES ( ) NO
	Check proper operation of small engine alarm horn.			Industry Standard	(✓) YES ( ) NO
Hoist / Brakes	Visually check a hoist exhibits erratic operation and/or unusual noise, the hoist must be taken out of service until it is inspected and serviced by a qualified technician. Continued operation of a hoist with a defect in a critical component may lead to loss of load control, property damage, serious injury or death.			OEM Manual	(✓) YES ( ) NO
	Visual exteriors of hoist, frames, drums and flanges for damage, leaks, cracks and wear and repair/replace as required to maintain the structural integrity of the hoist.			OEM Manual	(✓) YES ( ) NO

SYSTEM	TASK			Specification	Record/Reading
	Check all hoist mounting pins, bolts or other fasteners and replace or tighten as necessary.			OEM Manual	✓ YES ( ) NO
	Lubricant level must be maintained between the minimum and maximum levels; midway up sight glass or at bottom of level plug port as equipped and check/clean plug vent. Use only the recommended type of lubricant.			OEM Manual	✓ YES ( ) NO
	Inspect Brake Valve Opening Pressure test V/V 1-1/4" PD Series : no lower than 550 PSI V/V 1-1/2" CH Series : no lower than 575 PSI	Main Aux		Braden Bulletin 527-Dec,1996	550 PSI 575 PSI
	Inspect Brake cylinder opening pressure test. CH/PD Series : 400-450 PSI.	Main Aux		Industry Standard	400 PSI 450 PSI
	Measure differancian of static and dynamic brake. CH/PD Series : 150-250 PSI.	Main Aux		Industry Standard	150 PSI 185 PSI
	Check for external oil leaks and repair as necessary. This is extremely important due to the accelerated wear that will result from insufficient lubricating oil in the hoist.			OEM Manual	✓ YES ( ) NO
	RECORD BOOM CYLINDER INFORMATION :	Boom cylinder Diameter:		OEM Manual	DIA: 12 Inch
		CY Number:		OEM Manual	L= CY1892-3 R= CY6169-A1
		Serial Number:		OEM Manual	L= 5829 R= 5489
	RECORD MAIN HOIST INFORMATION :	Manufacturer:		OEM Manual	Braden
		Model:		OEM Manual	CH175A-23010-0271
		Serial Number:		OEM Manual	09002173
	Check MAIN HOIST for proper operation and good condition			API RP 2D	✓ YES ( ) NO
	Brake test & record pressure of MAIN HOIST.			OEM Manual	✓ YES ( ) NO As found OK
	Change main hoist gear oil and inspect for small particles in the old oil. ** Refer to Onsite Gear Oil Sample Procedure ** ** Replace and send oil sample to SKL if abnormal ** ** Take photo of Oil Sampling for Reference**			OEM Manual	✓ YES ( ) NO As found Change
	RECORD AUXILIARY HOIST INFORMATION :	Manufacturer:		OEM Manual	Braden
		Model:		OEM Manual	PD12C-29064-04-1
		Serial Number:		OEM Manual	1059435
	Check AUXILIARY HOIST for proper operation and good condition			API RP 2D	✓ YES ( ) NO
	Brake test & record pressure of AUXILIARY HOIST			API RP 2D	✓ YES ( ) NO
	Change Aux. hoist gear oil and inspect for small particles in the old oil. ** Refer to Onsite Gear Oil Sample Procedure ** ** Replace and send oil sample to SKL if abnormal ** ** Take photo of Oil Sampling for Reference** Please record if any abnormal condition. Note.....			OEM Manual	( ) SEND SKL LAB ✓ NOT SEND SKL LAB
	Check pressre relief Valve: Determine hoistes' relief valve pressure gauge is working and giving accurate measurement by notice whether pressure gauge is vibrating or not. If not, set relief valve pressure in accordance with the schematic and parameters below. Record all readings.			OEM Manual	( ) YES ( ) NO
	BOOM RELIEF VALVE TEST	Relief Specific:	3,000 PSI	OEM Manual	3000 PSI
	MAIN HOIST RELIEF VALVE TEST	Relief Specific:	3,065 PSI	OEM Manual	3085 PSI
	AUX HOIST RELIEF VALVE TEST	Relief Specific:	2,800 PSI	OEM Manual	4500 PSI
	SWING RELIEF VALVE TEST	Relief Specific:	1,300 PSI	OEM Manual	1300 PSI
	Measure Pressure of hoist motor case drains and Record Value Reference Bulletin: BRADEN Inspection, Testing, Preventive Maintenance and Special Operating Instructions For Planetary Hoists PB-308 latest edition for further details.			OEM Manual	
	MAIN HOIST CASE DRAIN for Gear Motor (Down Mode).	PRESSURE	< 100 psi	Company Spec/Standard	0 PSI
	AUX. HOIST CASE DRAIN for Gear Motor (Down Mode).	PRESSURE	< 100 psi	Company Spec/Standard	0 PSI
Hydraulic System	Check hydraulic tank oil level. Oil should be visible in the sight glass. Top up as required (3/4 Tank Minimum)			OEM Manual	( ) YES ( ) NO
	Check hydraulic oil condition. (Check if running hours are more than 100 hours from last oil change or during Annual inspection) ** Refer to Onsite Hydraulic Oil Sample Procedure ** ** Replace and send oil sample to SKL if abnormal ** ** Take photo of Oil Sampling for Reference**		Rando HD-68	Company Spec/Standard	( ) SEND SKL LAB ✓ NOT SEND SKL LAB
	Inspect hydraulic tank and strainer filter. Change hydraulic oil, if required with lab confirmation.			Company Spec/Standard	✓ YES ( ) NO
Hydraulic System	Drain off 1 liter of oil to remove condensed water. If water is present, drain until water is removed and top up with clean oil			Industry Standard	✓ YES ( ) NO
	Check for any hydraulic leaks			Industry Standard	✓ YES ( ) NO
	Check the hydraulic hose, piping and tubing for mechanical damage, corrosion, splits, blisters, cracking or excessive abrasion on the outer surface			API RP 2D	✓ YES ( ) NO
	Check that all hydraulic hose connections are sound and that all mounting and pivoting connections are secure.			Industry Standard	✓ YES ( ) NO
	Lubricate hydraulic swivel in pedestal and insure tie down restrains are in place and preventing the swivel from rotating with the crane structure.			OEM Manual	✓ YES ( ) NO
	Ensure the filler breather on tank is not covered or clogged			Industry Standard	✓ YES ( ) NO
	Visually inspect for missing or loose pins, pin keepers, bolts, nuts, fasteners on all pumps, motors and valves			API RP 2D	✓ YES ( ) NO
	* Re-tighten the stud bolt of hydraulic main pump and marking the nut for checking to prevent loosening. Note : Torqe spec model P76, P75, PGP/PGM350 ,PGP/PGM330 = 200 ft-lbs. , for model PGP/PGM315 = 140 ft-lbs. and PGP/PGM365 = 450 ft-lbs.			The Commercial Intertech manual	✓ YES ( ) NO
	Check the filter bypass indicator, while engine is running.			OEM Manual	✓ YES ( ) NO
	With engine running (after all other items pass inspection), check the system for leaks around fittings, hoses, valves and reservoirs			Industry Standard	✓ YES ( ) NO
	With engine running, check the source of any unusual noise or vibration that may cause or indicate equipment damage or wear			Industry Standard	✓ YES ( ) NO
	Ensure all hoses are properly rated for the system, see "Parameters" for each system for details.			Industry Standard	✓ YES ( ) NO
	Record hydraulic oil operating temperture. Note: Hydraulic fluid overheating temperature is over 180 F degrees or 82 C, degrees (reservoir temperature)			Industry Standard	130 Degree F
	Determine if hydraulic return pressure gauge is working and giving accurate measurements. Record readings				
	RECORD HYDRAULIC RETURN PRESSURE PARAMETERS:		60 PSI "maximum"	OEM Manual	60 PSI
	Check and inspect the hydraulic return filters and seals.			OEM Manual	✓ YES ( ) NO
	Function Testing and record pressures with engine at :		2,200 RPM	API RP 2D	
	BOOM FUNCTION TEST (Need Crane Mech to verify each platform)			OEM Manual	
		Cracking pressure	RECORD	OEM Manual	500 PSI

SYSTEM	TASK				Specification	Record/Reading
	Boom Angle : 60 Degree (Recommend or as applicable)	UP	Full Speed Pressure	RECORD	OEM Manual	800 PSI
		DOWN	Cracking pressure	RECORD	OEM Manual	700 PSI
			Full Speed Pressure	RECORD	OEM Manual	1450 PSI
	MAIN HOIST FUNCTION TEST (Need Crane Mech to verify each platform)				OEM Manual	
	Boom Angle : 60 Degree (Recommend or as applicable)	UP	Cracking pressure	RECORD	OEM Manual	400 PSI
			Full Speed Pressure	RECORD	OEM Manual	600 PSI
		DOWN	Cracking pressure	RECORD	OEM Manual	500 PSI
			Full Speed Pressure	RECORD	OEM Manual	1200 PSI
	AUX HOIST FUNCTION TEST (Need Crane Mech to verify each platform)				OEM Manual	
	Boom Angle : 60 Degree (Recommend or as applicable)	UP	Cracking pressure	RECORD	OEM Manual	200 PSI
			Full Speed Pressure	RECORD	OEM Manual	300 PSI
		DOWN	Cracking pressure	RECORD	OEM Manual	500 PSI
			Full Speed Pressure	RECORD	OEM Manual	1500 PSI
	SWING FUNCTION TEST (Need Crane Mech to verify each platform)				OEM Manual	
	Boom Angle : 60 Degree (Recommend or as applicable)	LEFT	Cracking pressure	RECORD	OEM Manual	200 PSI
			Full Speed Pressure	RECORD	OEM Manual	300 PSI
		RIGHT	Cracking pressure	RECORD	OEM Manual	200 PSI
			Full Speed Pressure	RECORD	OEM Manual	300 PSI
Electrical system, Crane Boom Lighting and red obstruction light	Check the electrical junction boxes, wires and connections for deterioration, desiccant bags, (replace as required)				Industry Standard	(✓) YES ( ) NO
	Check the condition of the grounding and lighting protection system.				Company Spec/Standard	(✓) YES ( ) NO
	Visually inspect boom floodlight and light guards for loose, missing, corroded				Company Spec/Standard	(✓) YES ( ) NO
	Check condition pipe support , U-bolt ,nuts of boom floodlight and Electric slipring for loose , missing , corroded				Company Spec/Standard	(✓) YES ( ) NO
	Check Electric slipring/swivel for 360° continuous rotation				OEM Munnal	(✓) YES ( ) NO
	Check Water ingress, condensation in electric slipring, red obstruction light and boom floodlight				OEM Munnal	(✓) YES ( ) NO
	Check feely movement and lubricate of boom floodlight				OEM Munnal	(✓) YES ( ) NO
	With generator in operation, intergize all lights to unsure proper function.				API RP 2D	(✓) YES ( ) NO
	Check condition of crane boom lighting and safety net is secured with strong point. * **Safety net should be replace 24 months after installation (2 year)***			Last installation date _____	Company Spec/Standard	(✓) YES ( ) NO
	Check function of crane sound signal				Company Spec/Standard	( ) YES ( ) NO (✓) N/A
	Check function of crane boom lighting at boom upper section				Company Spec/Standard	(✓) YES ( ) NO ( ) N/A
	Check function of crane boom lighting at boom lower section				Company Spec/Standard	( ) YES ( ) NO (✓) N/A
	Check function of crane boom lighting at winch skid				Company Spec/Standard	(✓) YES ( ) NO ( ) N/A
	Check function of crane boom lighting at crane cabin				Company Spec/Standard	(✓) YES ( ) NO ( ) N/A
	Check function becon light at boom tip				Company Spec/Standard	( ) YES (✓) NO ( ) N/A
	Inspection wire rope guide & Roller assembly				Company Spec/Standard	(✓) YES ( ) NO
	Visually inspect red obstruction light pipe support, u-bolts, nuts connection to hand rail for loose, missing, corroded				Company Spec/Standard	(✓) YES ( ) NO
	Visually inspect safety sling attached to the red obsruction light and its base for loose, missing, corroded				Company Spec/Standard	(✓) YES ( ) NO
	Visually inspect red obstruction light function. The light is designed to turn on all the time.				Company Spec/Standard	(✓) YES ( ) NO
Operator Control Station	Check general condition of control panel, bolts, paint security, etc.				API RP 2D	(✓) YES ( ) NO
	Determine if there is a serviceable fire extinguisher in the vicinity of the crane				Company Spec/Standard	(✓) YES ( ) NO
	Determine if correct load chart is in use and easily visible for operator				API RP 2D	(✓) YES ( ) NO
	Determine if charts, indicators and hand signal chart are in the cabling and firmly attached				API RP 2D	(✓) YES ( ) NO
	Determine if angle/radius indicator plate is easily visible to operator and is moving freely.				API RP 2D	(✓) YES ( ) NO
	Check condition of control levers and determine if they "dead-man" back to the neutral position.				API RP 2D	(✓) YES ( ) NO
	Check condition of pressure gauges.				API RP 2D	(✓) YES ( ) NO
	Check proper control labels are firmly installed, completely legible and properly labeled				API RP 2D	(✓) YES ( ) NO
	Check controls for freedom-of-movement				API RP 2D	(✓) YES ( ) NO
	Check condition , Leak, freely moement of Dynamic swing break system *** Note; if HYD Oil loose in CYD reservoir must be refill*				OEM Manual	(✓) YES ( ) NO
	Check condition , Leak, freely moement of Accelerate System *** Note; if HYD Oil loose in CYD reservoir must be refill*				OEM Manual	(✓) YES ( ) NO
	Check all safety glass and rubber seal for proper condition				API RP 2D	(✓) YES ( ) NO ( ) N/A
	Function Test Horn. Note;.....				Industry Standard	(✓) YES ( ) NO ( ) N/A
	Ensure PRE/POST Check List and Pocket Manual in the cabin. Note;.....				Company Standard	(✓) YES ( ) NO ( ) N/A
Load Indicator System	Visual check on fittings and connections for leaks. Fix leak if any. Note:.....				OEM Manual	( ) YES ( ) NO
	Should any leaks exist, stop leak and recharge system, refer to maintenance manual				OEM Manual	(✓) YES ( ) NO
	Change and flushing Load cell fluid.				OEM Manual	(✓) YES ( ) NO
	Check general condition of tubbing, hoses, pins bolts, paint, etc.				Industry Standard	(✓) YES ( ) NO
	Insure load cell is free of obstructions				OEM Manual	(✓) YES ( ) NO
	Check condition of gauge(s) face and clean glass as required.				OEM Manual	(✓) YES ( ) NO
	Check the scale's operation and weighing accuracy. (Main Hoist) Remark : Maximum variance +/- 2% Note:.....				Company Spec/Standard	(✓) YES ( ) NO ( ) N/A
	Check the scale's operation and weighing accuracy. (Aux. Hoist) Remark : Maximum variance +/- 2% Note:.....				Company Spec/Standard	(✓) YES ( ) NO ( ) N/A
	Check the internal casting fluid of weight indicator. top up if required				Industry Standard	(✓) YES ( ) NO ( ) N/A
	Insure SWL tag matches ratings on the Crane Load Chart.				OEM Manual	(✓) YES ( ) NO ( ) N/A
	Insure Boom Length, matches the Crane Load Chart				OEM Manual	(✓) YES ( ) NO ( ) N/A
	Insure Boom Angle measurements and readings match the boom angle indicator.				OEM Manual	(✓) YES ( ) NO ( ) N/A
	Insure Boom Radius measurements indicate the distance from center line of the crane to the hook				OEM Manual	(✓) YES ( ) NO ( ) N/A
	Check Main load cell gap 1/4 (0.250) inch				OEM Manual	(✓) YES ( ) NO ( ) N/A
	Check Aux load cell gap 3/8(0.380) inch (Compression Load Cell Type)				OEM Manual	(✓) YES ( ) NO ( ) N/A

SYSTEM	TASK	Specification	Record/Reading
Pedestal & Structure	Visually check Pedestal for chipped/cracked paint, deformation, worn parts, dents, corroded areas, cracks weld, etc.	API RP 2D	(✓) YES ( ) NO
	Check water rain drain at pedestal must be not obstuct	Industry Standard	(✓) YES ( ) NO
	Check pin and cotter pin of pedestal missing , corrosion, wear, damage and exercise pin.	Industry Standard	(✓) YES ( ) NO
	Visually check Base - Plate connection and Base hoist Structure for chipped/cracked paint, deformation, worn parts, dents, corroded areas, cracks weld, etc.	API RP 2D	(✓) YES ( ) NO
	Check A fixed such as Handrial, Walkway, Grating, stationary structure without significant movement in response to waves and currents in normal operating conditions.	API RP 2C	(✓) YES ( ) NO
	Visually check and lubricate maintenance Jib. ***Note*** if on pedestal crane	OEM Manual	( ) YES ( ) NO (✓) N/A
	Check maintenance jib is secure firmly. ***Note*** If on pedestal crane	OEM Manual	( ) YES ( ) NO (✓) N/A
Box Boom & Luffing CYD	Check and Verify entire box boom and Boom CYD for loss of protective coating and corrosion. Note: ok	API RP 2D	(✓) YES ( ) NO
	Check and Verify entire box boom and Boom CYD for chipped/cracked paint, deformation, worn parts, dents, corroded areas, cracks, etc. Note: ok	API RP 2D	(✓) YES ( ) NO
	Check and Verify boom end connections, for bends, dents, corroded areas, cracked welds, and signs of mechanical damage, wear, etc. **any deviation should be reported**	API RP 2D	(✓) YES ( ) NO
	Check and Verify boom rest and wooden support to ensure it's in good condition	API RP 2D	(✓) YES ( ) NO
	Inspect pin and pin holes of Upper tank and Lower tank for excessive clearance	OEM Manual	(✓) YES ( ) NO
	BOOM CYLINDER PIN MAXIMUM TOLERANCE — 0.125 Inch (3mm)	Industry Standard	As found Visual
	Check BOOM CYLINDERS for proper operation and good condition	API RP 2D	(✓) YES ( ) NO
	Check Boom cylinder barrels and rods for leaks, mechanical damage and corrosion	Industry Standard	(✓) YES ( ) NO
	Check and measurement boom foot pin and connection pins for clearance	Industry Standard	
	BOOM FOOT PINS & BOOM BOX CONNECTER PIN TOLERANCE — 0.125 Inch (3mm)	Industry Standard	
	Boom Foot Pin Tolerance	Industry Standard	Visual inch
	Boom Box Connecter Pin Tolerance	Industry Standard	Visual. inch
	Check connecting bolts of box boom loose, corrosion, wear, damage	OEM Manual	(✓) YES ( ) NO
	Lubricate boom foot pins and bushings	OEM Manual	(✓) YES ( ) NO
	Lubricate boom cylinder pins, bearings and bushings	OEM Manual	(✓) YES ( ) NO
	Boom function test angle/radius to correction **Note; The cylinder(s) mechanism shall be capable of elevating the boom from a minimum of zero degrees to the maximum recommended boom angle.	API RP 2C	(✓) YES ( ) NO
	Operation functional test and verify Boom Creeping down **Note ; Test at angle 60 °	Industry Standard	(✓) YES ( ) NO As found ok
Wire Rope	Determine if parts-of-line match parts of line on the load chart in the crane cabin.	API RP 2D	(✓) YES ( ) NO
	Determine if visible portion of wire rope adequately lubricated. If not lubricate wire rope	API RP 2D	(✓) YES ( ) NO
	For each layer of wire rope on drum, check that all rope is parallel and each crossover point at hoist flanges is correct	API RP 2D	(✓) YES ( ) NO
	The top layer of rope must not be lower to the flange tips 2.5 in for Smooth drum,2 in for groove drum or 2.5 times of wire rope diameter	API RP 2C	(✓) YES ( ) NO
	Inspect wire rope for, kinking, crushing, broken wires, necking down of rope diameter, worn outside wires, corroded or broken wires at end connection, cutting or unstringing.	API RP 2D	(✓) YES ( ) NO As found ok
	NoteRunning Ropes of rotation-resistant construction used in the main or auxiliary Hoist: - Four (4) Randomly distributed broken wires within 30 rope diameter - Two (2) broken wires in one stand within 6 rope diameter	API RP2D Edition 7	(✓) YES ( ) NO As found ok
	One valley break can indicate internal rope damage requiring close inspection of this section of the rope. When one or more valley breaks are found in one lay length the rope should be retired.	API RP2D Edition 7	(✓) YES ( ) NO As found ok
	Reductions for the rope diameter, from initial wire rope dimensional measurements, in a nonworking area (an area away from the sheaves) compared to the lowest diameter of rope measured in three working areas (areas where the rope regularly goes over a sheave) of more than the following is observed: — 3/64 in. (0.047 in.) (1.2 mm) for diameters up to and including 3/4 in. (19.1 mm); — 1/16 in. (0.062 in.) (1.6 mm) for diameters of 7/8 in. to 1-1/8 in. (22.2 mm to 28.6 mm); — 3/32 in. (0.093 in.) (0.8 mm) for diameter of 1-1/4 in. to 1-1/2 in. (31.8 mm to 38.1 mm); — For rope diameters greater than 1-1/2 in., a 5 % diameter loss from baseline measurement. —Wear of one-third the original diameter of the outside individual wires.	API RP2D Edition 7	(✓) YES ( ) NO As found dimension ok
	Increase in the length of an individual rope lay is observed. This increase in lay length and accompanying reduction in diameter can be caused by failure of the core. This can occur more readily in ropes or rotation-resistant construction.	API RP2D Edition 7	(✓) YES ( ) NO As found ok
	-Inspection and Verify running and standing rope from heat effect **Note; Not more than 250°C -There is evidence of heat damage from any source (i.e. engine exhaust, flare towers, stress corrosion cracking, etc.). Heat can be generated by passing a rope over a frozen or non-turning sheave, contact with structural members of the crane, improperly grounded welding leads or lightning strikes	Industry Standard	(✓) YES ( ) NO As found ok
	With the boom at the highest possible angle and the main load block or overhaul ball at the water level, ensure there is a minimum of 5 wraps of wire-rope remaining on the drums. Note: (Thai law, requires minimum of 2 wraps)	API SPEC 2C / Thai Law	(✓) YES ( ) NO
	Reference: - Running rope safety factor not less than 6 for wire rope that are running wire, (Thai law; Wire rope nominal breaking strength x number parts of line / Design factor 6) - Standing rope safety factor not less than 3.5 for wire rope that are stay cables, (Thai law)	Thai Law	(✓) YES ( ) NO ( ) N/A
	Measure and record nominal diameter of "running ropes"main and auxiliary (particularly on drum, equalizer sheave and at sockets, clips and dead end points) *****Nominal = several measurements added together divided by Number of measurements*****	API RP 2D	(✓) YES ( ) NO
	Inspect wire rope and record dimension.	API RP 2D	
	MAIN WIRE ROPE OD: — FULL DRUM	OEM Manual	0.652 inch
	MAIN WIRE ROPE OD: — HALF DRUM	OEM Manual	0.650 inch
	MAIN WIRE ROPE OD: — WATER LEVEL	OEM Manual	0.652 inch
	AUX WIRE ROPE OD: — FULL DRUM	OEM Manual	0.649 inch
	AUX WIRE ROPE OD: — HALF DRUM	OEM Manual	0.647 inch
	AUX WIRE ROPE OD: — WATER LEVEL	OEM Manual	0.665 inch
	Slip-Cut 1 meter of all ropes at the wedge socket and re-wedge to prevent rust inside of wedge socket (at outward end of rope, not on hoist drum) Dead end tail length is never less than 6 inches, or: - Standard 6 to 8 Strand wire rope is not less than 7 times the rope diameter - Rotation Resistant Wire Rope is not less than 20 times the rope diameter	Company Spec/Standard	(✓) YES ( ) NO

SYSTEM	TASK	Specification	Record/Reading
	U-bolt and Fist Grip Clips: Extreme care should be exercised to assure proper orientation of U-bolt clips. The U-bolt segment shall be in contact with the wire rope dead-end. The orientation, spacing, torquing, and number of all clips shall be in accordance with the crane manufacture's specifications.	API SPEC 2C	( ) YES ( ) NO
	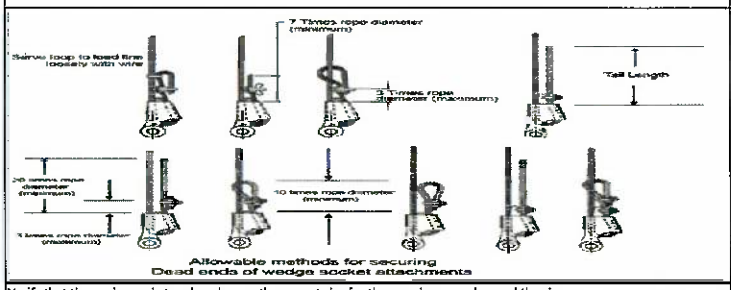 Allowable methods for securing Dead ends of wedge socket attachments	API SPEC 2C	Model ans Size wedge socket. Main hoist. Model 9.5 x 64 Size 5/8 Aux.Hoist. Model 9.5 x 64 Size 5/8
	Verify that the wedge socket and wedge are the correct size for the rope in use and record the size	API SPEC 2C	(✓) YES ( ) NO
Sheaves & Bearings	Lubricate all sheave bearings.	API RP 2D	(✓) YES ( ) NO
	Visually inspect all sheaves and bushings for cracks, wear and deterioration	API RP 2D	(✓) YES ( ) NO As found Good
	Visually inspect wire rope track of sheave for rope imprints, wear and deterioration. If damage exist sheave should be resurfaced or replaced.	API RP 2D	(✓) YES ( ) NO As found Good
	Pins retained by snap rings, bolt lock shafts, plates lock should be checked for missing or loose for all	API RP 2D	(✓) YES ( ) NO
	Check wirerope guards and keepers for proper location and condition.	API RP 2D	(✓) YES ( ) NO
	Determine if wire rope is jumping the sheaves, by looking for signs of damage on the sheave brim	Industry Standard	(✓) YES ( ) NO
	Sheave Rope Profile for optimum Rope life the sheave groove profile should be correctly matched to the rope diameter	Industry Standard	(✓) YES ( ) NO
	Check rope sheave should be machine grooved to adepth of not less than 1.5 times the norminal diameter of the rope	Industry Standard	(✓) YES ( ) NO
	MAIN POINT SHEAVES: Note; OK	Industry Standard	No.1 (✓) YES ( ) NO No.2 (✓) YES ( ) NO
	AUX SHEAVES: Note; OK	Industry Standard	No.1 (✓) YES ( ) NO
	IDLER SHEAVES: Note; OK	Industry Standard	AUX. (✓) YES ( ) NO Main (✓) YES ( ) NO
	Pins for bronze bushing and straight roller bearing should have a running clearnace of .031 inch/ sheave of end play and should be adjusted accordingly.(count from left)	Industry Standard	( ) YES ( ) NO
	MAIN POINT SHEAVES:	Industry Standard	Sheave No.1 18 inch Sheave No.2 18 inch
	AUX SHEAVES:	Industry Standard	Sheave No.1 18 inch
	IDLER SHEAVES:	Industry Standard	Sheave AUX 18 inch. Sheave Main 18 inch.
	Ensure the sheaves are aligned and the fleet angle is correct **Remark ; Wire rope User's Manual allows 2 degree on grooved winch drum, Smooth Drum shuold be not more than 1-1/2 degree	API RP 2D	(✓) YES ( ) NO
	Determine if wire rope size and sheave sizes/grooves are compatible and record size. Sheave pitch diameter (D) to nominal wire rope diameter (d) ratio (D/d) shall not be less than 18:1	API SPEC 2C	(✓) YES ( ) NO
	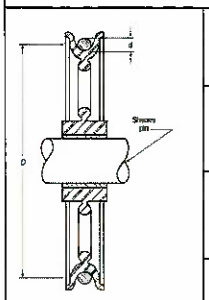 MAIN POINT SHEAVES: SHEAVE D / WIRE ROPE d = >18	API SPEC 2C	18 inch (D) 0.625 inch (d) 25 (Ratio D/d)
	AUX SHEAVES: SHEAVE D / WIRE ROPE d = >18	API SPEC 2C	18 inch (D) 0.625 inch (d) 25 (Ratio D/d)
	IDLER SHEAVES: SHEAVE D / WIRE ROPE d = > 18 (If applicable)	API SPEC 2C	18 inch (D) 0.625 inch (d) 25 (Ratio D/d)
	MAIN BLOCK SHEAVES: SHEAVE D / WIRE ROPE d = > 16	API SPEC 2C	16 inch (D) 0.625 inch (d) 25 (Ratio D/d)
Load Block	Load Block: Check the load block for cleanliness, binding sheaves, damaged or worn sheaves, worn or distorted sheave pins, broken bolts, and worn cheek weights. Note ; OK	Industry Standard	(✓) YES ( ) NO As found good
	Hook: Check the hook damage, excessive wear to the hook safety latch, hook swivel trunnions, thrust collar, securing, damage or missing lubrication fittings, proper lubrication, cracks and gouges, and if visibly bent or twisted or has been exposed to welding or arching Note ; OK	Industry Standard	(✓) YES ( ) NO As found good
	Hook: Tip has been bent more than 10 degree out of plane from the hook body	Industry Standard/API RP2D7	(✓) YES ( ) NO As found good
	Inspect the Pins for bronze bushing and straight roller bearing should have a running clearnace of .031 inch/ sheave of end play and should be adjusted accordingly	Industry Standard	(✓) YES ( ) NO
	Inspect Hook or shackle to swivel case clearance is set at .031 to .062 inch, Clearance exceeding .12 to .18 (ONLY CROSBY BRAND)	OEM Crosby	(✓) YES ( ) NO
	OEM STANDARD RECOMMEND that Crane block removal from service untill replaced and repair following below	OEM STANDARD	

SYSTEM	TASK	Specification	Record/Reading
	- Elongated center pin and hook trunnion holes exceeding 5% of Original diameter	OEM STANDARD	(✓) YES ( ) NO As found ok
	-Material loss due to wear exceeding 10% of original section	OEM STANDARD	(✓) YES ( ) NO As found ok
	-Sheave wire rop groove diameter smaller than 2.5%	OEM STANDARD	(✓) YES ( ) NO As found ok
	Loosened tie bolts nuts, center pin round nuts, check weight cap screws and hook nut cap screws. Tie bolt nuts to be torqued to 35-40 ft.Lbs and restaked, all other fasteners wrench tight	OEM STANDARD	(✓) YES ( ) NO
	Throat opening - any distortion causeing an increase in throat opening of 5% not ot exceed 1/4 in. (6 mm.)(or as recommended by the manufacturer)	ASME B30.10	(✓) YES ( ) NO
	Inspect rope track worn in sheave groove, sheave must be resurface or replace	API RP 2D	(✓) YES ( ) NO
	Ensure the load block is not using "Cast Iron" cheek weights they can not be used as per API	API SPEC 2C	(✓) YES ( ) NO As found ok
	Determine if all hooks are equipped with properly operating safety latches and check for proper functioning	API RP 2D	(✓) YES ( ) NO
	Lubricate sheave bearings and swivels	OEM Manual	(✓) YES ( ) NO
	Re-thighten nut firmly to point at which trunion will just rotate, the Re-tighten set-screw in nut and thread condition as in the picture below,	Industry Standard	(✓) YES ( ) NO
	Last NDE inspection record	Industry Standard	Last inspect date
	RECORD LOAD BLOCK INFORMATION : Manufacturer:	OEM Manual	McKISSICK
	Model:	OEM Manual	M260D14
	Serial Number:	OEM Manual	0396138
	Record Load block measurements and details for future comparison with historical data	Industry Standard	(✓) YES ( ) NO
	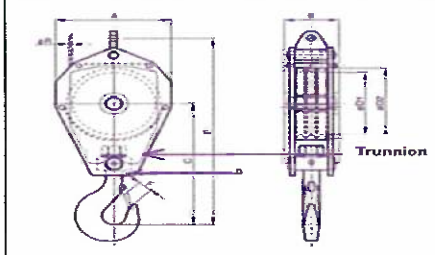 A - Block OD	Industry Standard	19.5 mm/ inch
	B - Block length	Industry Standard	14 mm/ inch
	C - Center of Pin to hook Saddle	Industry Standard	25 mm/ inch
	D1 - Sheave Diameter	Industry Standard	16 mm/ inch
	E - Block Width	Industry Standard	52 mm/ inch
	F - Throat Opening	Industry Standard	47 1/8 mm/ inch
	G - Trunnion	Industry Standard	0.09 mm/ inch
Aux. Ball	Inspect Auxiliary ball for cleanliness, binding swivel, work pad-eye hole. Inspect the hook damage, excessive wear to the hook safety latch, Bent connector plates,Severe corrosion pitting, hook swivel trunnions, thrust collar, securing, damage or missing lubrication fittings,Loose, missing or damaged retaining nuts, cotter pins or swivel set screws ,Missing or illegible rating and warning tags, proper lubrication, cracks and gouges, and if visibly bent or twisted or has been exposed to welding or arching.	Industry Standard	(✓) YES ( ) NO
	Hook: Tip has been bent more than 10 degree out of plane from the hook body	Industry Standard/API RP2D7	(✓) YES ( ) NO
	OEM STANDARD recommend that Crane overhaul ball removal from service untill replaced and repair following below	OEM STANDARD	
	- Elongated ball pin holes, hook latch pin holes and swivel eye exceeding 5% of original diameter,	OEM STANDARD	(✓) YES ( ) NO As found ok
	-Swivel end play gap exceeding .08". Excessive end play indicates damaged internal set screw	OEM STANDARD	(✓) YES ( ) NO As found ok
	-Material loss due to wear exceeding 10% of original section	OEM STANDARD	(✓) YES ( ) NO As found ok
	Throat opening - any distortion causeing an increase in throat opening of 5% not ot exceed 1/4 in. (6 mm.)(or as recommended by the manufacturer)	ASME B30.10	(✓) YES ( ) NO
	All hooks that lift personnel are to have a positive locking safety latch **locking Pin to be used while lifting personnel**	API RP 2D	(✓) YES ( ) NO
	*** Temperature Effected : When hooks are to be used at temperature above 400° F. (204°C) or below -40°F (-40°C), the hook manufacturer or a qualified person should be consulted *** Chemically Active Environment : The strength of hooks can be affected by chemically active environments, such as caustic or acid substances or fumes. The hook manufacturer or qualified person should be consulted before hooks are used in chemically active environment	ASME B30.10	
	Verify to ensure nut firmly at which trunion rotate. Identify to set-screw in nut/ swivel/ counter pin and thread condition.	Industry Standard	(✓) YES ( ) NO
	Last NDE inspection record	Industry Standard	Last inspect date
	RECORD AUX BALL INFORMATION : Manufacturer:	OEM Manual	McKISSICK
	Model:	OEM Manual	MBW 500E
	Serial Number:	OEM Manual	8071438
	Record Auxiliary Ball measurements and details for future comparison with historical data: For Model M807T200E ONLY	Industry Standard	
	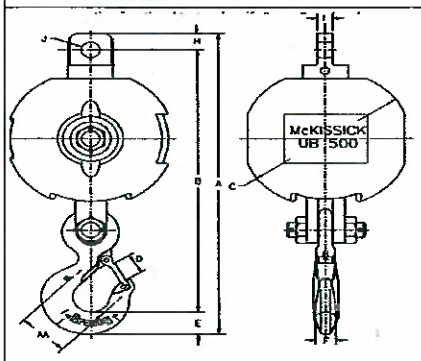 AA Dimensions 3.0 Inch	Industry Standard	40 mm/ inch
	A Dimensions 24.89 Inch	Industry Standard	243 mm/ inch
	B Dimensions 21.71 Inch	Industry Standard	218 mm/ inch
	C Dimensions 12.50 Inch	Industry Standard	120 mm/ inch
	D Dimensions 1.61 Inch	Industry Standard	20 mm/ inch
	E Dimensions 1.81 Inch	Industry Standard	28 mm/ inch
	F Dimensions 1.38 Inch	Industry Standard	2 1/8 mm/ inch
	H Dimensions 1.38 Inch	Industry Standard	1.85 mm/ inch
	I Dimensions 0.88 Inch	Industry Standard	0.8 mm/ inch
	J Dimensions 1.31 Inch	Industry Standard	2.3 mm/ inch
Safety system	Check Condition anti - two block , hanging chain ,eye bolts , fix bolts , shackle for missing , corrosion , erosion , deformation	API RP 2D	(✓) YES ( ) NO

SYSTEM	TASK	Specification	Record/Reading
	Check anti - two block kick out plate for freely movement	Company Spec/Standard	(✓) YES ( ) NO
	Check anti-2-block device proper function of Main winch	Company Spec/Standard	(✓) Function ( ) False
	Check anti-2-block device proper function of Aux. winch	Company Spec/Standard	(✓) Function ( ) False
	Check relation of boom radius and boom angle (lowest, middle, highest) with refrence to load chart. Recharge fluid W-15 to load indicator, if required.	API RP 2D	(✓) YES ( ) NO
	Functional test of emergency lowering system (See procedure in Emergency Load Lowering Box). **Note:** Keep for 1 Yr PM to sustain crane mechanic competency. **Caution:** Function test must be performed on top deck with max 2-foot height.	Company Spec/Standard	(✓) YES ( ) NO ( ) N/A
	Visually check emergency load lowering kit. Ensure EMERGENCY LOWERING PROCEDURE and MATERIAL LIST are in the box. - Ensure ALL items shown on the list are in the box and in good condition - SECURE THE BOX WITH A TIE WRAP.	Company Spec/Standard	(✓) YES ( ) NO ( ) N/A
Slew Mechanism	Visually check for damage and excessive wear on gear teeth	OEM Manual	(✓) YES ( ) NO
	Visually check slew gear box in the area of oil seal for any leaks	API RP 2D	(✓) YES ( ) NO
	RECORD SLEW GEAR BOX INFORMATION : Manufacturer:	OEM Manual	
	RECORD SLEW GEAR BOX INFORMATION : Model:	OEM Manual	250BDIC4-51
	RECORD SLEW GEAR BOX INFORMATION : Serial Number:	OEM Manual	83095
	CHECK and RE-TORQUE swing drive gearbox mounting bolts at following brands: - ESKRIDGE, Model: 250 = 150 FT-LBS	API RP 2D	(✓) Yes ( ) No
	Check swing gearbox oil level/condition, top up if required	OEM Manual	(✓) YES ( ) NO
	Monitor slew gearbox oil condition by visually examine for burnt smell, metal particles, and/or other contaminants, record and change if found. — Meropa 220	OEM Manual	(✓) CHANGE OIL ( ) NOT CHANGE OIL
	Change slew gear box oil — Meropa 220	OEM Manual	(✓) CHANGE OIL ( ) NOT CHANGE OIL
	Grease all pivot points of slew ring (bearing)	OEM Manual	(✓) YES ( ) NO
	Grease open gears (pinion)	OEM Manual	(✓) YES ( ) NO
	Rotate crane 360 degree and check smoothness of operation	OEM Manual	(✓) YES ( ) NO
	Check swing drive static parking brake for proper operation Caution: DO NOT stop the swing of the crane with this static brake (parking brake)	OEM Manual	(✓) YES ( ) NO
	Check swing drive dynamic parking brake for proper operation	OEM Manual	(✓) YES ( ) NO
	Check swing lock mechanism condition, corrosion ,dent , loos all part,worn and wear	OEM Manual	(✓) YES ( ) NO As found condition: ok
	Check swing lock mechanism freely lock and unlock for function. **Check and inspect for hydraulic for leaks on actuator model.**	OEM Manual	(✓) YES ( ) NO As found condition: ok
	Check condition of slew ring bolts e.g. Bolt grade and washers. Caution: Use only hardened flat washers under head of bolt. Do not use lock washers, or regular flat washers.	Industry Standard	(✓) YES ( ) NO As found condition: ok
	Monitor ball-ring grease sample. If found wear and tear particles, take sample and send to lab. **Wear assessment by grease sample analysis—wear may be monitored by periodic grease sample analysis as describe in this section. Grease samples should be collected every twelve months as a minimum and the results of the analysis recorded; this period should be shortened if obvious metal or contaminants are present.	API RP 2D	( ) SEND TO LAB (✓) NOT SEND TO LAB As found: ok
	Verify crane condition and load test as separate procedure. **Table 1—Static/Onboard Test Load and Radius** Static/Onboard Rated Load at a Specific Radius lb (kg) — Test Loads In Excess of Static/Onboard Rated Load at a Specific Radius ≤ 40,000 (18,144) — 25 % > 40,000 ≤ 100,000 (>18,144 ≤ 45,356) — 10,000 lb (4536 kg) > 100,000 (45,356) — 10 %	API 2C	(✓) YES ( ) NO Specific test load: 29,401 lbs.
	Verify crane condition and load test as separate procedure. " Record crane load test in load test form."	Company Standard	(✓) YES ( ) NO

Risk Level Definitions: The following 3 levels indicate the impact the noted deficiency poses to the operation or structural integrity of the equipment:

Level 1 = Incidental	Level #2 = Restricted Operation	Level #3 =Out of Service
Minor deficiency that is recommended to be promptly addressed, but poses no safety and/or environmental risk. The crane can still be operated at full duty.	Deficiency identified that has the potential to limit, de-rate or damage the crane, its surroundings and/or the environment. The duty and locked/ tagged out until the crane's duty and operation should be de-rated or service restricted.	The crane should be removed from duty and locked/ tagged out until the deficiency is rectified.

System:	Risk Level:	Component: / Location:	accumulator / Power motor	In Accordance with: / Date Originated:	
Description:	Nitrogen pressure in accumulator was low 1000 psi.				
Recommended Action:	Need to re-PM.				
Recommended urgency timeframe for corrective action:		Completed Date:		Completed By:	

System:	Risk Level:	Component: / Location:	Mirror. / Cabin.	In Accordance with: / Date Originated:	
Description:	- Cracked mirror at front side (DISCONNECTED) / Deteriorated acrylic at top side (Cracked)				
Recommended Action:	Need to replace.				
Recommended urgency timeframe for corrective action:		Completed Date:		Completed By:	

System:	Risk Level:	Component:		In Accordance with:	

SYSTEM		TASK		Specification		Record/Reading
	Location:			Date Originated:		
Description:						
Recommended Action:						
Recommended urgency timeframe for corrective action:			Completed Date:		Completed By:	

System:	Risk Level:	Component:		In Accordance with:		
		Location:		Date Originated:		
Description:						
Recommended Action:						
Recommended urgency timeframe for corrective action:			Completed Date:		Completed By:	

System:	Risk Level:	Component:		In Accordance with:		
		Location:		Date Originated:		
Description:						
Recommended Action:						
Recommended urgency timeframe for corrective action:			Completed Date:		Completed By:	

System:	Risk Level:	Component:		In Accordance with:		
		Location:		Date Originated:		
Description:						
Recommended Action:						
Recommended urgency timeframe for corrective action:			Completed Date:		Completed By:	

Done By

[redacted]

1 Jan 25

BEWU

LOAD TEST RECORDING

☒ MAIN LOAD BLOCK ; 4 PART OF LINE ☒ WHIP / AUX. BLOCK ; 1 PART OF LINE. ☒ STATIC LOAD TEST. ☒ DYNAMLC LOAD TEST.

CRANE LOCATION. BEWU CRANE MANUFACTURER. NAUTILUS MODEL : 180B1-80MS SERIAL NUMBER. BOOM LENGTH. : 80 FEET	MAXIMUM RADIUS @ 13 FT . RADIUS. ANGLE 81 DEGREE SWL = 32,019 LBS., = 14.5 TONNES.			INTERMEDIATE RADIUS SWL =			MINIMUM RADIUS SWL =		
	MEDIUM LOAD 60-70 % of SWL	SAFTY WORKING LOAD Static load test @ 100% of SWL	OVER LOAD 125-133 % of SWL. (If N/A,Use 115 %)	MEDIUM LOAD 60-70 % of SWL	SAFTY WORKING LOAD 100 % of SWL.	OVER LOAD 125-133 % of SWL. (If N/A,Use 115 %)	MEDIUM LOAD 60-70 % of SWL	SAFTY WORKING LOAD 100 % of SWL.	OVER LOAD 125-133 % of SWL. (If N/A,Use 115 %)
TEST WEIGHT MANUFACTURER : Beam Clamp Grosby CAPACITY: 25 TONNES. AMOUNT : 25 Tons.	%of SWL = LBS. = TONNES.	99 %of SWL = 299,970 LBS. = 13.6 TONNES.	%of SWL = LBS. = TONNES.	%of SWL = LBS. = TONNES.	%of SWL = LBS. = TONNES.	%of SWL = LBS. = TONNES.	%of SWL = LBS. = TONNES.	%of SWL = LBS. = TONNES.	%of SWL = LBS. = TONNES.
A) HOIST UP TO BOOM POINT.		N/A							
B) HOIST TO LOWER.		N/A							
C) HYDRAULIC PRESSURE HOISTING. UP		2800 PSI							
D) SWING 360 TO THE RIGHT.		N/A							
E) SWING 360 TO THE LEFT.		N/A							
F) HYDRAULIC PRESSURE SWINGING.		N/A							
G) INDICATED LOAD.		OK							
H) 10 MINUTES HOLD WITH ENGINE SHUTDOWN.		OK.							

BOOM WIRE ROPE :	N/A	TEST CONDUCTED BY : [redacted]	POSITION : CRANE MECHANIC
MAIN WIRE ROPE :	5/8" DYF 18 HSLR	OWNER REP : [redacted]	POSITION : CRANE MECHANIC
AUX. WIRE ROPE :	5/8 DYF 18 HSLR	CERTIFYING INSPECTION : [redacted]	COMPANY / POSITION : ENERFLEX / CRANE MECH
TEST WEIGHT :	13.6 TONNES.	DYNAMOMETER CALIBRATED BY : [redacted]	CERT. NO. : LC24053
TEST CELL :	BRIDON S/N BLM 2945	CRANE OPERTOR : [redacted]	DATE : 30 JAN 2025

CRANE Mfg. : Nautilus
MODEL: 200B-50
SERIAL NUMBER :

LOCATION: BEWD

DATA BASE - PM JOB TASK CARD
WO:1244145

Crew Size: 4
Estimated Hours: 1322

SYSTEM	TASK		Specification	Record/Reading
Safety	Perform Job Safety Analysis (JSA)		Company Spec/Standard	(✓) YES ( ) NO
	Obtain "COMPANY" PERMIT TO WORK		Company Spec/Standard	(✓) YES ( ) NO
	Perform Tool Box Talk		Company Spec/Standard	(✓) YES ( ) NO
	BEFORE/AFTER JOB EXECUTION: Ensure to comply with isolation procedure (LOCK OUT/TAG OUT, WARNING SIGNS and BARRIERS).		Company Spec/Standard	(✓) YES ( ) NO
Required Tools	Insure proper tools are available at the job site		Company Spec/Standard	(✓) YES ( ) NO
	Tool bag		Company Spec/Standard	(✓) YES ( ) NO
	Tool box		Company Spec/Standard	(✓) YES ( ) NO
	Tool Container		Company Spec/Standard	(✓) YES ( ) NO
	MPI equipment and operator		Company Spec/Standard	(✓) YES ( ) NO
	Check safety harness Software and Hardware should be good condition before use		Company Spec/Standard	(✓) YES ( ) NO
	Check Rescue Equipment ready to use onsite		Company Spec/Standard	(✓) YES ( ) NO
	Portable Scaffolding and Crew if require		Company Spec/Standard	(✓) YES ( ) NO
Lubricants	Insure proper lubricants and consumables are available at the job site.		Company Spec/Standard	(✓) YES ( ) NO
	Hydraulic System - Hydraulic Oil	Rando HD-68	OEM Manual	(✓) YES ( ) NO
	Slew Gearbox - Gear Oil	Meropa 220	OEM Manual	(✓) YES ( ) NO
	Auxiliary Hoist - Gear Oil	Meropa 220	OEM Manual	(✓) YES ( ) NO
	Main Hoist - Gear Oil	Meropa 220	OEM Manual	(✓) YES ( ) NO
	Grease Points - Lithium Based **IT MUST NOT INCLUDE MOLYBDENUM DISULPHIDE**	MULTIFAK EP#2	OEM Manual	(✓) YES ( ) NO
	Open Gear Teeth - Open Gear Lube highly water resistant and of an adhesive nature.	OMEGA 73	OEM Manual	(✓) YES ( ) NO
	Pneumatic Lubricator	SAE Grade 10	OEM Manual	(✓) YES ( ) NO
	Wire rope Lubricant Company preferred grade	Birlube 70	OEM Manual	(✓) YES ( ) NO
	Engine Oil - SAE Grade 15W-40 (Delo Gold)	15W-40	OEM Manual	(✓) YES ( ) NO
	Safe Load Indicator fluid	W-15	OEM Manual	(✓) YES ( ) NO
	Engine Radiator - Should have radiator preservatives additives	Cat® SCA	OEM Manual	(✓) YES ( ) NO
Consumables	Spray Cold Galvanize		Company Spec/Standard	(✓) YES ( ) NO
	Denso Tape		Company Spec/Standard	(✓) YES ( ) NO
	WD-40		Company Spec/Standard	(✓) YES ( ) NO
History Review	Before starting work, tasks preparation at least 1 day prior to starting work: 1. Review history PM/ CM from Roving Team, 2. Review last PM/ CM/ PMI from Crane Mech, 3. List out all punch list and prepare parts. 4. Review last Certificate task performed		API RP 2D	(✓) YES ( ) NO
	Require to update part history from Crane Mech on following main compenents to ensure the right parts are prepared: - Aux/ Main/ Boom Cylinder, Engine, Swing Gearbox, etc. Reference: Crane OEM information of each part need to be recorded - Manufacturer & Contact info - Model & serial number - Installation date		Company Spec/Standard	(✓) YES ( ) NO
	Review history data from Certificates and incorporate into current PM: - Pull Test Certificates (ongoing update, 4 yr. history). - Load Test Certificates (ongoing update, 4 yr. history). - Wire Rope Certifications (running rope and standing rope) (life of rope). - Hoist Certifications for hoist classified as "personnel handling" hoist.		API RP 2D	(✓) YES ( ) NO
	Review last Preventative Maintenance Records (Inspection Reports) - Pre-use (Pre-Post Inspection) - 6 Monthly (API RP 2D Not Defined, Company Standard) - 1 Yearly (API RP 2D Defined Annual Inspection)		API RP 2D	(✓) YES ( ) NO
Lifting Gear Preparation	Visually Inspect (Sling, sling hooks and shackles) include Webbsling / Chain		Company Spec/Standard	(✓) YES ( ) NO
	Check color code / Tag & date inspection		Company Spec/Standard	(✓) YES ( ) NO
General	Determine if access route to-from crane is clean, safe, unobstructed and adequately protected against falls, tripping and slipping		Company Spec/Standard	(✓) YES ( ) NO
	Check drain lines and drip pans for deterioration		API RP 2D	(✓) YES ( ) NO
	Remove any sediment collected in the bottom of drip pans		Industry Standard	(✓) YES ( ) NO
	Check for general crane and components for loss of protective coating and corrosion		Industry Standard	(✓) YES ( ) NO
	Check for missing or loose ,corrosion, deformation pins, pin keepers, bolts, nuts, fasteners of all laders, cages and working platform		API RP 2D	(✓) YES ( ) NO
	Apply grease to exposed grease parts (control valve spools, ball-ring gear, parking brake valve, etc.)		OEM Manual	(✓) YES ( ) NO
Prime Mover	Engine Caterpillar		OEM Manual	(✓) YES ( ) NO
	CATERPILLAR MODEL 3304 DI	S/N.:	OEM Manual	10B05180
		AR.No.:	OEM Manual	1W 3371
	Change engine lube oil & oil filter and check the condition of old oil. As found ;		OEM Manual	(✓) YES ( ) NO
	Check diesel tank level, top up if required.		OEM Manual	(✓) YES ( ) NO
	Check / Clean crankcase breather cap. Change if required		OEM Manual	(✓) YES ( ) NO
	Check / Clean air cleaner filter, Replace if require. (Note : Include inspect air cleaner housing)		OEM Manual	(✓) YES ( ) NO
	Check condition and inspect of the radiator and cap.		OEM Manual	(✓) YES ( ) NO
	Check for any signs of leaks on or around the engine ie; Crankshaft seal for front & rear seal , Engine oil cooler. As found;		OEM Manual	(✓) YES ( ) NO
	Check condition exhaust system for leaks, corrosion, insulation and general. As found ;		OEM Manual	(✓) YES ( ) NO
	Check condition of all engie hoses and tube. (Fuel supply,Cooling system and Lube oil system. As found;		OEM Manual	(✓) YES ( ) NO
	Drain water and sediment form diesel tank. As found ;		OEM Manual	(✓) YES ( ) NO
	Check / Clean Diesel tank level sightglass and diesel tag.		OEM Manual	(✓) YES ( ) NO
	Apply grease of fan bearing/shaft.		OEM Manual	(✓) YES ( ) NO
	Check and inspect the vibration damper and pulley. As found ;		OEM Manual	(✓) YES ( ) NO
	Change water coolant and check condition base of water coolant and record PH.		OEM Manual	(✓) YES ( ) NO
	COOLANT PARAMETERS (PH):	6 or higher	OEM Manual	PH =
	HOUR METER PARAMETERS:	LAST READING 1317 HRS	OEM Manual	1322 HRS
	Check and retigthen the bolts of all engine base. / Inspection mouting rubber. As found ;		OEM Manual	(✓) YES ( ) NO

[redacted] / 27 Jan 25

SYSTEM	TASK	Specification	Record/Reading
	Inspect the engine fan blades that there is a break is it severely distorted or rusted. As found ;.....	OEM Manual	(✓) YES ( ) NO
	Change and adjust the tension engine belts. Remark; To check belt Tension, after has engine run more than 30 minules apply 400 N (90 lbs) of force midway between the pulleys. Correctly adjusted belts with deflect 13 to 19 mm (1/2 to 3/4 inch).	OEM Manual	(✓) YES ( ) NO
	Check engine HYD starter drive gear bendix and fly wheel gear teeth condition and record. **Replace if required"	OEM Manual	(✓) YES ( ) NO Bendix Gear : 90 % Fly wheel Gear teeth : 90 %
	Check and inspect condition the Bendix of hydraulic Starter motor.	OEM Manual	(✓) YES ( ) NO
	Lubricate and check engine throttle system.	OEM Manual	(✓) YES ( ) NO
	Determine if the tachometer operates properly: Record Value of Idle & Max Speed (RPMs) Note: Too low Idle (RPMS) will cause excessive worn at winch brake	OEM Manual	
	ENGINE RPM SPECIFIC — IDLE SPEED 850-950 RPM	OEM Manual	850 RPM
	ENGINE RPM SPECIFIC — MAX SPEED 2200 RPM	OEM Manual	2200 RPM
	Confirm engine oil pressure as per Parameters below and Record Value:	OEM Manual	
	ENGINE OIL PRESSURE SPECIFIC — Minimum Not lower then 30 PSI	OEM Manual	30 PSI
	ENGINE OIL PRESSURE SPECIFIC — Maximum 70 PSI	OEM Manual	60 PSI
	Confirm engine fuel pressure Parameters are correct and Record Value:	OEM Manual	
	ENGINE FUEL PRESSURE SPECIFIC** — Normal Green Range / 15 psi **Note;Fuel pressure at high idle is lower than 105 kPa (15 psi)RAMETERS	OEM Manual	(✓) YES ( ) NO
	Confirm engine temperature Parameters and Record Value:	OEM Manual	
	ENGINE WATER TEMP SPECIFIC — NORMAL 120 - 180 degrees F	OEM Manual	110 F
	Test engine SAFETY DEVICE- ensure engine kill cable shuts off FUEL supply	API RP 2D	(✓) Function ( ) False
	Test engine SAFETY DEVICE- ensure EMERGENCY KILL CABLE - shuts off AIR supply	API RP 2D	(✓) Function ( ) False
	Test engine SAFETY DEVICE- ensure ENGINE low lube oil - releases OIL PRESSURE to ctivate Alarm Air System ***Note*** Engine oil pressure low alarm at 20 PSI	Company Spec/Standard	(✓) Function ( ) False
	Test engine SAFETY DEVICE- ensure HIGH TEMP - releases OIL PRESSURE to activate Alarm Air System	Company Spec/Standard	(✓) Function ( ) False
	Change water separator filter.	OEM Manual	(✓) YES (✓) NO
	Check the general conditionand functioning of turbocharger. Note;	OEM Manual	( ) Leak (✓) Not Leak
	Change fuel filter and inspect the primary hand pump.	OEM Manual	(✓) YES ( ) NO
	Check water temperator regulator.(Thermostat). Change if require refer from cooling temperature.	OEM Manual	(✓) YES ( ) NO
	Check general condition the Governor and control linkage. (Inspect the throtle linkage)	OEM Manual	(✓) YES ( ) NO
	Check or adjust the engine valve lash. (Intake vale = 0.015", Exhaust valve = 0.025")	OEM Manual	(✓) YES ( ) NO
	Check condition wear of pump drive spline and record **Note; Remaining 70% of Original Spline Surface must be replace.	Company Spec/Standard	90 % Remaining
	Check condition wear of adaptor Coulping spline shaft and record **Note; Remaining 70% of Original adaptor Coulping spline shaft Surface must be replace.	Company Spec/Standard	90 % Remaining
	Check condition wear of Coulping spline and record. Re-tigthen of all lock bolts. **Note; Remaining 70% of Original adaptor Coulping spline shaft Surface must be replace.	Company Spec/Standard	90 % Remaining
Hydraulic Start System (Apply for C2-Remote P/F Only)	Check pressure system at the pressure gauge which should reach 3,000 PSI as standard when the system is FULLY charged. Record Value. (As the system cools down, the pressure should drop slightly and finally stabilised.)	OEM Manual	(✓) YES ( ) NO
	Visually inspect all hydraulic connections and hoses for leaks and retighten if necessary. (Caution: This should NOT be done if the system is under pressure.) 1. Slowly release system pressure by loosening the bleed screw on top of the hand pump. 2. Ensure no pressure remains, retighten the suspected leak fitting or replace the damaged hose or component. 3. Retighten the bleed screw on the hand pump. 4. Pump the system up to 2200 - 2600 PSI 5. Inspect that the leak was eliminated.	OEM Manual	(✓) YES ( ) NO
	Function check Accumulator Pre-charge. (Caution: This should NOT be done if the system is under pressure.) 1. Shut the engine off, release system pressure via the bleed screw on top of the hand pump 2. Retighten bleed screw and actuate the hand pump. The pressure will rapidly increase and then stabilised. This pressure is related to accumulator gas pre-charge pressure. 4. if the pressure rapidly increase to 3000 PSI, it indicates that the accumulator has lost its gas charge. 5. Troubleshoot as necessary	OEM Manual	(✓) YES ( ) NO
	Check function rechaging system by function boom down while the engine running. 1. The crane engine is running at 1,000-1500 RPM. 2. Slowly control lever boom function down for charging pressure to accumulator. 3. This pressure should read on prssure gauge between 2200 - 2600 PSI depending on the recharge ratio 80% std. (90% optional). Record Pressure Value.	OEM Manual	2500 PSI
	Check Nitrogen pressure in Accumulator ***Note**spec @ 1,500 psi as follow schematic and if found pressure loss below 1400 PSI then prepare recharge nitrogen in system	OEM Manual	1500 PSI
	Every 36 months or 2000 engine running hours (approximately 1500 starts) replace the high pressure filter.	OEM Manual	(✓) YES ( ) NO
Pneumatic System	Check for noisy compressor operation, which could indicate a worn drive gear coupling, a loose pulley or excessive internal wear	OEM Manual	(✓) YES ( ) NO
	Check Air Compressor external oil supply and return lines, if applicable, for kinks, bends, or restrictionsto flow	OEM Manual	(✓) YES ( ) NO
	Inspect the Air compressor discharge port, inlet cavity and discharge line for evidence of restrictions and carboning. (If excessive buildup is noted)	OEM Manual	(✓) YES ( ) NO
	Check all hose connections are sound and all mounting and pivoting connections are secure.	OEM Manual	(✓) YES ( ) NO
	Check condition / Clean and lubricate unloading valve	OEM Manual	(✓) YES ( ) NO
	Check proper air pressure is available for the system. Record Value.	OEM Manual	
	AIR SYSTEM PARAMETERS: MAX 60 PSI	OEM Manual	N/A PSI
	Visually inspection condition of air receiver for signs of corrosion or loose of structural integrity.	Industry Standard	(✓) YES ( ) NO
	Check the hose, piping and tubing for mechanical damage, corrosion, splits, blisters, cracking or excessive abrasion on the outer surface	Industry Standard	(✓) YES ( ) NO
	Drain off air filter and reciever to remove condensed water. If water is present, drain until water is removed.	Industry Standard	(✓) YES ( ) NO
	Check proper operation of pop off valve, by manually functioning valve.	Industry Standard	(✓) YES ( ) NO
	Check proper operation of manual latch valve, by manually functioning latch.	Industry Standard	(✓) YES ( ) NO
	Check proper operation of small engine alarm horn.	Industry Standard	(✓) YES ( ) NO
Hoist / Brakes	Visually check a hoist exhibits erratic operation and/or unusual noise, the hoist must be taken out of service until it is inspected and serviced by a qualified technician. Continued operation of a hoist with a defect in a critical component may lead to loss of load control, property damage, serious injury or death.	OEM Manual	(✓) YES ( ) NO
	Visual exteriors of hoist, frames, drums and flanges for damage, leaks, cracks and wear and repair/replace as required to maintain the structural integrity of the hoist.	OEM Manual	(✓) YES ( ) NO

[redacted] / 29 Jan 25

SYSTEM	TASK			Specification	Record/Reading
	Check all hoist mounting pins, bolts or other fasteners and replace or tighten as necessary.			OEM Manual	( )YES ( ) NO
	Lubricant level must be maintained between the minimum and maximum levels; midway up sight glass or at bottom of level plug port as equipped and check/clean plug vent. Use only the recommended type of lubricant.			OEM Manual	( )YES ( ) NO
	Inspect Brake Valve Opening Pressure test V/V 1-1/4" PD Series : no lower than 550 PSI V/V 1-1/2" CH Series : no lower than 575 PSI	Main		Braden Bulletin 527-Dec,1996	300 PSI
		Aux			300 PSI
	Inspect Brake cylinder opening pressure test. CH/PD Series : 400-450 PSI.	Main		Industry Standard	500 PSI
		Aux			500 PSI
	Measure differancian of static and dynamic brake. CH/PD Series ; 150-250 PSI.	Main		Industry Standard	200 PSI
		Aux			200 PSI
	Check for external oil leaks and repair as necessary. This is extremely important due to the accelerated wear that will result from insufficient lubricating oil in the hoist.			OEM Manual	(✓)YES ( ) NO
	RECORD BOOM CYLINDER INFORMATION :	Boom cylinder Diameter:		OEM Manual	DIA: 11 Inch
		CY Number:		OEM Manual	L= 0359 R= 0359
		Serial Number:		OEM Manual	L= 4335 R= 4248
	RECORD MAIN HOIST INFORMATION :	Manufacturer:		OEM Manual	Braden
		Model:		OEM Manual	CH 210 A - 36 110-01-
		Serial Number:		OEM Manual	030-0200
	Check MAIN HOIST for proper operation and good condition			API RP 2D	(✓)YES ( ) NO
	Brake test & record pressure of MAIN HOIST.			OEM Manual	(✓)YES ( ) NO As found Good
	Change main hoist gear oil and inspect for small particles in the old oil. ** Refer to Onsite Gear Oil Sample Procedure ** ** Replace and send oil sample to SKL if abnormal ** ** Take photo of Oil Sampling for Reference**			OEM Manual	(✓)YES ( ) NO As found Good
	RECORD AUXILIARY HOIST INFORMATION :	Manufacturer:		OEM Manual	Braden
		Model:		OEM Manual	PD 12E29051-021
		Serial Number:		OEM Manual	0966360
	Check AUXILIARY HOIST for proper operation and good condition			API RP 2D	(✓)YES ( ) NO
	Brake test & record pressure of AUXILIARY HOIST			API RP 2D	(✓)YES ( ) NO
	Change Aux. hoist gear oil and inspect for small particles in the old oil. ** Refer to Onsite Gear Oil Sample Procedure ** ** Replace and send oil sample to SKL if abnormal ** ** Take photo of Oil Sampling for Reference** Please record if any abnormal condition. Note.....			OEM Manual	(✓) SEND SKL LAB ( ) NOT SEND SKL LAB
	Check pressre relief Valve: Determine hoistes' relief valve pressure gauge is working and giving accurate measurement by notice whether pressure gauge is vibrating or not. If not, set relief valve pressure in accordance with the schematic and parameters below. Record all readings.			OEM Manual	(✓)YES ( ) NO
	BOOM RELIEF VALVE TEST	Relief Specific:	3,000 PSI	OEM Manual	3000 PSI
	MAIN HOIST RELIEF VALVE TEST	Relief Specific:	2,950 PSI	OEM Manual	2900 PSI
	AUX HOIST RELIEF VALVE TEST	Relief Specific:	2,950 PSI	OEM Manual	2900 PSI
	SWING RELIEF VALVE TEST	Relief Specific:	1,200 PSI	OEM Manual	1200 PSI
	Measure Pressure of hoist motor case drains and Record Value Reference Bulletin: BRADEN Inspection, Testing, Preventive Maintenance and Special Operating Instructions For Planetary Hoists PB-308 latest edition for further details.			OEM Manual	
	MAIN HOIST CASE DRAIN for Gear Motor (Down Mode).	PRESSURE	< 100 psi	Company Spec/Standard	10 PSI
	AUX. HOIST CASE DRAIN for Gear Motor (Down Mode).	PRESSURE	< 100 psi	Company Spec/Standard	10 PSI
Hydraulic System	Check hydraulic tank oil level. Oil should be visible in the sight glass. Top up as required (3/4 Tank Minimum)			OEM Manual	(✓)YES ( ) NO
	Check hydraulic oil condition. (Check if running hours are more than 100 hours from last oil change or during Annual inspection) ** Refer to Onsite Hydraulic Oil Sample Procedure ** ** Replace and send oil sample to SKL if abnormal ** ** Take photo of Oil Sampling for Reference**		Rando HD-68	Company Spec/Standard	(✓) SEND SKL LAB ( ) NOT SEND SKL LAB
	Inspect hydraulic tank and strainer filter. Change hydraulic oil, If required with lab confirmation.			Company Spec/Standard	(✓)YES ( ) NO
	Drain off 1 liter of oil to remove condensed water. If water is present, drain until water is removed and top up with clean oil			Industry Standard	(✓)YES ( ) NO
	Check for any hydraulic leaks			Industry Standard	(✓)YES ( ) NO
	Check the hydraulic hose, piping and tubing for mechanical damage, corrosion, splits, blisters, cracking or excessive abrasion on the outer surface			API RP 2D	(✓)YES ( ) NO
	Check that all hydraulic hose connections are sound and that all mounting and pivoting connections are secure.			Industry Standard	(✓)YES ( ) NO
	Lubricate hydraulic swivel in pedestal and insure tie down restrains are in place and preventing the swivel from rotating with the crane structure.			OEM Manual	(✓)YES ( ) NO
	Ensure the filler breather on tank is not covered or clogged			Industry Standard	(✓)YES ( ) NO
	Visually inspect for missing or loose pins, pin keepers, bolts, nuts, fasteners on all pumps, motors and valves.			API RP 2D	(✓)YES ( ) NO
	* Re-tighten the stud bolt of hydraulic main pump and marking the nut for checking to prevent loosening. Note : Torqe spec model P76, P75, PGP/PGM350 ,PGP/PGM330 = 200 ft-lbs. , for model PGP/PGM315 = 140 ft-lbs. and PGP/PGM365 = 450 ft-lbs.			The Commercial Intertech manual	(✓)YES ( ) NO
	Check the filter bypass indicator, while engine is running			OEM Manual	(✓)YES ( ) NO
	With engine running (after all other items pass inspection), check the system for leaks around fittings, hoses, valves and reservoirs			Industry Standard	(✓)YES ( ) NO
	With engine running, check the source of any unusual noise or vibration that may cause or indicate equipment damage or wear			Industry Standard	(✓)YES ( ) NO
	Ensure all hoses are properly rated for the system, see "Parameters" for each system for details.			Industry Standard	(✓)YES ( ) NO
	Record hydraulic oil operating temperture. Note: Hydraulic fluid overheating temperature is over 180 F degrees or 82 C, degrees (reservoir temperature)			Industry Standard	130 Degree F
	Determine if hydraulic return pressure gauge is working and giving accurate measurements. Record readings				
	RECORD HYDRAULIC RETURN PRESSURE PARAMETERS:		60 PSI "maximum"	OEM Manual	15 PSI
	Check and inspect the hydraulic return filters and seals.			OEM Manual	(✓)YES ( ) NO
	Function Testing and record pressures with engine at :		2,200 RPM	API RP 2D	
	BOOM FUNCTION TEST (Need Crane Mech to verify each platform)			OEM Manual	
		Cracking pressure	RECORD	OEM Manual	600 PSI

[redacted] / 27 Jan 25

SYSTEM	TASK				Specification	Record/Reading
	Boom Angle : 60 Degree (Recommend or as applicable)	UP	Full Speed Pressure	RECORD	OEM Manual	700 PSI
		DOWN	Cracking pressure	RECORD	OEM Manual	1200 PSI
			Full Speed Pressure	RECORD	OEM Manual	2300 PSI
	MAIN HOIST FUNCTION TEST (Need Crane Mech to verify each platform)				OEM Manual	
	Boom Angle : 60 Degree (Recommend or as applicable)	UP	Cracking pressure	RECORD	OEM Manual	200 PSI
			Full Speed Pressure	RECORD	OEM Manual	800 PSI
		DOWN	Cracking pressure	RECORD	OEM Manual	800 PSI
			Full Speed Pressure	RECORD	OEM Manual	1500 PSI
	AUX HOIST FUNCTION TEST (Need Crane Mech to verify each platform)				OEM Manual	
	Boom Angle : 60 Degree (Recommend or as applicable)	UP	Cracking pressure	RECORD	OEM Manual	300 PSI
			Full Speed Pressure	RECORD	OEM Manual	800 PSI
		DOWN	Cracking pressure	RECORD	OEM Manual	800 PSI
			Full Speed Pressure	RECORD	OEM Manual	1500 PSI
	SWING FUNCTION TEST (Need Crane Mech to verify each platform)				OEM Manual	
	Boom Angle : 60 Degree (Recommend or as applicable)	LEFT	Cracking pressure	RECORD	OEM Manual	200 PSI
			Full Speed Pressure	RECORD	OEM Manual	600 PSI
		RIGHT	Cracking pressure	RECORD	OEM Manual	200 PSI
			Full Speed Pressure	RECORD	OEM Manual	600 PSI
Electrical system, Crane Boom Lighting and red obstruction light	Check the electrical junction boxes, wires and connections for deterioration, desiccant bags, (replace as required)				Industry Standard	(✓) YES ( ) NO
	Check the condition of the grounding and lighting protection system.				Company Spec/Standard	(✓) YES ( ) NO
	Visually inspect boom floodlight and light guards for loose, missing, corroded				Company Spec/Standard	(✓) YES ( ) NO
	Check condition pipe support , U-bolt ,nuts of boom floodlight and Electric slipring for loose , missing , corroded				Company Spec/Standard	(✓) YES ( ) NO
	Check Electric slipring/swivel for 360° continuous rotation				OEM Munnal	(✓) YES ( ) NO
	Check Water ingress, condensation in electric slipring, red obstruction light and boom floodlight				OEM Munnal	(✓) YES ( ) NO
	Check feely movement and lubricate of boom floodlight				OEM Munnal	(✓) YES ( ) NO
	With generator in operation, intergize all lights to unsure proper function.				API RP 2D	(✓) YES ( ) NO
	Check condition of crane boom lighting and safety net is secured with strong point. * **Safety net should be replace 24 months after installation (2 year)***			Last installation date _____	Company Spec/Standard	(✓) YES ( ) NO
	Check function of crane sound signal				Company Spec/Standard	(✓) YES ( ) NO ( ) N/A
	Check function of crane boom lighting at boom upper section				Company Spec/Standard	(✓) YES ( ) NO ( ) N/A
	Check function of crane boom lighting at boom lower section				Company Spec/Standard	(✓) YES ( ) NO ( ) N/A
	Check function of crane boom lighting at winch skid				Company Spec/Standard	(✓) YES ( ) NO ( ) N/A
	Check function of crane boom lighting at crane cabin				Company Spec/Standard	(✓) YES ( ) NO ( ) N/A
	Check function becon light at boom tip				Company Spec/Standard	(✓) YES ( ) NO ( ) N/A
	Inspection wire rope guide & Roller assembly				Company Spec/Standard	(✓) YES ( ) NO
	Visually inspect red obstruction light pipe support, u-bolts, nuts connection to hand rail for loose, missing, corroded				Company Spec/Standard	(✓) YES ( ) NO
	Visually inspect safety sling attached to the red obsruction light and its base for loose, missing, corroded				Company Spec/Standard	(✓) YES ( ) NO
	Visually inspect red obstruction light function. The light is designed to turn on all the time.				Company Spec/Standard	(✓) YES ( ) NO
Operator Control Station	Check general condition of control panel, bolts, paint security, etc.				API RP 2D	(✓) YES ( ) NO
	Determine if there is a serviceable fire extingulsher in the vicinity of the crane				Company Spec/Standard	(✓) YES ( ) NO
	Determine if correct load chart is in use and easily visible for operator				API RP 2D	(✓) YES ( ) NO
	Determine if charts, indicators and hand signal chart are in the cabling and firmly attached				API RP 2D	(✓) YES ( ) NO
	Determine if angle/radius indicator plate is easily visible to operator and is moving freely.				API RP 2D	(✓) YES ( ) NO
	Check condition of control levers and determine if they "dead-man" back to the neutral position.				API RP 2D	(✓) YES ( ) NO
	Check condition of pressure gauges.				API RP 2D	(✓) YES ( ) NO
	Check proper control labels are firmly installed, completely legible and properly labeled				API RP 2D	(✓) YES ( ) NO
	Check controls for freedom-of-movement				API RP 2D	(✓) YES ( ) NO
	Check condition , Leak, freely moement of Dynamic swing break system *** Note; If HYD Oil loose in CYD reservoir must be refill*				OEM Manual	(✓) YES ( ) NO
	Check condition , Leak, freely moement of Accelerate System *** Note; If HYD Oil loose in CYD reservoir must be refill*				OEM Manual	(✓) YES ( ) NO
	Check all safety glass and rubber seal for proper condition				API RP 2D	(✓) YES ( ) NO ( ) N/A
	Function Test Horn. Note;.....				Industry Standard	(✓) YES ( ) NO ( ) N/A
	Ensure PRE/POST Check List and Pocket Manual in the cabin. Note;.....				Company Standard	(✓) YES ( ) NO ( ) N/A
Load Indicator System	Visual check on fittings and connections for leaks. Fix leak if any. Note:.....				OEM Manual	(✓) YES ( ) NO
	Should any leaks exist, stop leak and recharge system, refer to maintenance manual				OEM Manual	(✓) YES ( ) NO
	Change and flushing Load cell fluid.				OEM Manual	(✓) YES ( ) NO
	Check general condition of tubbing, hoses, pins bolts, paint, etc.				Industry Standard	(✓) YES ( ) NO
	Insure load cell is free of obstructions				OEM Manual	(✓) YES ( ) NO
	Check condition of gauge(s) face and clean glass as required.				OEM Manual	(✓) YES ( ) NO
	Check the scale's operation and weighing accuracy. (Main Hoist) Remark : Maximum variance +/- 2% Note;.....				Company Spec/Standard	(✓) YES ( ) NO ( ) N/A
	Check the scale's operation and weighing accuracy. (Aux. Hoist) Remark : Maximum variance +/- 2% Note;.....				Company Spec/Standard	(✓) YES ( ) NO ( ) N/A
	Check the internal casting fluid of weight indicator. top up if required				Industry Standard	(✓) YES ( ) NO ( ) N/A
	Insure SWL tag matches ratings on the Crane Load Chart.				OEM Manual	(✓) YES ( ) NO ( ) N/A
	Insure Boom Length, matches the Crane Load Chart				OEM Manual	(✓) YES ( ) NO ( ) N/A
	Insure Boom Angle measurements and readings match the boom angle indicator.				OEM Manual	(✓) YES ( ) NO ( ) N/A
	Insure Boom Radius measurements indicate the distance from center line of the crane to the hook				OEM Manual	(✓) YES ( ) NO ( ) N/A
	Check Main load cell gap 1/4 (0.250) inch				OEM Manual	(✓) YES ( ) NO ( ) N/A
	Check Aux load cell gap 3/8(0.380) inch (Compression Load Cell Type)				OEM Manual	(✓) YES ( ) NO ( ) N/A

[redacted] / 27 Jan 25

SYSTEM	TASK	Specification	Record/Reading
Pedestal & Structure	Visually check Pedestal for chipped/cracked paint, deformation, worn parts, dents, corroded areas, cracks weld, etc.	API RP 2D	(✓) YES ( ) NO
	Check water rain drain at pedestal must be not obstuct	Industry Standard	(✓) YES ( ) NO
	Check pin and cotter pin of pedestal missing , corrosion, wear, damage and exercise pin.	Industry Standard	(✓) YES ( ) NO
	Visually check Base - Plate connection and Base hoist Structure for chipped/cracked paint, deformation, worn parts, dents, corroded areas, cracks weld, etc.	API RP 2D	(✓) YES ( ) NO
	Check A fixed such as Handrial, Walkway, Grating, stationary structure without significant movement in response to waves and currents in normal operating conditions.	API RP 2C	(✓) YES ( ) NO
	Visually check and lubricate maintenance Jib. ***Note*** If on pedestal crane	OEM Manual	(✓) YES ( ) NO ( ) N/A
	Check maintenance jib is secure firmly. ***Note*** If on pedestal crane	OEM Manual	(✓) YES ( ) NO ( ) N/A
Box Boom & Luffing CYD	Check and Verify entire box boom and Boom CYD for loss of protective coating and corrosion. Note;.....	API RP 2D	(✓) YES ( ) NO
	Check and Verify entire box boom and Boom CYD for chipped/cracked paint, deformation, worn parts, dents, corroded areas, cracks, etc. Note;.....	API RP 2D	(✓) YES ( ) NO
	Check and Verify boom end connections, for bends, dents, corroded areas, cracked welds, and signs of mechanical damage, wear, etc. **any deviation should be reported**	API RP 2D	(✓) YES ( ) NO
	Check and Verify boom rest and wooden support to ensure it's in good condition	API RP 2D	(✓) YES ( ) NO
	Inspect pin and pin holes of Upper tank and Lower tank for excessive clearance	OEM Manual	(✓) YES ( ) NO
	BOOM CYLINDER PIN MAXIMUM TOLERANCE — 0.125 Inch (3mm)	Industry Standard	As found.....Good.....
	Check BOOM CYLINDERS for proper operation and good condition	API RP 2D	(✓) YES ( ) NO
	Check Boom cylinder barrels and rods for leaks, mechanical damage and corrosion	Industry Standard	(✓) YES ( ) NO
	Check and measurement boom foot pin and connection pins for clearance	Industry Standard	
	BOOM FOOT PINS & BOOM BOX CONNECTER PIN TOLERANCE — 0.125 Inch (3mm)	Industry Standard	
	Boom Foot Pin Tolerance	Industry Standard	0.125 Inch
	Boom Box Connecter Pin Tolerance	Industry Standard	0.125 Inch
	Check connecting bolts of box boom loose, corrosion, wear, damage	OEM Manual	(✓) YES ( ) NO
	Lubricate boom foot pins and bushings	OEM Manual	(✓) YES ( ) NO
	Lubricate boom cylinder pins, bearings and bushings	OEM Manual	(✓) YES ( ) NO
	Boom function test angle/radius to correction **Note; The cylinder(s) mechanism shall be capable of elevating the boom from a minimum of zero degrees to the maximum recommended boom angle.	API RP 2C	(✓) YES ( ) NO
	Operation functional test and verify Boom Creeping down **Note ; Test at angle 60 °	Industry Standard	( ) YES (✓) NO As found.....Good.....
Wire Rope	Determine if parts-of-line match parts of line on the load chart in the crane cabin.	API RP 2D	(✓) YES ( ) NO
	Determine if visible portion of wire rope adequately lubricated. If not lubricate wire rope	API RP 2D	(✓) YES ( ) NO
	For each layer of wire rope on drum, check that all rope is parallel and each crossover point at hoist flanges is correct	API RP 2D	(✓) YES ( ) NO
	The top layer of rope must not be lower to the flange tips 2.5 in for Smooth drum,2 in for groove drum or 2.5 times of wire rope diameter	API RP 2C	(✓) YES ( ) NO
	Inspect wire rope for, kinking, crushing, broken wires, necking down of rope diameter, worn outside wires, corroded or broken wires at end connection, cutting or unstringing.	API RP 2D	(✓) YES ( ) NO As found.....Good.....
	NoteRunning Ropes of rotation-resistant construction used in the main or auxiliary Hoist: - Four (4) Randomly distributed broken wires within 30 rope diameter - Two (2) broken wires in one stand within 6 rope diameter	API RP2D Edition 7	(✓) YES ( ) NO As found.....Good.....
	One valley break can indicate internal rope damage requiring close inspection of this section of the rope. When one or more valley breaks are found in one lay length the rope should be retired.	API RP2D Edition 7	(✓) YES ( ) NO As found.....Good.....
	Reductions for the rope diameter, from initial wire rope dimensional measurements, in a nonworking area (an area away from the sheaves) compared to the lowest diameter of rope measured in three working areas (areas where the rope regularly goes over a sheave) of more than the following is observed: — 3/64 in. (0.047 in.) (1.2 mm) for diameters up to and including 3/4 in. (19.1 mm); — 1/16 in. (0.062 in.) (1.6 mm) for diameters of 7/8 in. to 1-1/8 in. (22.2 mm to 28.6 mm); — 3/32 in. (0.093 in.) (0.8 mm) for diameter of 1-1/4 in. to 1-1/2 in. (31.8 mm to 38.1 mm); — For rope diameters greater than 1-1/2 in., a 5 % diameter loss from baseline measurement. —Wear of one-third the original diameter of the outside individual wires.	API RP2D Edition 7	(✓) YES ( ) NO As found dimension.....Good.....
	Increase in the length of an individual rope lay is observed. This increase in lay length and accompanying reduction in diameter can be caused by failure of the core. This can occur more readily in ropes or rotation-resistant construction.	API RP2D Edition 7	(✓) YES ( ) NO As found.....Good.....
	-Inspection and Verify running and standing rope from heat effect **Note; Not more than 250°C -There is evidence of heat damage from any source (i.e. engine exhaust, flare towers, stress corrosion cracking, etc.). Heat can be generated by passing a rope over a frozen or non-turning sheave, contact with structural members of the crane, improperly grounded welding leads or lightning strikes	Industry Standard	(✓) YES ( ) NO As found.....Good.....
	With the boom at the highest possible angle and the main load block or overhaul ball at the water level, ensure there is a minimum of 5 wraps of wire-rope remaining on the drums. Note: (Thai law, requires minimum of 2 wraps)	API SPEC 2C / Thai Law	(✓) YES ( ) NO
	Reference: - Running rope safety factor not less than 6 for wire rope that are running wire, (Thai law; Wire rope nominal breaking strength x number parts of line / Design factor 6) - Standing rope safety factor not less than 3.5 for wire rope that are stay cables, (Thai law)	Thai Law	(✓) YES ( ) NO ( ) N/A
	Measure and record nominal diameter of "running ropes"main and auxiliary (particularly on drum, equalizer sheave and at sockets, clips and dead end points) *****Nominal = several measurements added together divided by Number of measurements*****	API RP 2D	(✓) YES ( ) NO
	Inspect wire rope and record dimension.	API RP 2D	
	MAIN WIRE ROPE OD: — FULL DRUM	OEM Manual	0.770 Inch
	MAIN WIRE ROPE OD: — HALF DRUM	OEM Manual	0.767 Inch
	MAIN WIRE ROPE OD: — WATER LEVEL	OEM Manual	0.771 Inch
	AUX WIRE ROPE OD: — FULL DRUM	OEM Manual	0.668 Inch
	AUX WIRE ROPE OD: — HALF DRUM	OEM Manual	0.570 Inch
	AUX WIRE ROPE OD: — WATER LEVEL	OEM Manual	0.571 Inch
	Slip-Cut 1 meter of all ropes at the wedge socket and re-wedge to prevent rust inside of wedge socket (at outward end of rope, not on hoist drum) Dead end tail length is never less than 6 inches, or: - Standard 6 to 8 Strand wire rope is not less than 7 times the rope diameter - Rotation Resistant Wire Rope is not less than 20 times the rope diameter	Company Spec/Standard	(✓) YES ( ) NO

[redacted] / 27 Jan 25

SYSTEM	TASK	Specification	Record/Reading
	U-bolt and Fist Grip Clips: Extreme care should be exercised to assure proper orientation of U-bolt clips. The U-bolt segment shall be in contact with the wire rope dead-end. The orientation, spacing, torquing, and number of all clips shall be in accordance with the crane manufacture's specifications.	API SPEC 2C	(✓) YES ( ) NO
	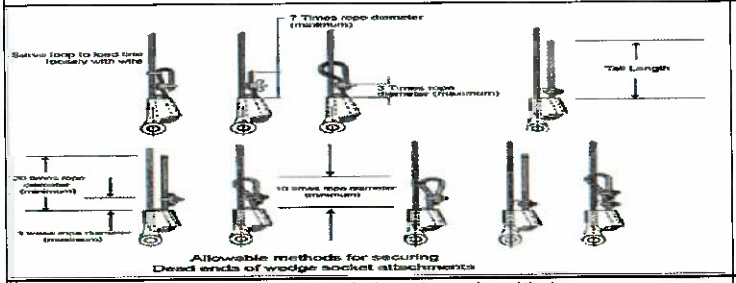	API SPEC 2C	Model ans Size wedge socket. Main hoist. Model..... Size..... Aux.Hoist. Model..... Size.....
	Verify that the wedge socket and wedge are the correct size for the rope in use and record the size	API SPEC 2C	(✓) YES ( ) NO
Sheaves & Bearings	Lubricate all sheave bearings.	API RP 2D	(✓) YES ( ) NO
	Visually inspect all sheaves and bushings for cracks, wear and deterioration	API RP 2D	(✓) YES ( ) NO As found.....Good
	Visually inspect wire rope track of sheave for rope imprints, wear and deterioration. If damage exist sheave should be resurfaced or replaced.	API RP 2D	(✓) YES ( ) NO As found.....Good
	Pins retained by snap rings, bolt lock shafts, plates lock should be checked for missing or loose for all	API RP 2D	(✓) YES ( ) NO
	Check wirerope guards and keepers for proper location and condition.	API RP 2D	(✓) YES ( ) NO
	Determine if wire rope is jumping the sheaves, by looking for signs of damage on the sheave brim	Industry Standard	(✓) YES ( ) NO
	Sheave Rope Profile for optimum Rope life the sheave groove profile should be correctly matched to the rope diameter	Industry Standard	(✓) YES ( ) NO
	Check rope sheave should be machine grooved to adepth of not less than 1.5 times the norminal diameter of the rope	Industry Standard	(✓) YES ( ) NO
	MAIN POINT SHEAVES: Note;.....	Industry Standard	No.1 (✓) YES ( ) NO No.2 (✓) YES ( ) NO
	AUX SHEAVES: Note;.....	Industry Standard	No.1 (✓) YES ( ) NO
	IDLER SHEAVES: Note;.....	Industry Standard	AUX. (✓) YES ( ) NO Main (✓) YES ( ) NO
	Pins for bronze bushing and straight roller bearing should have a running clearnace of .031 inch/ sheave of end play and should be adjusted accordingly.(count from left)	Industry Standard	(✓) YES ( ) NO
	MAIN POINT SHEAVES:	Industry Standard	Sheave No.1..... inch Sheave No.2..... inch
	AUX SHEAVES:	Industry Standard	Sheave No.1..... inch
	IDLER SHEAVES:	Industry Standard	Sheave AUX..... inch. Sheave Main..... inch.
	Ensure the sheaves are aligned and the fleet angle is correct **Remark ; Wire rope User's Manual allows 2 degree on grooved winch drum, Smooth Drum shuold be not more than 1-1/2 degree	API RP 2D	( ) YES ( ) NO
	Determine if wire rope size and sheave sizes/grooves are compatible and record size. Sheave pitch diameter (D) to nominal wire rope diameter (d) ratio (D/d) shall not be less than 18:1	API SPEC 2C	( ) YES ( ) NO
	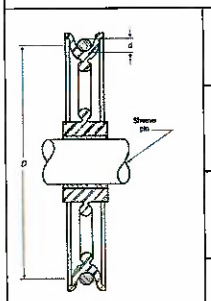 MAIN POINT SHEAVES: SHEAVE D / WIRE ROPE d = >18	API SPEC 2C	18 inch (D) 0.750 inch (d) 24 (Ratio D/d)
	AUX SHEAVES: SHEAVE D / WIRE ROPE d = >18	API SPEC 2C	16 inch (D) 0.750 inch (d) 29 (Ratio D/d)
	IDLER SHEAVES: SHEAVE D / WIRE ROPE d = > 18 (If applicable)	API SPEC 2C	18 inch (D) 0.750 inch (d) 16 (Ratio D/d)
	MAIN BLOCK SHEAVES: SHEAVE D / WIRE ROPE d = > 16	API SPEC 2C	0.750 inch (D) inch (d) 24 (Ratio D/d)
Load Block	Load Block: Check the load block for cleanliness, binding sheaves, damaged or worn sheaves, worn or distorted sheave pins, broken bolts, and worn cheek weights. Note ;.....	Industry Standard	(✓) YES ( ) NO As found.....Good
	Hook: Check the hook damage, excessive wear to the hook safety latch, hook swivel trunnions, thrust collar, securing, damage or missing lubrication fittings, proper lubrication, cracks and gouges, and if visibly bent or twisted or has been exposed to welding or arching. Note ;.....	Industry Standard	(✓) YES ( ) NO As found.....Good
	Hook: Tip has been bent more than 10 degree out of plane from the hook body	Industry Standard/API RP2D7	(✓) YES ( ) NO As found.....Good
	Inspect the Pins for bronze bushing and straight roller bearing should have a running clearnace of .031 inch/ sheave of end play and should be adjusted accordingly	Industry Standard	(✓) YES ( ) NO
	Inspect Hook or shackle to swivel case clearance is set at .031 to .062 inch, Clearance exceeding .12 to .18 (ONLY CROSBY BRAND)	OEM Crosby	(✓) YES ( ) NO
	OEM STANDARD RECOMMEND that Crane block removal from service untill replaced and repair following below	OEM STANDARD	

27 Jan 25 / [redacted]

SYSTEM	TASK	Specification	Record/Reading
	- Elongated center pin and hook trunnion holes exceeding 5% of Original diameter	OEM STANDARD	(✓) YES ( ) NO As found Good
	-Material loss due to wear exceeding 10% of original section	OEM STANDARD	(✓) YES ( ) NO As found Good
	-Sheave wire rop groove diameter smaller than 2.5%	OEM STANDARD	(✓) YES ( ) NO As found Good
	Loosened tie bolts nuts, center pin round nuts, check weight cap screws and hook nut cap screws. Tie bolt nuts to be torqued to 35-40 ft.Lbs and restaked, all other fasteners wrench tight	OEM STANDARD	(✓) YES ( ) NO
	Throat opening - any distortion causeing an increase in throat opening of 5% not ot exceed 1/4 in. (6 mm.)(or as recommended by the manufacturer)	ASME B30.10	(✓) YES ( ) NO
	Inspect rope track worn in sheave groove, sheave must be resurface or replace	API RP 2D	(✓) YES ( ) NO
	Ensure the load block is not using "Cast Iron" cheek weights they can not be used as per API	API SPEC 2C	(✓) YES ( ) NO As found Good
	Determine if all hooks are equipped with properly operating safety latches and check for proper functioning	API RP 2D	(✓) YES ( ) NO
	Lubricate sheave bearings and swivels	OEM Manual	(✓) YES ( ) NO
	Re-thighten nut firmly to point at which trunion will just rotate, the Re-tighten set-screw in nut and thread condition as in the picture below,	Industry Standard	(✓) YES ( ) NO
	Last NDE inspection record	Industry Standard	Last inspect date
	RECORD LOAD BLOCK INFORMATION : Manufacturer:	OEM Manual	Mckissick
	Model:	OEM Manual	MB 035M 6M
	Serial Number:	OEM Manual	015047
	Record Load block measurements and details for future comparison with historical data	Industry Standard	(✓) YES ( ) NO
	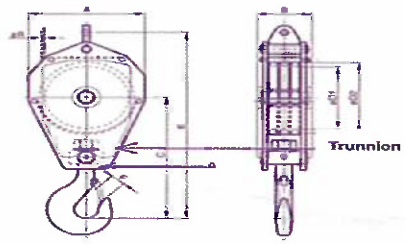 A - Block OD	Industry Standard	20 mm/ inch
	B - Block length	Industry Standard	10 mm/ inch
	C - Center of Pin to hook Saddle	Industry Standard	31 mm/ inch
	D1 - Sheave Diameter	Industry Standard	16 mm/ inch
	E - Block Width	Industry Standard	38.5 mm/ inch
	F - Throat Opening	Industry Standard	7 mm/ inch
	G - Trunnion	Industry Standard	0.24 mm/ inch
Aux. Ball	Inspect Auxiliary ball for cleanliness, binding swivel, work pad-eye hole. Inspect the hook damage, excessive wear to the hook safety latch, Bent connector plates,Severe corrosion pitting, hook swivel trunnions, thrust collar, securing, damage or missing lubrication fittings,Loose, missing or damaged retaining nuts, cotter pins or swivel set screws ,Missing or illegible rating and warning tags, proper lubrication, cracks and gouges, and if visibly bent or twisted or has been exposed to welding or arching	Industry Standard	(✓) YES ( ) NO
	Hook: Tip has been bent more than 10 degree out of plane from the hook body	Industry Standard/API RP2D7	(✓) YES ( ) NO
	OEM STANDARD recommend that Crane overhaul ball removal from service untill replaced and repair following below	OEM STANDARD	
	- Elongated ball pin holes, hook latch pin holes and swivel eye exceeding 5% of original diameter,	OEM STANDARD	(✓) YES ( ) NO As found Good
	-Swivel end play gap exceeding .08". Excessive end play indicates damaged internal set screw	OEM STANDARD	(✓) YES ( ) NO As found Good
	-Material loss due to wear exceeding 10% of original section	OEM STANDARD	(✓) YES ( ) NO As found Good
	Throat opening - any distortion causeing an increase in throat opening of 5% not ot exceed 1/4 in. (6 mm.)(or as recommended by the manufacturer)	ASME B30.10	(✓) YES ( ) NO
	All hooks that lift personnel are to have a positive locking safety latch **locking Pin to be used while lifting personnel**	API RP 2D	(✓) YES ( ) NO
	*** Temperature Effected : When hooks are to be used at temperature above 400° F. (204°C) or below -40°F (-40°C), the hook manufacturer or a qualified person should be consulted *** Chemically Active Environment : The strength of hooks can be affected by chemically active environments, such as caustic or acid substances or fumes. The hook manufacturer or qualified person should be consulted before hooks are used in chemically active environment	ASME B30.10	o.k
	Verify to ensure nut firmly at which trunion rotate. Identify to set-screw in nut/ swivel/ counter pin and thread condition.	Industry Standard	(✓) YES ( ) NO
	Last NDE inspection record	Industry Standard	Last inspect date
	RECORD AUX BALL INFORMATION : Manufacturer:	OEM Manual	Mckissick.
	Model:	OEM Manual	MB 07T950E
	Serial Number:	OEM Manual	015036
	Record Auxiliary Ball measurements and details for future comparison with historical data: For Model MB07T200E ONLY	Industry Standard	
	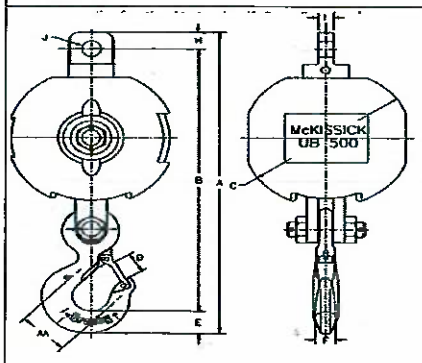 AA Dimensions 3.0 Inch	Industry Standard	3 mm/ inch
	A Dimensions 24.89 Inch	Industry Standard	24 mm/ inch
	B Dimensions 21.71 Inch	Industry Standard	22 mm/ inch
	C Dimensions 12.50 Inch	Industry Standard	12 mm/ inch
	D Dimensions 1.61 Inch	Industry Standard	1.65 mm/ inch
	E Dimensions 1.81 Inch	Industry Standard	1.9 mm/ inch
	F Dimensions 1.38 Inch	Industry Standard	1.39 mm/ inch
	H Dimensions 1.38 Inch	Industry Staadard	1.39 mm/ inch
	I Dimensions 0.88 Inch	Industry Standard	0.86 mm/ inch
	J Dimensions 1.31 Inch	Industry Standard	1 1/4 mm/ inch
Safety system	Check Condition anti - two block , hanging chain ,eye bolts , fix bolts , shackle for missing , corrosion , erosion , deformation	API RP 2D	( ) YES ( ) NO

[redacted] / 29 Jan 25

SYSTEM	TASK	Specification	Record/Reading
	Check anti - two block kick out plate for freely movement	Company Spec/Standard	(✓) YES ( ) NO
	Check anti-2-block device proper function of Main winch	Company Spec/Standard	(✓) Function ( ) False
	Check anti-2-block device proper function of Aux. winch	Company Spec/Standard	(✓) Function ( ) False
	Check relation of boom radius and boom angle (lowest, middle, highest) with refrence to load chart. Recharge fluid W-15 to load indicator, if required.	API RP 2D	(✓) YES ( ) NO
	Functional test of emergency lowering system (See procedure in Emergency Load Lowering Box). Note: Keep for 1 Yr PM to sustain crane mechanic competency. Caution: Function test must be performed on top deck with max 2-foot height.	Company Spec/Standard	(✓) YES ( ) NO ( ) N/A
	Visually check emergency load lowering kit. Ensure EMERGENCY LOWERING PROCEDURE and MATERIAL LIST are in the box. - Ensure ALL items shown on the list are in the box and in good condition - SECURE THE BOX WITH A TIE WRAP.	Company Spec/Standard	(✓) YES ( ) NO ( ) N/A
Slew Mechanism	Visually check for damage and excessive wear on gear teeth	OEM Manual	(✓) YES ( ) NO
	Visually check slew gear box in the area of oil seal for any leaks	API RP 2D	(✓) YES ( ) NO
	RECORD SLEW GEAR BOX INFORMATION : Manufacturer:	OEM Manual	BSE
	RECORD SLEW GEAR BOX INFORMATION : Model:	OEM Manual	150A
	RECORD SLEW GEAR BOX INFORMATION : Serial Number:	OEM Manual	49206
	CHECK and RE-TORQUE swing drive gearbox mounting bolts at following brands: - ESKRIDGE, Model: 250 = 150 FT-LBS	API RP 2D	(✓) Yes ( ) No
	Check swing gearbox oil level/condition, top up if required	OEM Manual	(✓) YES ( ) NO
	Monitor slew gearbox oil condition by visually examine for burnt smell, metal particles, and/or other contaminants, record and change if found. (Meropa 220)	OEM Manual	(✓) CHANGE OIL ( ) NOT CHANGE OIL
	Change slew gear box oil (Meropa 220)	OEM Manual	(✓) CHANGE OIL ( ) NOT CHANGE OIL
	Grease all pivot points of slew ring (bearing)	OEM Manual	(✓) YES ( ) NO
	Grease open gears (pinion)	OEM Manual	(✓) YES ( ) NO
	Rotate crane 360 degree and check smoothness of operation	OEM Manual	(✓) YES ( ) NO
	Check swing drive static parking brake for proper operation Caution: DO NOT stop the swing of the crane with this static brake (parking brake)	OEM Manual	(✓) YES ( ) NO
	Check swing drive dynamic parking brake for proper operation	OEM Manual	(✓) YES ( ) NO
	Check swing lock mechanism condition; corrosion ,dent , loos all part,worn and wear	OEM Manual	(✓) YES ( ) NO As found condition Good
	Check swing lock mechanism freely lock and unlock for function. **Check and inspect for hydraulic for leaks on actuator model.**	OEM Manual	(✓) YES ( ) NO As found condition Good
	Check condition of slew ring bolts e.g. Bolt grade and washers. Caution: Use only hardened flat washers under head of bolt. Do not use lock washers, or regular flat washers.	Industry Standard	(✓) YES ( ) NO As found condition Good
	Monitor ball-ring grease sample. If found wear and tear particles, take sample and send to lab. **Wear assessment by grease sample analysis—wear may be monitored by periodic grease sample analysis as describe in this section. Grease samples should be collected every twelve months as a minimum and the results of the analysis recorded; this period should be shortened if obvious metal or contaminants are present.	API PR 2D	(✓) SEND TO LAB ( ) NOT SEND TO LAB As found Good
	Verify crane condition and load test as separate procedure.	API 2C	(✓) YES ( ) NO Specific test load Good.
	Verify crane condition and load test as separate procedure. " Record crane load test in load test form."	Company Standard	(✓) YES ( ) NO

Table 1—Static/Onboard Test Load and Radius

Static/Onboard Rated Load at a Specific Radius lb (kg)	Test Loads In Excess of Static/Onboard Rated Load at a Specific Radius
≤ 40,000 (18,144)	25 %
> 40,000 ≤ 100,000 (>18,144 ≤ 45,356)	10,000 lb (4536 kg)
> 100,000 (45,356)	10 %

Risk Level Definitions: The following 3 levels indicate the impact the noted deficiency poses to the operation or structural integrity of the equipment:

Level 1 = Incidental	Level #2 = Restricted Operation	Level #3 =Out of Service
Minor deficiency that is recommended to be promptly addressed, but poses no safety and/or environmental risk. The crane can still be operated at full duty.	Deficiency identified that has the potential to limit, de-rate or damage the crane, its surroundings and/or the environment. The duty and locked/ tagged out until the crane's duty and operation should be de-rated or service restricted.	The crane should be removed from duty and locked/ tagged out until the deficiency is rectified.

System:	Risk Level:	Component:		In Accordance with:
		Location:		Date Originated:

Description: Hydraulic Swivel unit oil leak and Change HYD. oil.

Recommended Action:

Recommended urgency timeframe for corrective action: WO. 1226542 | Completed Date: | Completed By:

System:	Risk Level:	Component:		In Accordance with:
		Location:		Date Originated:

Description:

Recommended Action:

Recommended urgency timeframe for corrective action: | Completed Date: | Completed By:

System:	Risk Level:	Component:		In Accordance with:
		Location:		Date Originated:

[redacted] / 27 Jan 25

SYSTEM	TASK			Specification		Record/Reading
Description:						
Recommended Action:						
Recommended urgency timeframe for corrective action:			Completed Date:		Completed By:	

System:	Risk Level:	Component:		In Accordance with:	
		Location:		Date Originated:	
Description:					
Recommended Action:					
Recommended urgency timeframe for corrective action:			Completed Date:		Completed By:

System:	Risk Level:	Component:		In Accordance with:	
		Location:		Date Originated:	
Description:					
Recommended Action:					
Recommended urgency timeframe for corrective action:			Completed Date:		Completed By:

System:	Risk Level:	Component:		In Accordance with:	
		Location:		Date Originated:	
Description:					
Recommended Action:					
Recommended urgency timeframe for corrective action:			Completed Date:		Completed By:

THE PEDESTAL CRANE CONDITION VERIFICATION

Date : 26-01-25			
Crane Owner : CTEP/ COTL Field: Benchamus Platform/ Vessel: BEND			
Crane Owner 's representative : (Mech Supv./ M'Dent) [redacted]			
Qualified inspector : (Qualified Crane Mechanic)			
Inspector 's company / agency : (Third Party or Outsource to witness if applicable)			
Manufacture Manitowoc Fabrication by oil state Year of Fabrication Apr 2001 Country USA Model / Serial 2000B-50 / 010109C Standard API Edition API			Remark
Safe Working Load (SWL) —> OEM	14.3 Metric Tonnes		
Safe Working Load (SWL) —> Existing via MOC, if applicable	- Metric Tonnes		
Boom length, Main	50 Ft		
Boom length, Auxiliary if applicable	- Ft		
Part of line main hoist	4 Part line		
Part of line auxiliary hoist	1 Part line		
Safe Working Load at longest boom radius	50 ft	10.1 Metric Tonnes/ Lbs	
Safe Working Load at shortest boom radius	6 ft	14.3 Metric Tonnes/ Lbs	
The document of crane specification for Testing , Maintenance and Inspection are provided by:	OEM	MOC / Crane Engineer	
Has the crane ever been modified by MOC ? (To verify if this crane is modified with MOC –> Allow to test the crane. If this crane is modifed without MOC –> Not allow to test the crane)	YES	NO	(Employers are not allowed to modify or adjust any part of cranes or dericks or consent to other persons to do these things, that might reduce the safety of the employees who work with the cranes or derricks).
Does the rotating part have proper guard in place?	YES	NO	(Need mitigation plan)
Is the ladder and hand rail in place?	YES	NO	(Need mitigation plan)
Is the maintenance platform in place?	YES	NO	(Need mitigation plan)
Is the SWL tag labelled on crane pedestal, main block or aux ball?	YES	NO	(Need mitigation plan)
Verify if the crane major component damaged or not	YES (Need to repair or mitigate unsafe condition with MOC before testing)	NO	(Employers shall not allow employees work with damaged/ unsafe cranes or derricks)
Inspect boom end connections, for bends, dents, corroded areas, cracked welds, and signs of mechanical damage, wear, etc. **any deviation should be reported** Level 1 = Incidental : Minor deficiency that is recommended to be promptly addressed, but poses no safety and/or environmental risk. The crane can still be operated at full duty. –> Allow to test Level #2 = Restricted Operation: Deficiency identified that has the potential to limit, de-rate or damage the crane, its surroundings and/or the environment. The duty and locked/ tagged out until the crane's duty and operation should be de-rated or service restricted. –> To be derated Level #3 = Out of Service;The crane should be removed from duty and locked/ tagged out until the deficiency is rectified. –> Not Use	YES (To be verified)	NO	
Function Load Testing			
1. Verify Crane SWL (Existing)	2.4 Metric Tonnes		
2. Verify routine maximum actual load.	3.0 Metric Tonnes		
3. Select the specimen load to be more than actual routine load 1.25 times but not more than SWL. Example # 1 : Crane 's SWL is 18 Metric Tonnes. The routine maximum actual load is 2.4 Metric Tonnes. Therefore, the load testing shall be 2.4 x 1.25 = 3 Metric Tonnes. Example # 2 : Crane 's SWL is 18 Metric Tonnes. The routine maximum actual load is 16 Metric Tonnes. By calculation, the load testing is 16 x 1.25 = 20 Metric Tonnes more than SWL (18 MTon). **Therefore, the load testing shall be 18 Metric Tonnes equal to SWL.**	3.0 Metric Tonnes		
4. Use Auxiliary Winch if specimen load less than or equal 3 Metric Tonne	YES	NO	
5.Use Main Winch if specimen load more than 3 Metric Tonne	YES	NO	
6. The record of load testing : Fill in "Function Test Record" sheet attached.			

RECORDED FUNCTION TEST PROCEDURE

1. CHECK AND RECORD READING RADIUS AND BOOM INDICATIOR AT FOUR (4) VALUES INCLUDING MAXIMUM AND MINIMUM.

(ALL REDIUS MEASUREMENT ARE TO BE TEKEN FROM THE CENTERLINE OF CRANE ROTATION)

ACTUAL	INDICATED RADIUS (FT)
A) 15' (MINIMUM)	15
B) 20'	20
C) 25'	25
D) 30' (INTERMIDIATE)	30
E) 40'	40
F) 50' (INTERMIDIATE)	50
G) 60'	60
H) 75' (MAXIMUM)	75

2. CHECK AND RECORD READING ON BOOM ANGLE / DEGREES.

SPECIFICATION	INDICATED BOOM ANGLE (DEGREES)
1). MAXIMUM. .....82..... DEGREES	82
2). INTERMEDIATE. .....60..... DEGREES	60
3). INTERMEDIATE. .....45..... DEGREES	45
4). MINIMUM. .....0..... DEGREES	0

3. READING ON LOAD INDICATOR WITHOUT SLINGS OR LOAD / LBS. (LOAD BLOCK + WIRE ROPE)

ACTUAL	INDICATOR READ FREE LOAD, (LBS)
1). MAXIMUM RADIUS 600 LBS.	600 LBS
2). MINIMUM RADIUS 600 LBS,	750 LBS

4. CHECK AND RECORD ENGINE HIGH IDLE SPEED / RPM.

SPECIFICATION	INDICATED OF FUNCTIONAL (RPM)
1). IDLE SPEED 850 RPM	850
2). LOW SPEED 850 RPM	850
3). HIGH SPEED 2200 RPM	2200

5. FUNTIONALLY TEST THE FOLLOWING.

ACTUAL	INDICATED OF FUNCTIONAL (TESTED)
A) MAIN HOIST ANTI -TWO BLOCK.	Function
B) AUXILIALY HOIST ANTI -TWO BLOCK.	Function
C) HIGH BOOM ANGLE KICK OUT.	N/A
D) LOW BOOM ANGLE KICK OUT.	N/A
E) PRIME MOVER SHUTDOWN.	OK
F) EMERGENCY SHUTDOWN.	OK
G) ROTATE CRANE 360 LEFT.	OK
H) ROTATE CRANE 360 RIGHT.	OK.

6. RECORD HYDRAULIC RELIEF VALVE PRESSURE SETTING ON FOLLOWING HYDRAULIC FUNCTION:

SPECIFICATION	INDICATED PRESSURE (PSI)
A) MAIN HOIST ...2900... PSI.	2900
B) AUXILIALY HOIST ...1900... PSI.	2000
C) BOOM HOIST ...3000... PSI.	3000

TEST CONDUCTED BY: [redacted] POSITION : Jr. Mech

CRANE OPERATOR : [redacted] POSITION :

COMMENTS : DATE : 26-01-25

WO: 1244439 3y Crane PM. Run hour: 4236 Hr.

CRANE Mfg. : Nautilus
MODEL: 180B-80
SERIAL NUMBER : Crane Specific

LOCATION BEWF

C2 / BEWF ,J ,K ,N ,P ,BNWL ,NJWA

DATA BASE - PM JOB TASK CARD

Crew Size: 4
Estimated Hours:

SYSTEM	TASK		Specification	Record/Reading
Safety	Perform Job Safety Analysis (JSA)		Company Spec/Standard	(✓) YES ( ) NO
	Obtain "COMPANY" PERMIT TO WORK		Company Spec/Standard	(✓) YES ( ) NO
	Perform Tool Box Talk		Company Spec/Standard	(✓) YES ( ) NO
	BEFORE/AFTER JOB EXECUTION: Ensure to comply with isolation procedure (LOCK OUT/TAG OUT, WARNING SIGNS and BARRIERS).		Company Spec/Standard	(✓) YES ( ) NO
Required Tools	Insure proper tools are available at the job site		Company Spec/Standard	(✓) YES ( ) NO
	Tool bag		Company Spec/Standard	(✓) YES ( ) NO
	Tool box		Company Spec/Standard	(✓) YES ( ) NO
	Tool Container		Company Spec/Standard	(✓) YES ( ) NO
	MPI equipment and operator		Company Spec/Standard	(✓) YES ( ) NO
	Check safety harness Software and Hardware should be good condition before use		Company Spec/Standard	(✓) YES ( ) NO
	Check Rescue Equipment ready to use onsite		Company Spec/Standard	(✓) YES ( ) NO
	Portable Scaffolding and Crew if require		Company Spec/Standard	(✓) YES ( ) NO
Lubricants	Insure proper lubricants and consumables are available at the job site.		Company Spec/Standard	(✓) YES ( ) NO
	Hydraulic System - Hydraulic Oil	Rando HD-68	OEM Manual	(✓) YES ( ) NO
	Slew Gearbox - Gear Oil	Meropa 220	OEM Manual	(✓) YES ( ) NO
	Auxiliary Hoist - Gear Oil	Meropa 220	OEM Manual	(✓) YES ( ) NO
	Main Hoist - Gear Oil	Meropa 220	OEM Manual	(✓) YES ( ) NO
	Grease Points - Lithium Based **IT MUST NOT INCLUDE MOLYBDENUM DISULPHIDE**	MULTIFAK EP#2	OEM Manual	(✓) YES ( ) NO
	Open Gear Teeth - Open Gear Lube highly water resistant and of an adhesive nature.	OMEGA 73	OEM Manual	(✓) YES ( ) NO
	Pneumatic Lubricator	SAE Grade 10	OEM Manual	(✓) YES ( ) NO
	Wire rope Lubricant Company preferred grade	Birlube 70	OEM Manual	(✓) YES ( ) NO
	Engine Oil - SAE Grade 15W-40 (Delo Gold)	15W-40	OEM Manual	(✓) YES ( ) NO
	Safe Load indicator fluid	W-15	OEM Manual	(✓) YES ( ) NO
	Engine Radiator - Should have radiator preservatives additives	Cat® SCA	OEM Manual	(✓) YES ( ) NO
Consumables	Spray Cold Galvanize		Company Spec/Standard	(✓) YES ( ) NO
	Denso Tape		Company Spec/Standard	(✓) YES ( ) NO
	WD-40		Company Spec/Standard	(✓) YES ( ) NO
History Review	Before starting work, tasks preparation at least 1 day prior to starting work: 1. Review history PM/ CM from Roving Team, 2. Review last PM/ CM/ PMI from Crane Mech, 3. List out all punch list and prepare parts. 4. Review last Certificate task performed		API RP 2D	(✓) YES ( ) NO
	Require to update part history from Crane Mech on following main compenents to ensure the right parts are prepared: - Aux/ Main/ Boom Cylinder, Engine, Swing Gearbox, etc. Reference: Crane OEM information of each part need to be recorded - Manufacturer & Contact info - Model & serial number - Installation date		Company Spec/Standard	(✓) YES ( ) NO
	Review history data from Certificates and incorporate into current PM: - Pull Test Certificates (ongoing update, 4 yr. history). - Load Test Certificates (ongoing update, 4 yr. history). - Wire Rope Certifications (running rope and standing rope) (life of rope). - Hoist Certifications for hoist classified as "personnel handling" hoist.		API RP 2D	(✓) YES ( ) NO
	Review Last Preventative Maintenance Records (Inspection Reports) - Pre-use (Pre-Post Inspection) - 6 Monthly (API RP 2D Not Defined, Company Standard) - 1 Yearly (API RP 2D Defined Annual Inspection)		API RP 2D	(✓) YES ( ) NO
Lifting Gear Preparation	Visually Inspect (Sling, sling hooks and shackles) include Webbing / Chain		Company Spec/Standard	(✓) YES ( ) NO
	Check color code / Tag & date inspection		Company Spec/Standard	(✓) YES ( ) NO
General	Determine if access route to-from crane is clean, safe, unobstructed and adequately protected against falls, tripping and slipping		Company Spec/Standard	(✓) YES ( ) NO
	Check drain lines and drip pans for deterioration		API RP 2D	(✓) YES ( ) NO
	Remove any sediment collected in the bottom of drip pans		Industry Standard	(✓) YES ( ) NO
	Check for general crane and components for loss of protective coating and corrosion		Industry Standard	(✓) YES ( ) NO
	Check for missing or loose ,corrosion, deformation pins, pin keepers, bolts, nuts, fasteners of all laders, cages and working platform		API RP 2D	(✓) YES ( ) NO
	Apply grease to exposed grease parts (control valve spools, ball-ring gear, parking brake valve, etc.)		OEM Manual	(✓) YES ( ) NO
Prime Mover	Engine Caterpillar		OEM Manual	(✓) YES ( ) NO
	CATERPILLAR MODEL 3406	S/N.:	OEM Manual	6TB2190
		AR.No.:	OEM Manual	1N3793
	Change engine lube oil & oil filter and check the condition of old oil. As found ;		OEM Manual	(✓) YES ( ) NO
	Check diesel tank level, top up if required.		OEM Manual	(✓) YES ( ) NO
	Check / Clean crankcase breather cap. Change if required		OEM Manual	(✓) YES ( ) NO
	Check / Clean air cleaner filter, Replace if require. (Note : Include inspect air cleaner housing)		OEM Manual	(✓) YES ( ) NO
	Check condition and inspect of the radiator and cap.		OEM Manual	(✓) YES ( ) NO
	Check for any signs of leaks on or around the engine ie; Crankshaft seal for front & rear seal , Engine oil cooler. As found;		OEM Manual	(✓) YES ( ) NO
	Check condition exhaust system for leaks, corrosion, insulation and general. As found ;		OEM Manual	(✓) YES ( ) NO
	Check condition of all engie hoses and tube. (Fuel supply,Cooling system and Lube oil system. As found;		OEM Manual	(✓) YES ( ) NO
	Drain water and sediment form diesel tank. As found ;		OEM Manual	(✓) YES ( ) NO
	Check / Clean Diesel tank level sightglass and diesel tag.		OEM Manual	(✓) YES ( ) NO
	Apply grease of fan bearing/shaft.		OEM Manual	(✓) YES ( ) NO
	Check and inspect the vibration damper and pulley. As found ;		OEM Manual	(✓) YES ( ) NO
	Change water coolant and check condition base of water coolant and record PH.		OEM Manual	(✓) YES ( ) NO
	COOLANT PARAMETERS (PH):	6 or higher	OEM Manual	PH = 7
	HOUR METER PARAMETERS:	LAST READING 4178 HRS	OEM Manual	4236 HRS
	Check and retigthen the bolts of all engine base. / Inspection mouting rubber. As found ;		OEM Manual	(✓) YES ( ) NO

SYSTEM	TASK			Specification	Record/Reading
	Inspect the engine fan blades that there is a break is it severely distorted or rusted. As found ;.....			OEM Manual	(✓) YES ( ) NO
	Change and adjust the tension engine belts. Remark; To check belt Tension, after has engine run more than 30 minules apply 400 N (90 lbs) of force midway between the pulleys. Correctly adjusted belts with deflect 13 to 19 mm (1/2 to 3/4 inch).			OEM Manual	(✓) YES ( ) NO
	Check engine HYD starter drive gear bendix and fly wheel gear teeth condition and record. **Replace if required"			OEM Manual	(✓) YES ( ) NO Bendix Gear : 95 % Fly wheel Gear teeth : 95 %
	Check and inspect condition the Bendix of hydraulic Starter motor.			OEM Manual	(✓) YES ( ) NO
	Lubricate and check engine throttle system.			OEM Manual	(✓) YES ( ) NO
	Determine if the tachometer operates properly: Record Value of Idle & Max Speed (RPMs) Note: Too low Idle (RPMS) will cause excessive worn at winch brake			OEM Manual	
	ENGINE RPM SPECIFIC	IDLE SPEED	850-950 RPM	OEM Manual	850 RPM
		MAX SPEED	2200 RPM	OEM Manual	2200 RPM
	Confirm engine oil pressure as per Parameters below and Record Value:			OEM Manual	
	ENGINE OIL PRESSURE SPECIFIC	Minimum	Not lower then 30 PSI	OEM Manual	40 PSI
		Maximum	70 PSI	OEM Manual	60 PSI
	Confirm engine fuel pressure Parameters are correct and Record Value:			OEM Manual	
	ENGINE FUEL PRESSURE SPECIFIC** **Note;Fuel pressure at high idle is lower than 105 kPa (15 psi)RAMETERS	Normal	>35 PSI.	OEM Manual	(✓) YES ( ) NO
	Confirm engine temperature Parameters and Record Value:			OEM Manual	
	ENGINE WATER TEMP SPECIFIC	NORMAL	120 - 180 degrees F	OEM Manual	165 F
	Test engine SAFETY DEVICE- ensure engine kill cable shuts off FUEL supply			API RP 2D	(✓) Function ( ) False
	Test engine SAFETY DEVICE- ensure EMERGENCY KILL CABLE - shuts off AIR supply			API RP 2D	(✓) Function ( ) False
	Test engine SAFETY DEVICE- ensure ENGINE low lube oil - releases OIL PRESSURE to ~~activate Alarm Air System~~ Trip ***Note*** Engine oil pressure low alarm at 20 PSI			Company Spec/Standard	(✓) Function ( ) False
	Test engine SAFETY DEVICE- ensure HIGH TEMP - releases OIL PRESSURE to ~~activate Alarm Air System~~ Trip			Company Spec/Standard	(✓) Function ( ) False
	Change water separator filter.			OEM Manual	(✓) YES ( ) NO
	Check the general conditionand functioning of turbocharger. Note;			OEM Manual	( ) Leak (✓) Not Leak
	Change fuel filter and inspect the primary hand pump.			OEM Manual	(✓) YES ( ) NO
	Check water temperator regulator.(Thermostat). Change if require refer from cooling temperature.			OEM Manual	(✓) YES ( ) NO
	Check general condition the Governor and control linkage. (Inspect the throtle linkage)			OEM Manual	(✓) YES ( ) NO
	Check or adjust the engine valve lash and bridge valve. (Intake vale = 0.015", Exhaust valve = 0.030")			OEM Manual	(✓) YES ( ) NO
	Check condition wear of pump drive spline and record **Note; Remaining 70% of Original Spline Surface must be replace.			Company Spec/Standard	80 % Remaining
	Check condition wear of adaptor Coulping spline shaft and record **Note; Remaining 70% of Original adaptor Coulping spline shaft Surface must be replace.			Company Spec/Standard	80 % Remaining
	Check condition wear of Coulping spline and record. Re-tigthen of all lock bolts. **Note; Remaining 70% of Original adaptor Coulping spline shaft Surface must be replace.			Company Spec/Standard	90 % Remaining
Hydraulic Start System (Apply for C2-Remote P/F Only)	Check pressure system at the pressure gauge which should reach 3,000 PSI as standard when the system is FULLY charged. Record Value. (As the system cools down, the pressure should drop slightly and finally stabilised.)			OEM Manual	(✓) YES ( ) NO
	Visually inspect all hydraulic connections and hoses for leaks and retighten if necessary. (Caution: This should NOT be done if the system is under pressure.) 1. Slowly release system pressure by loosening the bleed screw on top of the hand pump. 2. Ensure no pressure remains, retighten the suspected leak fitting or replace the damaged hose or component. 3. Retighten the bleed screw on the hand pump. 4. Pump the system up to 2200 - 2600 PSI 5. Inspect that the leak was eliminated.			OEM Manual	(✓) YES ( ) NO
	Function check Accumulator Pre-charge. (Caution: This should NOT be done if the system is under pressure.) 1. Shut the engine off, release system pressure via the bleed screw on top of the hand pump 2. Retighten bleed screw and actuate the hand pump. The pressure will rapidly increase and then stabilised. This pressure is related to accumulator gas pre-charge pressure. 4. If the pressure rapidly increase to 3000 PSI, it indicates that the accumulator has lost its gas charge. 5. Troubleshoot as necessary			OEM Manual	(✓) YES ( ) NO
	Check function rechaging system by function boom down while the engine running. 1. The crane engine is running at 1,000-1500 RPM. 2. Slowly control lever boom function down for charging pressure to accumulator. 3. This pressure should read on prssure gauge between 2200 - 2600 PSI depending on the recharge ratio 80% std. (90% optional). Record Pressure Value.			OEM Manual	2500 PSI
	Check Nitrogen pressure in Accumulator ***Note**spec @ 1,500 psi as follow schematic and if found pressure loss below 1400 PSI then prepare recharge nitrogen in system			OEM Manual	1500 PSI
	Every 36 months or 2000 engine running hours (approximately 1500 starts) replace the high pressure filter.			OEM Manual	(✓) YES ( ) NO
Hoist / Brakes	Visually check a hoist exhibits erratic operation and/or unusual noise, the hoist must be taken out of service until it is inspected and serviced by a qualified technician. Continued operation of a hoist with a defect in a critical component may lead to loss of load control, property damage, serious injury or death.			OEM Manual	(✓) YES ( ) NO
	Visual exteriors of hoist, frames, drums and flanges for damage, leaks, cracks and wear and repair/replace as required to maintain the structural integrity of the hoist.			OEM Manual	(✓) YES ( ) NO
	Check all hoist mounting pins, bolts or other fasteners and replace or tighten as necessary.			OEM Manual	(✓) YES ( ) NO
	Lubricant level must be maintained between the minimum and maximum levels; midway up sight glass or at bottom of level plug port as equipped and check/clean plug vent. Use only the recommended type of lubricant.			OEM Manual	(✓) YES ( ) NO
	Inspect Brake Valve Opening Pressure test V/V 1-1/4" PD Series : no lower than 550 PSI V/V 1-1/2" CH Series : no lower than 575 PSI	Main		Braden Bulletin 527-Dec,1996	600 PSI
		Aux			600 PSI
	Inspect Brake cylinder opening pressure test. CH/PD Series : 400-450 PSI.	Main		Industry Standard	450 PSI
		Aux			450 PSI
	Measure differancian of static and dynamic brake. CH/PD Series : 150-250 PSI.	Main		Industry Standard	150 PSI
		Aux			150 PSI
	Check for external oil leaks and repair as necessary. This is extremely important due to the accelerated wear that will result from insufficient lubricating oil in the hoist.			OEM Manual	(✓) YES ( ) NO
	RECORD BOOM CYLINDER INFORMATION :	Boom cylinder Diameter:		OEM Manual	DIA: 12 Inch
		CY Number:		OEM Manual	L= 6169 R= 6169
		Serial Number:		OEM Manual	L= 5231 R= 5233
	RECORD MAIN HOIST INFORMATION :	Manufacturer:		OEM Manual	Braden

SYSTEM	TASK			Specification	Record/Reading
			Model:	OEM Manual	CH210A-30120-02-1
			Serial Number:	OEM Manual	0300919
	Check MAIN HOIST for proper operation and good condition			API RP 2D	(✓) YES ( ) NO
	Brake test & record pressure of MAIN HOIST.			OEM Manual	(✓) YES ( ) NO As found.....
	Change main hoist gear oil and inspect for small particles in the old oil. ** Refer to Onsite Gear Oil Sample Procedure ** ** Replace and send oil sample to SKL if abnormal ** ** Take photo of Oil Sampling for Reference**			OEM Manual	(✓) YES ( ) NO As found.....
	RECORD AUXILIARY HOIST INFORMATION :		Manufacturer:	OEM Manual	Braden
			Model:	OEM Manual	CH150A-23110-01-1
			Serial Number:	OEM Manual	0301986
	Check AUXILIARY HOIST for proper operation and good condition			API RP 2D	(✓) YES ( ) NO
	Brake test & record pressure of AUXILIARY HOIST			API RP 2D	(✓) YES ( ) NO
	Change Aux. hoist gear oil and inspect for small particles in the old oil. ** Refer to Onsite Gear Oil Sample Procedure ** ** Replace and send oil sample to SKL if abnormal ** ** Take photo of Oil Sampling for Reference** Please record if any abnormal condition. Note.....			OEM Manual	( ) SEND SKL LAB (✓) NOT SEND SKL LAB
	Check pressre relief Valve: Determine hoistes' relief valve pressure gauge is working and giving accurate measurement by notice whether pressure gauge is vibrating or not. If not, set relief valve pressure in accordance with the schematic and parameters below. Record all readings.			OEM Manual	(✓) YES ( ) NO
	BOOM RELIEF VALVE TEST	Relief Specific:	3,000 PSI	OEM Manual	3000 PSI
	MAIN HOIST RELIEF VALVE TEST	Relief Specific:	2,575 PSI	OEM Manual	2575 PSI
	AUX HOIST RELIEF VALVE TEST	Relief Specific:	2,800 PSI	OEM Manual	2800 PSI
	SWING RELIEF VALVE TEST	Relief Specific:	1,500 PSI	OEM Manual	1500 PSI
	Measure Pressure of hoist motor case drains and Record Value Reference Bulletin: BRADEN Inspection, Testing, Preventive Maintenance and Special Operating Instructions For Planetary Hoists PB-308 latest edition for further details.			OEM Manual	
	MAIN HOIST CASE DRAIN for Gear Motor (Down Mode).	PRESSURE	< 100 psi	Company Spec/Standard	10 PSI
	AUX. HOIST CASE DRAIN for Gear Motor (Down Mode).	PRESSURE	< 100 psi	Company Spec/Standard	20 PSI
Hydraulic System	Check hydraulic tank oil level. Oil should be visible in the sight glass. Top up as required (3/4 Tank Minimum)			OEM Manual	(✓) YES ( ) NO
	Check hydraulic oil condition. (Check if running hours are more than 100 hours from last oil change or during Annual inspection) ** Refer to Onsite Hydraulic Oil Sample Procedure ** ** Replace and send oil sample to SKL if abnormal ** ** Take photo of Oil Sampling for Reference**		Rando HD-68	Company Spec/Standard	( ) SEND SKL LAB (✓) NOT SEND SKL LAB
	Inspect hydraulic tank and strainer filter. Change hydraulic oil, if required with lab confirmation.			Company Spec/Standard	(✓) YES ( ) NO
	Drain off 1 liter of oil to remove condensed water. If water is present, drain until water is removed and top up with clean oil			Industry Standard	(✓) YES ( ) NO
	Check for any hydraulic leaks			Industry Standard	(✓) YES ( ) NO
	Check the hydraulic hose, piping and tubing for mechanical damage, corrosion, splits, blisters, cracking or excessive abrasion on the outer surface			API RP 2D	(✓) YES ( ) NO
	Check that all hydraulic hose connections are sound and that all mounting and pivoting connections are secure.			Industry Standard	(✓) YES ( ) NO
	Lubricate hydraulic swivel in pedestal and insure tie down restrains are in place and preventing the swivel from rotating with the crane structure.			OEM Manual	(✓) YES ( ) NO
	Ensure the filler breather on tank is not covered or clogged			Industry Standard	(✓) YES ( ) NO
	Visually inspect for missing or loose pins, pin keepers, bolts, nuts, fasteners on all pumps, motors and valves			API RP 2D	(✓) YES ( ) NO
	* Re-tighten the stud bolt of hydraulic main pump and marking the nut for checking to prevent loosening. Note : Torqe spec model P76, P75, PGP/PGM350 ,PGP/PGM330 = 200 ft-lbs. , for model PGP/PGM315 = 140 ft-lbs. and PGP/PGM365 = 450 ft-lbs.			The Commercial Intertech manual	(✓) YES ( ) NO
	Check the filter bypass indicator, while engine is running			OEM Manual	(✓) YES ( ) NO
	With engine running (after all other items pass inspection), check the system for leaks around fittings, hoses, valves and reservoirs			Industry Standard	(✓) YES ( ) NO
	With engine running, check the source of any unusual noise or vibration that may cause or indicate equipment damage or wear			Industry Standard	(✓) YES ( ) NO
	Ensure all hoses are properly rated for the system, see "Parameters" for each system for details.			Industry Standard	(✓) YES ( ) NO
	Record hydraulic oil operating temperture. Note: Hydraulic fluid overheating temperature is over 180 F degrees or 82 C, degrees (reservoir temperature)			Industry Standard	130 Degree F
	Determine if hydraulic return pressure gauge is working and giving accurate measurements. Record readings				
	RECORD HYDRAULIC RETURN PRESSURE PARAMETERS:		60 PSI "maximum"	OEM Manual	10 PSI
	Check and inspect the hydraulic return filters and seals.			OEM Manual	(✓) YES ( ) NO
	Function Testing and record pressures with engine at :		2,200 RPM	API RP 2D	
	BOOM FUNCTION TEST (Need Crane Mech to verify each platform)			OEM Manual	
	Boom Angle : 60 Degree (Recommend or as applicable) — UP	Cracking pressure	RECORD	OEM Manual	500 PSI
		Full Speed Pressure	RECORD	OEM Manual	700 PSI
	DOWN	Cracking pressure	RECORD	OEM Manual	600 PSI
		Full Speed Pressure	RECORD	OEM Manual	1500 PSI
	MAIN HOIST FUNCTION TEST (Need Crane Mech to verify each platform)			OEM Manual	
	Boom Angle : 60 Degree (Recommend or as applicable) — UP	Cracking pressure	RECORD	OEM Manual	100 PSI
		Full Speed Pressure	RECORD	OEM Manual	500 PSI
	DOWN	Cracking pressure	RECORD	OEM Manual	600 PSI
		Full Speed Pressure	RECORD	OEM Manual	1400 PSI
	AUX HOIST FUNCTION TEST (Need Crane Mech to verify each platform)			OEM Manual	
	Boom Angle : 60 Degree (Recommend or as applicable) — UP	Cracking pressure	RECORD	OEM Manual	400 PSI
		Full Speed Pressure	RECORD	OEM Manual	500 PSI
	DOWN	Cracking pressure	RECORD	OEM Manual	600 PSI
		Full Speed Pressure	RECORD	OEM Manual	1000 PSI

SYSTEM	TASK				Specification	Record/Reading
	SWING FUNCTION TEST (Need Crane Mech to verify each platform)				OEM Manual	
	Boom Angle : 60 Degree (Recommend or as applicable)	LEFT	Cracking pressure	RECORD	OEM Manual	200 PSI
			Full Speed Pressure	RECORD	OEM Manual	600 PSI
		RIGHT	Cracking pressure	RECORD	OEM Manual	200 PSI
			Full Speed Pressure	RECORD	OEM Manual	600 PSI
Electrical system, Crane Boom Lighting and red obstruction light	Check the electrical junction boxes, wires and connections for deterioration, desiccant bags, (replace as required)				Industry Standard	(✓) YES ( ) NO
	Check the condition of the grounding and lighting protection system.				Company Spec/Standard	(✓) YES ( ) NO
	Visually inspect boom floodlight and light guards for loose, missing, corroded				Company Spec/Standard	(✓) YES ( ) NO
	Check condition pipe support , U-bolt ,nuts of boom floodlight and Electric slipring for loose , missing , corroded				Company Spec/Standard	(✓) YES ( ) NO
	Check Electric slipring/swivel for 360° continuous rotation				OEM Munnal	(✓) YES ( ) NO
	Check Water ingress, condensation in electric slipring, red obstruction light and boom floodlight				OEM Munnal	(✓) YES ( ) NO
	Check feely movement and lubricate of boom floodlight				OEM Munnal	(✓) YES ( ) NO
	With generator in operation, Intergize all lights to unsure proper function.				API RP 2D	(✓) YES ( ) NO
	Check condition of crane boom lighting and safety net is secured with strong point. * **Safety net should be replace 24 months after installation (2 year)***			Last installation date _____	Company Spec/Standard	(✓) YES ( ) NO
	Check function of crane sound signal				Company Spec/Standard	(✓) YES ( ) NO ( ) N/A
	Check function of crane boom lighting at boom upper section				Company Spec/Standard	(✓) YES ( ) NO ( ) N/A
	Check function of crane boom lighting at boom lower section				Company Spec/Standard	(✓) YES ( ) NO ( ) N/A
	Check function of crane boom lighting at winch skid				Company Spec/Standard	( ) YES ( ) NO (✓) N/A
	Check function of crane boom lighting at crane cabin				Company Spec/Standard	(✓) YES ( ) NO ( ) N/A
	Check function becon light at boom tip				Company Spec/Standard	(✓) YES ( ) NO ( ) N/A
	Inspection wire rope guide & Roller assembly				Company Spec/Standard	(✓) YES ( ) NO
	Visually inspect red obstruction light pipe support, u-bolts, nuts connection to hand rail for loose, missing, corroded				Company Spec/Standard	(✓) YES ( ) NO
	Visually inspect safety sling attached to the red obsruction light and its base for loose, missing, corroded				Company Spec/Standard	(✓) YES ( ) NO
	Visually inspect red obstruction light function. The light is designed to turn on all the time.				Company Spec/Standard	(✓) YES ( ) NO
Operator Control Station	Check general condition of control panel, bolts, paint security, etc.				API RP 2D	(✓) YES ( ) NO
	Determine if there is a serviceable fire extinguisher in the vicinity of the crane				Company Spec/Standard	(✓) YES ( ) NO
	Determine if correct load chart is in use and easily visible for operator				API RP 2D	(✓) YES ( ) NO
	Determine if charts, indicators and hand signal chart are in the cabling and firmly attached				API RP 2D	(✓) YES ( ) NO
	Determine if angle/radius indicator plate is easily visible to operator and is moving freely.				API RP 2D	(✓) YES ( ) NO
	Check condition of control levers and determine if they "dead-man" back to the neutral position.				API RP 2D	(✓) YES ( ) NO
	Check condition of pressure gauges.				API RP 2D	(✓) YES ( ) NO
	Check proper control labels are firmly installed, completely legible and properly labeled				API RP 2D	(✓) YES ( ) NO
	Check controls for freedom-of-movement				API RP 2D	(✓) YES ( ) NO
	Check condition , Leak, freely moement of Dynamic swing break system *** Note; if HYD Oil loose in CYD reservoir must be refill*				OEM Manual	(✓) YES ( ) NO
	Check condition , Leak, freely moement of Accelerate System *** Note; if HYD Oil loose in CYD reservoir must be refill*				OEM Manual	(✓) YES ( ) NO
	Check all safety glass and rubber seal for proper condition				API RP 2D	(✓) YES ( ) NO ( ) N/A
	Function Test Horn. Note;.....				Industry Standard	(✓) YES ( ) NO ( ) N/A
	Ensure PRE/POST Check List and Pocket Manual in the cabin. Note;.....				Company Standard	(✓) YES ( ) NO ( ) N/A
Load Indicator System	Visual check on fittings and connections for leaks. Fix leak if any. Note:.....				OEM Manual	(✓) YES ( ) NO
	Should any leaks exist, stop leak and recharge system, refer to maintenance manual				OEM Manual	(✓) YES ( ) NO
	Change and flushing Load cell fluid.				OEM Manual	(✓) YES ( ) NO
	Check general condition of tubbing, hoses, pins bolts, paint, etc.				Industry Standard	(✓) YES ( ) NO
	Insure load cell is free of obstructions				OEM Manual	(✓) YES ( ) NO
	Check condition of gauge(s) face and clean glass as required.				OEM Manual	(✓) YES ( ) NO
	Check the scale's operation and weighing accuracy. (Main Hoist) Remark : Maximum variance +/- 2% Note;.....				Company Spec/Standard	(✓) YES ( ) NO ( ) N/A
	Check the scale's operation and weighing accuracy. (Aux. Hoist) Remark : Maximum variance +/- 2% Note;.....				Company Spec/Standard	(✓) YES ( ) NO ( ) N/A
	Check the internal casting fluid of weight indicator. top up if required				Industry Standard	(✓) YES ( ) NO ( ) N/A
	Insure SWL tag matches ratings on the Crane Load Chart.				OEM Manual	(✓) YES ( ) NO ( ) N/A
	Insure Boom Length, matches the Crane Load Chart				OEM Manual	(✓) YES ( ) NO ( ) N/A
	Insure Boom Angle measurements and readings match the boom angle indicator.				OEM Manual	(✓) YES ( ) NO ( ) N/A
	Insure Boom Radius measurements indicate the distance from center line of the crane to the hook				OEM Manual	(✓) YES ( ) NO ( ) N/A
	Check Main load cell gap 1/4 (0.250) inch				OEM Manual	(✓) YES ( ) NO ( ) N/A
	Check Aux load cell gap 3/8(0.380) inch (Compression Load Cell Type)				OEM Manual	(✓) YES ( ) NO ( ) N/A
Pedestal & Structure	Visually check Pedestal for chipped/cracked paint, deformation, worn parts, dents, corroded areas, cracks weld, etc.				API RP 2D	(✓) YES ( ) NO
	Check water rain drain at pedestal must be not obstuct				Industry Standard	(✓) YES ( ) NO
	Check pin and cotter pin of pedestal missing , corrosion, wear, damage and exercise pin.				Industry Standard	(✓) YES ( ) NO
	Visually check Base - Plate connection and Base hoist Structure for chipped/cracked paint, deformation, worn parts, dents, corroded areas, cracks weld, etc.				API RP 2D	(✓) YES ( ) NO
	Check A fixed such as Handrial, Walkway, Grating, stationary structure without significant movement in response to waves and currents in normal operating conditions.				API RP 2C	(✓) YES ( ) NO
	Visually check and lubricate maintenance Jib. ***Note*** If on pedestal crane				OEM Manual	(✓) YES ( ) NO ( ) N/A
	Check maintenance jib is secure firmly. ***Note*** If on pedestal crane				OEM Manual	(✓) YES ( ) NO ( ) N/A
Box Boom & Luffing CYD	Check and Verify entire box boom and Boom CYD for loss of protective coating and corrosion. Note;.....				API RP 2D	(✓) YES ( ) NO
	Check and Verify entire box boom and Boom CYD for chipped/cracked paint, deformation, worn parts, dents, corroded areas, cracks, etc. Note;.....				API RP 2D	(✓) YES ( ) NO
	Check and Verify boom end connections, for bends, dents, corroded areas, cracked welds, and signs of mechanical damage, wear, etc. **any deviation should be reported**				API RP 2D	(✓) YES ( ) NO
	Check and Verify boom rest and wooden support to ensure it's in good condition				API RP 2D	(✓) YES ( ) NO

SYSTEM	TASK	Specification	Record/Reading
	Inspect pin and pin holes of Upper tank and Lower tank for excessive clearance	OEM Manual	(✓) YES ( ) NO
	BOOM CYLINDER PIN MAXIMUM TOLERANCE — 0.125 Inch (3mm)	Industry Standard	As found.....
	Check BOOM CYLINDERS for proper operation and good condition	API RP 2D	(✓) YES ( ) NO
	Check Boom cylinder barrels and rods for leaks, mechanical damage and corrosion	Industry Standard	(✓) YES ( ) NO
	Check and measurement boom foot pin and connection pins for clearance	Industry Standard	
	BOOM FOOT PINS & BOOM BOX CONNECTER PIN TOLERANCE — 0.125 Inch (3mm)	Industry Standard	
	Boom Foot Pin Tolerance	Industry Standard	0.030 inch
	Boom Box Connecter Pin Tolerance	Industry Standard	0.025 inch
	Check connecting bolts of box boom loose, corrosion, wear, damage	OEM Manual	(✓) YES ( ) NO
	Lubricate boom foot pins and bushings	OEM Manual	(✓) YES ( ) NO
	Lubricate boom cylinder pins, bearings and bushings	OEM Manual	(✓) YES ( ) NO
	Boom function test angle/radius to correction **Note; The cylinder(s) mechanism shall be capable of elevating the boom from a minimum of zero degrees to the maximum recommended boom angle.	API RP 2C	(✓) YES ( ) NO
	Operation functional test and verify Boom Creeping down **Note ; Test at angle 60 °	Industry Standard	(✓) YES ( ) NO As found.....
Wire Rope	Determine if parts-of-line match parts of line on the load chart in the crane cabin.	API RP 2D	(✓) YES ( ) NO
	Determine if visible portion of wire rope adequately lubricated. If not lubricate wire rope	API RP 2D	(✓) YES ( ) NO
	For each layer of wire rope on drum, check that all rope is parallel and each crossover point at hoist flanges is correct	API RP 2D	(✓) YES ( ) NO
	The top layer of rope must not be lower to the flange tips 2.5 in for Smooth drum,2 in for groove drum or 2.5 times of wire rope diameter	API RP 2C	(✓) YES ( ) NO
	Inspect wire rope for, kinking, crushing, broken wires, necking down of rope diameter, worn outside wires, corroded or broken wires at end connection, cutting or unstringing.	API RP 2D	(✓) YES ( ) NO As found.....
	NoteRunning Ropes of rotation-resistant construction used in the main or auxiliary Hoist: - Four (4) Randomly distributed broken wires within 30 rope diameter - Two (2) broken wires in one stand within 6 rope diameter	API RP2D Edition 7	(✓) YES ( ) NO As found.....
	One valley break can indicate internal rope damage requiring close inspection of this section of the rope. When one or more valley breaks are found in one lay length the rope should be retired.	API RP2D Edition 7	(✓) YES ( ) NO As found.....
	Reductions for the rope diameter, from initial wire rope dimensional measurements, in a nonworking area (an area away from the sheaves) compared to the lowest diameter of rope measured in three working areas (areas where the rope regularly goes over a sheave) of more than the following is observed: — 3/64 in. (0.047 in.) (1.2 mm) for diameters up to and including 3/4 in. (19.1 mm); — 1/16 in. (0.062 in.) (1.6 mm) for diameters of 7/8 in. to 1-1/8 in. (22.2 mm to 28.6 mm); — 3/32 in. (0.093 in.) (0.8 mm) for diameter of 1-1/4 in. to 1-1/2 in. (31.8 mm to 38.1 mm); — For rope diameters greater than 1-1/2 in., a 5 % diameter loss from baseline measurement. —Wear of one-third the original diameter of the outside individual wires.	API RP2D Edition 7	(✓) YES ( ) NO As found dimension.....
	Increase in the length of an individual rope lay is observed. This increase in lay length and accompanying reduction in diameter can be caused by failure of the core. This can occur more readily in ropes or rotation-resistant construction.	API RP2D Edition 7	(✓) YES ( ) NO As found.....
	-Inspection and Verify running and standing rope from heat effect **Note; Not more than 250°C -There is evidence of heat damage from any source (i.e. engine exhaust, flare towers, stress corrosion cracking, etc.). Heat can be generated by passing a rope over a frozen or non-turning sheave, contact with structural members of the crane, improperly grounded welding leads or lightning strikes	Industry Standard	(✓) YES ( ) NO As found.....
	With the boom at the highest possible angle and the main load block or overhaul ball at the water level, ensure there is a minimum of 5 wraps of wire-rope remaining on the drums. Note: (Thai law, requires minimum of 2 wraps)	API SPEC 2C / Thai Law	(✓) YES ( ) NO
	Reference: - Running rope safety factor not less than 6 for wire rope that are running wire, (Thai law; Wire rope nominal breaking strength x number parts of line / Design factor 6) - Standing rope safety factor not less than 3.5 for wire rope that are stay cables, (Thai law)	Thai Law	(✓) YES ( ) NO ( ) N/A
	Measure and record nominal diameter of "running ropes"main and auxiliary (particularly on drum, equalizer sheave and at sockets, clips and dead end points) *****Nominal = several measurements added together divided by Number of measurements*****	API RP 2D	(✓) YES ( ) NO
	Inspect wire rope and record dimension.	API RP 2D	
	MAIN WIRE ROPE OD: — FULL DRUM	OEM Manual	0.710 inch
	MAIN WIRE ROPE OD: — HALF DRUM	OEM Manual	0.712 inch
	MAIN WIRE ROPE OD: — WATER LEVEL	OEM Manual	0.705 inch
	AUX WIRE ROPE OD: — FULL DRUM	OEM Manual	0.570 inch
	AUX WIRE ROPE OD: — HALF DRUM	OEM Manual	0.565 inch
	AUX WIRE ROPE OD: — WATER LEVEL	OEM Manual	0.566 inch
	Slip-Cut 1 meter of all ropes at the wedge socket and re-wedge to prevent rust inside of wedge socket (at outward end of rope, not on hoist drum) Dead end tail length is never less than 6 inches, or: - Standard 6 to 8 Strand wire rope is not less than 7 times the rope diameter - Rotation Resistant Wire Rope is not less than 20 times the rope diameter	Company Spec/Standard	(✓) YES ( ) NO
	U-bolt and Fist Grip Clips: Extreme care should be exercised to assure proper orientation of U-bolt clips. The U-bolt segment shall be in contact with the wire rope dead-end. The orientation, spacing, torquing, and number of all clips shall be in accordance with the crane manufacture's specifications.	API SPEC 2C	(✓) YES ( ) NO
	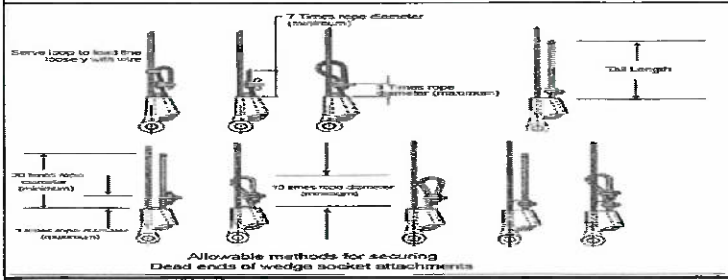	API SPEC 2C	Model ans Size wedge socket. Main hoist. Model..... Size.....3/4..... Aux.Hoist. Model..... Size.....3/4.....
	Verify that the wedge socket and wedge are the correct size for the rope in use and record the size	API SPEC 2C	(✓) YES ( ) NO
Sheaves & Bearings	Lubricate all sheave bearings.	API RP 2D	(✓) YES ( ) NO
	Visually inspect all sheaves and bushings for cracks, wear and deterioration	API RP 2D	(✓) YES ( ) NO As found.....

SYSTEM	TASK	Specification	Record/Reading
	Visually inspect wire rope track of sheave for rope imprints, wear and deterioration. If damage exist sheave should be resurfaced or replaced.	API RP 2D	(✓) YES ( ) NO As found.....
	Pins retained by snap rings, bolt lock shafts, plates lock should be checked for missing or loose for all	API RP 2D	(✓) YES ( ) NO
	Check wirerope guards and keepers for proper location and condition.	API RP 2D	(✓) YES ( ) NO
	Determine if wire rope is jumping the sheaves, by looking for signs of damage on the sheave brim	Industry Standard	(✓) YES ( ) NO
	Sheave Rope Profile for optimum Rope life the sheave groove profile should be correctly matched to the rope diameter	Industry Standard	(✓) YES ( ) NO
	Check rope sheave should be machine grooved to adepth of not less than 1.5 times the norminal diameter of the rope	Industry Standard	(✓) YES ( ) NO
	MAIN POINT SHEAVES: Note;.....	Industry Standard	No.1 (✓) YES ( ) NO No.2 (✓) YES ( ) NO
	AUX SHEAVES: Note;.....	Industry Standard	No.1 (✓) YES ( ) NO
	IDLER SHEAVES: Note;.....	Industry Standard	AUX. (✓) YES ( ) NO Main (✓) YES ( ) NO
	Pins for bronze bushing and straight roller bearing should have a running clearnace of .031 inch/ sheave of end play and should be adjusted accordingly.(count from left)	Industry Standard	(✓) YES ( ) NO
	MAIN POINT SHEAVES:	Industry Standard	Sheave No.1....0.10.... inch Sheave No.2....0.12.... inch
	AUX SHEAVES:	Industry Standard	Sheave No.1....0.15.... inch
	IDLER SHEAVES:	Industry Standard	Sheave AUX....0.12.... inch. Sheave Main....0.12.... inch.
	Ensure the sheaves are aligned and the fleet angle is correct **Remark ; Wire rope User's Manual allows 2 degree on grooved winch drum, Smooth Drum shuold be not more than 1-1/2 degree	API RP 2D	(✓) YES ( ) NO
	Determine if wire rope size and sheave sizes/grooves are compatible and record size. Sheave pitch diameter (D) to nominal wire rope diameter (d) ratio (D/d) shall not be less than 18:1	API SPEC 2C	(✓) YES ( ) NO
	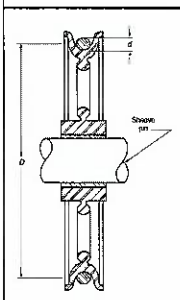 MAIN POINT SHEAVES: SHEAVE D / WIRE ROPE d = >18	API SPEC 2C	18 inch (D) 0.75 inch (d) 24 (Ratio D/d)
	AUX SHEAVES: SHEAVE D / WIRE ROPE d = >18	API SPEC 2C	14 inch (D) 0.75 inch (d) 18 (Ratio D/d)
	IDLER SHEAVES: SHEAVE D / WIRE ROPE d = > 18 (If applicable)	API SPEC 2C	18 inch (D) 0.75 inch (d) 24 (Ratio D/d)
	MAIN BLOCK SHEAVES: SHEAVE D / WIRE ROPE d = > 16	API SPEC 2C	16 inch (D) 0.75 inch (d) 21 (Ratio D/d)
Load Block	**Load Block:** Check the load block for cleanliness, binding sheaves, damaged or worn sheaves, worn or distorted sheave pins, broken bolts, and worn cheek weights. Note ;.....	Industry Standard	(✓) YES ( ) NO As found.....
	Hook: Check the hook damage, excessive wear to the hook safety latch, hook swivel trunnions, thrust collar, securing, damage or missing lubrication fittings, proper lubrication, cracks and gouges, and if visibly bent or twisted or has been exposed to welding or arching. Note ;.....	Industry Standard	(✓) YES ( ) NO As found.....
	Hook: Tip has been bent more than 10 degree out of plane from the hook body	Industry Standard/API RP2D7	(✓) YES ( ) NO As found.....
	Inspect the Pins for bronze bushing and straight roller bearing should have a running clearnace of .031 inch/ sheave of end play and should be adjusted accordingly	Industry Standard	(✓) YES ( ) NO
	Inspect Hook or shackle to swivel case clearance is set at .031 to .062 inch, Clearance exceeding .12 to .18 (ONLY CROSBY BRAND)	OEM Crosby	(✓) YES ( ) NO
	OEM STANDARD RECOMMEND that Crane block removal from service untill replaced and repair following below	OEM STANDARD	
	- Elongated center pin and hook trunnion holes exceeding 5% of Original diameter	OEM STANDARD	(✓) YES ( ) NO As found.....
	-Material loss due to wear exceeding 10% of original section	OEM STANDARD	(✓) YES ( ) NO As found.....
	-Sheave wire rop groove diameter smaller than 2.5%	OEM STANDARD	(✓) YES ( ) NO As found.....
	Loosened tie bolts nuts, center pin round nuts, check weight cap screws and hook nut cap screws. Tie bolt nuts to be torqued to 35-40 ft.Lbs and restaked, all other fasteners wrench tight	OEM STANDARD	(✓) YES ( ) NO
	Throat opening - any distortion causeing an increase in throat opening of 5% not ot exceed 1/4 in. (6 mm.)(or as recommended by the manufacturer)	ASME B30.10	(✓) YES ( ) NO
	Inspect rope track worn in sheave groove, sheave must be resurface or replace	API RP 2D	(✓) YES ( ) NO
	Ensure the load block is not using "Cast Iron" cheek weights they can not be used as per API	API SPEC 2C	(✓) YES ( ) NO As found.....
	Determine if all hooks are equipped with properly operating safety latches and check for proper functioning	API RP 2D	(✓) YES ( ) NO
	Lubricate sheave bearings and swivels	OEM Manual	(✓) YES ( ) NO
	Re-thighten nut firmly to point at which trunion will just rotate, the Re-tighten set-screw in nut and thread condition as in the picture below,	Industry Standard	(✓) YES ( ) NO

SYSTEM	TASK		Specification	Record/Reading
	Last NDE inspection record		Industry Standard	Last inspect date_____
	RECORD LOAD BLOCK INFORMATION :	Manufacturer:	OEM Manual	McKissick
		Model:	OEM Manual	MB09T96H
		Serial Number:	OEM Manual	0.742136
	Record Load block measurements and details for future comparison with historical data ☒		Industry Standard	(✓) YES ( ) NO
	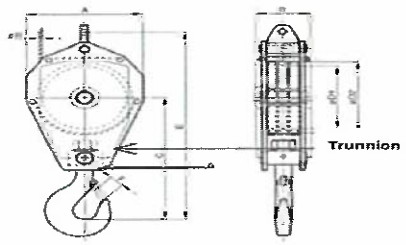	A - Block OD	Industry Standard	19.6 mm/ inch
		B - Block length	Industry Standard	14 mm/ inch
		C - Center of Pin to hook Saddle	Industry Standard	34 mm/ inch
		D1 - Sheave Diameter	Industry Standard	16 mm/ inch
		E - Block Width	Industry Standard	36.5 mm/ inch
		F - Throat Opening	Industry Standard	9 mm/ inch
		G - Trunnion	Industry Standard	0.015 mm/ inch
Auxiliary Ball	Inspect Auxiliary ball for cleanliness, binding swivel, work pad-eye hole. Inspect the hook damage, excessive wear to the hook safety latch, Bent connector plates,Severe corrosion pitting, hook swivel trunnions, thrust collar, securing, damage or missing lubrication fittings,Loose, missing or damaged retaining nuts, cotter pins or swivel set screws ,Missing or illegible rating and warning tags, proper lubrication, cracks and gouges, and if visibly bent or twisted or has been exposed to welding or arching.		Industry Standard	(✓) YES ( ) NO
	Hook: Tip has been bent more than 10 degree out of plane from the hook body		Industry Standard/API RP2D7	(✓) YES ( ) NO
	OEM STANDARD recommend that Crane overhaul ball removal from service untill replaced and repair following below		OEM STANDARD	
	- Elongated ball pin holes, hook latch pin holes and swivel eye exceeding 5% of original diameter,		OEM STANDARD	(✓) YES ( ) NO As found.....
	-Swivel end play gap exceeding .08". Excessive end play indicates damaged internal set screw		OEM STANDARD	(✓) YES ( ) NO As found.....
	-Material loss due to wear exceeding 10% of original section		OEM STANDARD	(✓) YES ( ) NO As found.....
	Throat opening - any distortion causeing an increase in throat opening of 5% not ot exceed 1/4 in. (6 mm.)(or as recommended by the manufacturer)		ASME B30.10	(✓) YES ( ) NO
	All hooks that lift personnel are to have a positive locking safety latch **locking Pin to be used while lifting personnel**		API RP 2D	(✓) YES ( ) NO
	*** Temperature Effected : When hooks are to be used at temperature above 400° F. (204°C) or below -40°F (-40°C), the hook manufacturer or a qualified person should be consulted *** Chemically Active Environment : The strength of hooks can be affected by chemically active environments, such as caustic or acid substances or fumes. The hook manufacturer or qualified person should be consulted before hooks are used in chemically active environment		ASME B30.10	
	Verify to ensure nut firmly at which trunion rotate. Identify to set-screw in nut/ swivel/ counter pin and thread condition.		Industry Standard	(✓) YES ( ) NO
	Last NDE inspection record		Industry Standard	Last inspect date_____
	RECORD AUX BALL INFORMATION :	Manufacturer:	OEM Manual	McKissick
		Model:	OEM Manual	MB07T200E
		Serial Number:	OEM Manual	0.369622
	Record Auxiliary Ball measurements and details for future comparison with historical data: For Model MB07T200E ONLY		Industry Standard	
	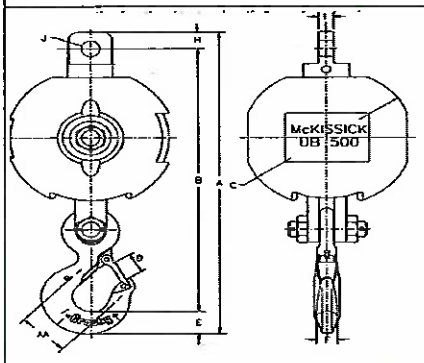	AA Dimensions 3.0 Inch	Industry Standard	3 mm/ inch
		A Dimensions 24.89 Inch	Industry Standard	24.9 mm/ inch
		B Dimensions 21.71 Inch	Industry Standard	21.7 mm/ inch
		C Dimensions 12.50 Inch	Industry Standard	12.5 mm/ inch
		D Dimensions 1.61 Inch	Industry Standard	1.6 mm/ inch
		E Dimensions 1.81 Inch	Industry Standard	1.8 mm/ inch
		F Dimensions 1.38 Inch	Industry Standard	1.35 mm/ inch
		H Dimensions 1.38 Inch	Industry Standard	1.35 mm/ inch
		I Dimensions 0.88 Inch	Industry Standard	0.86 mm/ inch
		J Dimensions 1.31 Inch	Industry Standard	1.3 mm/ inch
Safety system	Check Condition anti - two block , hanging chain ,eye bolts , fix bolts , shackle for missing , corrosion , erosion , deformation		API RP 2D	(✓) YES ( ) NO
	Check anti - two block kick out plate for freely movement		Company Spec/Standard	(✓) YES ( ) NO
	Check anti-2-block device proper function of Main winch		Company Spec/Standard	(✓) Function ( ) False
	Check anti-2-block device proper function of Aux. winch		Company Spec/Standard	(✓) Function ( ) False
	Check relation of boom radius and boom angle (lowest, middle, highest) with refrence to load chart. Recharge fluid W-15 to load indicator, if required.		API RP 2D	(✓) YES ( ) NO
	Functional test of emergency lowering system (See procedure in Emergency Load Lowering Box). **Note:** Keep for 1 Yr PM to sustain crane mechanic competency. **Caution:** Function test must be performed on top deck with max 2-foot height.		Company Spec/Standard	(✓) YES ( ) NO ( ) N/A
	Visually check emergency load lowering kit. Ensure EMERGENCY LOWERING PROCEDURE and MATERIAL LIST are in the box. - Ensure ALL items shown on the list are in the box and in good condition - SECURE THE BOX WITH A TIE WRAP.		Company Spec/Standard	(✓) YES ( ) NO ( ) N/A
Slew Mechanism	Visually check for damage and excessive wear on gear teeth		OEM Manual	(✓) YES ( ) NO
	Visually check slew gear box in the area of oil seal for any leaks		API RP 2D	(✓) YES ( ) NO
	RECORD SLEW GEAR BOX INFORMATION :	Manufacturer:	OEM Manual	EMK
		Model:	OEM Manual	290A
		Serial Number:	OEM Manual	

SYSTEM	TASK		Specification	Record/Reading
	CHECK and RE-TORQUE swing drive gearbox mounting bolts at following brands: - ESKRIDGE, Model: 250 = 150 FT-LBS		API RP 2D	(✓) Yes ( ) No
	Check swing gearbox oil level/condition, top up if required	Meropa 220	OEM Manual	(✓) YES ( ) NO
	Monitor slew gearbox oil condition by visually examine for burnt smell, metal particles, and/or other contaminants, record and change if found.		OEM Manual	(✓) CHANGE OIL ( ) NOT CHANGE OIL
	Change slew gear box oil		OEM Manual	(✓) CHANGE OIL ( ) NOT CHANGE OIL
	Grease all pivot points of slew ring (bearing)		OEM Manual	(✓) YES ( ) NO
	Grease open gears (pinion)		OEM Manual	(✓) YES ( ) NO
	Rotate crane 360 degree and check smoothness of operation		OEM Manual	(✓) YES ( ) NO
	Check swing drive static parking brake for proper operation Caution: DO NOT stop the swing of the crane with this static brake (parking brake)		OEM Manual	(✓) YES ( ) NO
	Check swing drive dynamic parking brake for proper operation		OEM Manual	(✓) YES ( ) NO
	Check swing lock mechanism condition; corrosion ,dent , loos all part,worn and wear		OEM Manual	(✓) YES ( ) NO As found condition.....
	Check swing lock mechanism freely lock and unlock for function. **Check and inspect for hydraulic for leaks on actuator model.**		OEM Manual	(✓) YES ( ) NO As found condition.....
	Check condition of slew ring bolts e.g. Bolt grade and washers. Caution: Use only hardened flat washers under head of bolt. Do not use lock washers, or regular flat washers.		Industry Standard	(✓) YES ( ) NO As found condition.....
	Monitor ball-ring grease sample. If found wear and tear particles, take sample and send to lab. **Wear assessment by grease sample analysis—wear may be monitored by periodic grease sample analysis as describe in this section. Grease samples should be collected every twelve months as a minimum and the results of the analysis recorded; this period should be shortened if obvious metal or contaminants are present.		API PR 2D	( ) SEND TO LAB (✓) NOT SEND TO LAB As found.....
	Verify crane condition and load test as separate procedure. **Table 1—Static/Onboard Test Load and Radius** Static/Onboard Rated Load at a Specific Radius lb (kg) — Test Loads in Excess of Static/Onboard Rated Load at a Specific Radius ≤ 40,000 (18,144) — 25 % > 40,000 ≤ 100,000 (>18,144 ≤ 45,356) — 10,000 lb (4536 kg) > 100,000 (45,356) — 10 %		API 2C	(✓) YES ( ) NO Specific test load.....lbs.
	Verify crane condition and load test as separate procedure. " Record crane load test in load test form."		Company Standard	(✓) YES ( ) NO

Risk Level Definitions: The following 3 levels indicate the impact the noted deficiency poses to the operation or structural integrity of the equipment:

Level 1 = Incidental	Level #2 = Restricted Operation	Level #3 =Out of Service
Minor deficiency that is recommended to be promptly addressed, but poses no safety and/or environmental risk. The crane can still be operated at full duty.	Deficiency identified that has the potential to limit, de-rate or damage the crane, its surroundings and/or the environment. The duty and locked/ tagged out until the crane's duty and operation should be de-rated or service restricted.	The crane should be removed from duty and locked/ tagged out until the deficiency is rectified.

System:	Risk Level:	Component:		In Accordance with:	
		Location:		Date Originated:	
Description:					
Recommended Action:					
Recommended urgency timeframe for corrective action:			Completed Date:	Completed By:	

System:	Risk Level:	Component:		In Accordance with:	
		Location:		Date Originated:	
Description:					
Recommended Action:					
Recommended urgency timeframe for corrective action:			Completed Date:	Completed By:	

System:	Risk Level:	Component:		In Accordance with:	
		Location:		Date Originated:	
Description:					
Recommended Action:					
Recommended urgency timeframe for corrective action:			Completed Date:	Completed By:	

System:	Risk Level:	Component:		In Accordance with:	
		Location:		Date Originated:	
Description:					
Recommended Action:					
Recommended urgency timeframe for corrective action:			Completed Date:	Completed By:	

SYSTEM		TASK		Specification	Record/Reading
System:	Risk Level:	Component:		In Accordance with:	
		Location:		Date Originated:	
Description:					
Recommended Action:					
Recommended urgency timeframe for corrective action:			Completed Date:	Completed By:	

System:	Risk Level:	Component:		In Accordance with:	
		Location:		Date Originated:	
Description:					
Recommended Action:					
Recommended urgency timeframe for corrective action:			Completed Date:	Completed By:	

Job Completed By

[redacted]

Job Completed Date: 13 Feb 2026

CRANE Mfg. : Nautilus
MODEL: 2008-50
SERIAL NUMBER : Crane Specific

LOCATION MAWA.
C2 / BEWD ,BEWE ,BEWG ,BEWH ,BEWI ,MAWA

DATA BASE - PM JOB TASK CARD
34

Crew Size:
Estimated Hours:

SYSTEM	TASK		Specification	Record/Reading
	JOB PREPARATION			
Safety	Perform Job Safety Analysis (JSA)		Company Spec/Standard	(✓) YES ( ) NO
	Obtain "COMPANY" PERMIT TO WORK		Company Spec/Standard	(✓) YES ( ) NO
	Perform Tool Box Talk		Company Spec/Standard	(✓) YES ( ) NO
	BEFORE/AFTER JOB EXECUTION: Ensure to comply with isolation procedure (LOCK OUT/TAG OUT, WARNING SIGNS and BARRIERS).		Company Spec/Standard	(✓) YES ( ) NO
Required Tools	Insure proper tools are available at the job site		Company Spec/Standard	(✓) YES ( ) NO
	Tool bag		Company Spec/Standard	(✓) YES ( ) NO
	Tool box		Company Spec/Standard	(✓) YES ( ) NO
	Tool Container		Company Spec/Standard	(✓) YES ( ) NO
	MPI equipment and operator		Company Spec/Standard	(✓) YES ( ) NO
	Check safety harness Software and Hardware should be good condition before use		Company Spec/Standard	(✓) YES ( ) NO
	Check Rescue Equipment ready to use onsite		Company Spec/Standard	(✓) YES ( ) NO
	Portable Scaffolding and Crew if require		Company Spec/Standard	(✓) YES ( ) NO
Lubricants	Insure proper lubricants and consumables are available at the job site.		Company Spec/Standard	(✓) YES ( ) NO
	Hydraulic System - Hydraulic Oil	Rando HD-68	OEM Manual	(✓) YES ( ) NO
	Slew Gearbox - Gear Oil	Meropa 220	OEM Manual	(✓) YES ( ) NO
	Auxiliary Hoist - Gear Oil	Meropa 220	OEM Manual	(✓) YES ( ) NO
	Main Hoist - Gear Oil	Meropa 220	OEM Manual	(✓) YES ( ) NO
	Grease Points - Lithium Based **IT MUST NOT INCLUDE MOLYBDENUM DISULPHIDE**	MULTIFAK EP#2	OEM Manual	(✓) YES ( ) NO
	Open Gear Teeth - Open Gear Lube highly water resistant and of an adhesive nature.	OMEGA 73	OEM Manual	(✓) YES ( ) NO
	Pneumatic Lubricator	SAE Grade 10	OEM Manual	(✓) YES ( ) NO
	Wire rope Lubricant Company preferred grade	Birlube 70	OEM Manual	(✓) YES ( ) NO
	Engine Oil - SAE Grade 15W-40 (Delo Gold)	15W-40	OEM Manual	(✓) YES ( ) NO
	Safe Load Indicator fluid	W-15	OEM Manual	(✓) YES ( ) NO
	Engine Radiator - Should have radiator preservatives additives	Cat® SCA	OEM Manual	(✓) YES ( ) NO
Consumables	Spray Cold Galvanize		Company Spec/Standard	(✓) YES ( ) NO
	Denso Tape		Company Spec/Standard	(✓) YES ( ) NO
	WD-40		Company Spec/Standard	(✓) YES ( ) NO
History Review	Before starting work, tasks preparation at least 1 day prior to starting work: 1. Review history PM/ CM from Roving Team, 2. Review last PM/ CM/ PMI from Crane Mech, 3. List out all punch list and prepare parts. 4. Review last Certificate task performed		API RP 2D	(✓) YES ( ) NO
	Require to update part history from Crane Mech on following main compenents to ensure the right parts are prepared: - Aux/ Main/ Boom Cylinder, Engine, Swing Gearbox, etc. Reference: Crane OEM Information of each part need to be recorded - Manufacturer & Contact info - Model & serial number - Installation date		Company Spec/Standard	(✓) YES ( ) NO
	Review history data from Certificates and incorporate into current PM: - Pull Test Certificates (ongoing update, 4 yr. history). - Load Test Certificates (ongoing update, 4 yr. history). - Wire Rope Certifications (running rope and standing rope) (life of rope). - Hoist Certifications for hoist classified as "personnel handling" hoist.		API RP 2D	(✓) YES ( ) NO
	Review Last Preventative Maintenance Records (Inspection Reports) - Pre-use (Pre-Post Inspection) - 6 Monthly (API RP 2D Not Defined, Company Standard) - 1 Yearly (API RP 2D Defined Annual Inspection)		API RP 2D	(✓) YES ( ) NO
Lifting Gear Preparation	Visually inspect (Sling, sling hooks and shackles) include Websling / Chain		Company Spec/Standard	(✓) YES ( ) NO
	Check color code / Tag & date inspection		Company Spec/Standard	(✓) YES ( ) NO
	PM JOB STARTING			
General	Determine if access route to-from crane is clean, safe, unobstructed and adequately protected against falls, tripping and slipping		Company Spec/Standard	(✓) YES ( ) NO
	Check drain lines and drip pans for deterioration		API RP 2D	(✓) YES ( ) NO
	Remove any sediment collected in the bottom of drip pans		Industry Standard	(✓) YES ( ) NO
	Check for general crane and components for loss of protective coating and corrosion		Industry Standard	(✓) YES ( ) NO
	Check for missing or loose ,corrosion, deformation pins, pin keepers, bolts, nuts, fasteners of all laders, cages and working platform		API RP 2D	(✓) YES ( ) NO
	Apply grease to exposed grease parts (control valve spools, ball-ring gear, parking brake valve, etc.)		OEM Manual	(✓) YES ( ) NO
Prime Mover	Engine Caterpillar		OEM Manual	(✓) YES ( ) NO
	CATERPILLAR MODEL 3304 DI	S/N.:	OEM Manual	10E05699
		AR.No.:	OEM Manual	1W-3871
	Change engine lube oil & oil filter and check the condition of old oil. As found ;		OEM Manual	(✓) YES ( ) NO
	Check diesel tank level, top up if required.		OEM Manual	(✓) YES ( ) NO
	Check / Clean crankcase breather cap. Change if required		OEM Manual	(✓) YES ( ) NO
	Check / Clean air cleaner filter, Replace if require. (Note : Include inspect air cleaner housing)		OEM Manual	(✓) YES ( ) NO
	Check condition and inspect of the radiator and cap.		OEM Manual	(✓) YES ( ) NO
	Check for any signs of leaks on or around the engine ie; Crankshaft seal for front & rear seal , Engine oil cooler. As found;		OEM Manual	(✓) YES ( ) NO
	Check condition exhaust system for leaks, corrosion, insulation and general. As found ;		OEM Manual	(✓) YES ( ) NO
	Check condition of all engie hoses and tube. (Fuel supply,Cooling system and lube oil system. As found;		OEM Manual	(✓) YES ( ) NO
	Drain water and sediment form diesel tank. As found ;		OEM Manual	(✓) YES ( ) NO
	Check / Clean Diesel tank level sightglass and diesel tag.		OEM Manual	(✓) YES ( ) NO
	Apply grease of fan bearing/shaft.		OEM Manual	(✓) YES ( ) NO
	Check and inspect the vibration damper and pulley. As found ;		OEM Manual	(✓) YES ( ) NO
	Change water coolant and check condition base of water coolant and record PH.		OEM Manual	(✓) YES ( ) NO
	COOLANT PARAMETERS (PH):	6 or higher	OEM Manual	PH = 7

[redacted] / 20 Feb 25

SYSTEM	TASK			Specification	Record/Reading
	Determine if engine hour meter is working and giving accurate measurements and record:			OEM Manual	[illegible]
	HOUR METER PARAMETERS:	LAST READING 2022	2376 HRS	OEM Manual	N/A HRS
	Check and retigthen the bolts of all engine base. / Inspection mouting rubber. As found ;.....			OEM Manual	(✓) YES ( ) NO
	Inspect the engine fan blades that there is a break is it severely distorted or rusted. As found ;.....			OEM Manual	(✓) YES ( ) NO
	Change and adjust the tension engine belts. Remark; To check belt Tension, after has engine run more than 30 minutes apply 400 N (90 lbs) of force midway between the pulleys. Correctly adjusted belts with deflect 13 to 19 mm (1/2 to 3/4 inch).			OEM Manual	(✓) YES ( ) NO
	Check engine HYD starter drive gear bendix and fly wheel gear teeth condition and record. **Replace if required"			OEM Manual	(✓) YES ( ) NO Bendix Gear : 90 % Fly wheel Gear teeth : 90 %
	Check and inspect condition the Bendix of hydraulic Starter motor.			OEM Manual	(✓) YES ( ) NO
	Lubricate and check engine throttle system.			OEM Manual	(✓) YES ( ) NO
	Determine if the tachometer operates properly: Record Value of Idle & Max Speed (RPMs) Note: Too low idle (RPMS) will cause excessive worn at winch brake			OEM Manual	
	ENGINE RPM SPECIFIC	IDLE SPEED	850-950 RPM	OEM Manual	850 RPM
		MAX SPEED	2200 RPM	OEM Manual	2200 RPM
	Confirm engine oil pressure as per Parameters below and Record Value:			OEM Manual	
	ENGINE OIL PRESSURE SPECIFIC	Minimum	Not lower then 30 PSI	OEM Manual	40 PSI
		Maximum	70 PSI	OEM Manual	60 PSI
	Confirm engine fuel pressure Parameters are correct and Record Value:			OEM Manual	
	ENGINE FUEL PRESSURE SPECIFIC** **Note;Fuel pressure at high idle is lower than 105 kPa (15 psi)RAMETERS	Normal	Green Range / 15 psi	OEM Manual	(✓) YES ( ) NO
	Confirm engine temperature Parameters and Record Value:			OEM Manual	
	ENGINE WATER TEMP SPECIFIC	NORMAL	120 - 180 degrees F	OEM Manual	160 F
	Test engine SAFETY DEVICE- ensure engine kill cable shuts off FUEL supply			API RP 2D	(✓) Function ( ) False
	Test engine SAFETY DEVICE- ensure EMERGENCY KILL CABLE - shuts off AIR supply			API RP 2D	(✓) Function ( ) False
	Test engine SAFETY DEVICE- ensure ENGINE low lube oil - releases OIL PRESSURE to ctivate Alarm Air System ***Note*** Engine oil pressure low alarm at 20 PSI			Company Spec/Standard	(✓) Function ( ) False
	Test engine SAFETY DEVICE- ensure HIGH TEMP - releases OIL PRESSURE to activate Alarm Air System			Company Spec/Standard	(✓) Function ( ) False
	Change water separator filter.			OEM Manual	(✓) YES ( ) NO
	Check the general conditionand functioning of turbocharger. Note;			OEM Manual	( ) Leak (✓) Not Leak
	Change fuel filter and inspect the primary hand pump.			OEM Manual	(✓) YES ( ) NO
	Check water temperator regulator.(Thermostat). Change if require refer from cooling temperature.			OEM Manual	(✓) YES ( ) NO
	Check general condition the Governor and control linkage. (Inspect the throttle linkage)			OEM Manual	(✓) YES ( ) NO
	Check condition of water pump housing.			OEM Manual	(✓) YES ( ) NO
	Check timing point (Timing mark & injection pump)			OEM Manual	(✓) YES ( ) NO
	Check or adjust the engine valve lash. (Intake vale = 0.015", Exhaust valve = 0.025")			OEM Manual	(✓) YES ( ) NO
	Check condition wear of pump drive spline and record **Note; Remaining 70% of Original Spline Surface must be replace.			Company Spec/Standard	90 % Remaining
	Check condition wear of adaptor Coulping spline shaft and record **Note; Remaining 70% of Original adaptor Coulping spline shaft Surface must be replace.			Company Spec/Standard	90 % Remaining
	Check condition wear of Coulping spline and record. Re-tigthen of all lock bolts. **Note; Remaining 70% of Original adaptor Coulping spline shaft Surface must be replace.			Company Spec/Standard	90 % Remaining
Hydraulic Start System (Apply for C2-Remote P/F Only)	Check pressure system at the pressure gauge which should reach 3,000 PSI as standard when the system is FULLY charged. Record Value. (As the system cools down, the pressure should drop slightly and finally stabilised.)			OEM Manual	(✓) YES ( ) NO
	Visually inspect all hydraulic connections and hoses for leaks and retighten if necessary. (Caution: This should NOT be done if the system is under pressure.) 1. Slowly release system pressure by loosening the bleed screw on top of the hand pump. 2. Ensure no pressure remains, retighten the suspected leak fitting or replace the damaged hose or component. 3. Retighten the bleed screw on the hand pump. 4. Pump the system up to 2200 - 2600 PSI 5. Inspect that the leak was eliminated.			OEM Manual	(✓) YES ( ) NO
	Function check Accumulator Pre-charge. (Caution: This should NOT be done if the system is under pressure.) 1. Shut the engine off, release system pressure via the bleed screw on top of the hand pump 2. Retighten bleed screw and actuate the hand pump. The pressure will rapidly increase and then stabilised. This pressure is related to accumulator gas pre-charge pressure. 4. If the pressure rapidly increase to 3000 PSI, it indicates that the accumulator has lost its gas charge. 5. Troubleshoot as necessary			OEM Manual	(✓) YES ( ) NO
	Check function rechaging system by function boom down while the engine running. 1. The crane engine is running at 1,000-1500 RPM. 2. Slowly control lever boom function down for charging pressure to accumulator. 3. This pressure should read on prssure gauge between 2200 - 2600 PSI depending on the recharge ratio 80% std. (90% optional). Record Pressure Value.			OEM Manual	2500 PSI
	Check Nitrogen pressure in Accumulator ***Note**spec @ 1,500 psi as follow schematic and if found pressure loss below 1400 PSI then prepare recharge nitrogen in system			OEM Manual	1500 PSI
	Every 36 months or 2000 engine running hours (approximately 1500 starts) replace the high pressure filter.			OEM Manual	(✓) YES ( ) NO
Pneumatic System	Check for noisy compressor operation, which could indicate a worn drive gear coupling, a loose pulley or excessive internal wear			OEM Manual	(✓) YES ( ) NO
	Check Air Compressor external oil supply and return lines, if applicable, for kinks, bends, or restrictionsto flow			OEM Manual	(✓) YES ( ) NO
	Inspect the Air compressor discharge port, inlet cavity and discharge line for evidence of restrictions and carboning. (If excessive buildup is noted)			OEM Manual	(✓) YES ( ) NO
	Check all hose connections are sound and all mounting and pivoting connections are secure.			OEM Manual	(✓) YES ( ) NO
	Check condition / Clean and lubricate unloading valve			OEM Manual	(✓) YES ( ) NO
	Check proper air pressure is available for the system. Record Value.			OEM Manual	
	AIR SYSTEM PARAMETERS:	MAX 60 PSI		OEM Manual	N/A PSI
	Visually inspection condition of air receiver for signs of corrosion or loose of structural integrity.			Industry Standard	(✓) YES ( ) NO
	Check the hose, piping and tubing for mechanical damage, corrosion, splits, blisters, cracking or excessive abrasion on the outer surface			Industry Standard	(✓) YES ( ) NO

[redacted] / 20 Feb 25

SYSTEM	TASK			Specification	Record/Reading
	Drain off air filter and reciever to remove condensed water. If water is present, drain until water is removed.			Industry Standard	(✓) YES ( ) NO
	Check proper operation of pop off valve, by manually functioning valve.			Industry Standard	(✓) YES ( ) NO
	Check proper operation of manual latch valve, by manually functioning latch.			Industry Standard	(✓) YES ( ) NO
	Check proper operation of small engine alarm horn.			Industry Standard	(✓) YES ( ) NO
Hoist / Brakes	Visually check a hoist exhibits erratic operation and/or unusual noise, the hoist must be taken out of service until it is inspected and serviced by a qualified technician. Continued operation of a hoist with a defect in a critical component may lead to loss of load control, property damage, serious injury or death.			OEM Manual	(✓) YES ( ) NO
	Visual exteriors of hoist, frames, drums and flanges for damage, leaks, cracks and wear and repair/replace as required to maintain the structural integrity of the hoist.			OEM Manual	(✓) YES ( ) NO
	Check all hoist mounting pins, bolts or other fasteners and replace or tighten as necessary.			OEM Manual	(✓) YES ( ) NO
	Lubricant level must be maintained between the minimum and maximum levels; midway up sight glass or at bottom of level plug port as equipped and check/clean plug vent. Use only the recommended type of lubricant.			OEM Manual	(✓) YES ( ) NO
	Inspect Brake Valve Opening Pressure test V/V 1-1/4" PD Series : no lower than 550 PSI V/V 1-1/2" CH Series : no lower than 575 PSI	Main Aux		Braden Bulletin 527-Dec,1996	600 PSI 600 PSI
	Inspect Brake cylinder opening pressure test. CH/PD Series : 400-450 PSI.	Main Aux		Industry Standard	400 PSI 400 PSI
	Measure differancian of static and dynamic brake. CH/PD Series : 150-250 PSI.	Main Aux		Industry Standard	200 PSI 200 PSI
	Check for external oil leaks and repair as necessary. This is extremely important due to the accelerated wear that will result from insufficient lubricating oil in the hoist.			OEM Manual	(✓) YES ( ) NO
	RECORD BOOM CYLINDER INFORMATION :	Boom cylinder Diameter:		OEM Manual	DIA: 11 Inch
		CY Number:		OEM Manual	L=0352-01 R=0352-A5
		Serial Number:		OEM Manual	L=9399 R=0361
	RECORD MAIN HOIST INFORMATION :	Manufacturer:		OEM Manual	Braden
		Model:		OEM Manual	CH 185A-36110-01-1
		Serial Number:		OEM Manual	0106240
	Check MAIN HOIST for proper operation and good condition			API RP 2D	(✓) YES ( ) NO
	Brake test & record pressure of MAIN HOIST.			OEM Manual	(✓) YES ( ) NO As found 2900 PSI
	Change main hoist gear oil and inspect for small particles in the old oil. ** Refer to Onsite Gear Oil Sample Procedure ** ** Replace and send oil sample to SKL if abnormal ** ** Take photo of Oil Sampling for Reference**			OEM Manual	(✓) YES ( ) NO As found —
	RECORD AUXILIARY HOIST INFORMATION :	Manufacturer:		OEM Manual	Braden
		Model:		OEM Manual	PD18C-9TL-29059-02-1
		Serial Number:		OEM Manual	1031679
	Check AUXILIARY HOIST for proper operation and good condition			API RP 2D	(✓) YES ( ) NO
	Brake test & record pressure of AUXILIARY HOIST			API RP 2D	(✓) YES ( ) NO
	Change Aux. hoist gear oil and inspect for small particles in the old oil. ** Refer to Onsite Gear Oil Sample Procedure ** ** Replace and send oil sample to SKL if abnormal ** ** Take photo of Oil Sampling for Reference** Please record if any abnormal condition. Note.....			OEM Manual	( ) SEND SKL LAB (✓) NOT SEND SKL LAB
	Check pressre relief Valve: Determine hoistes' relief valve pressure gauge is working and giving accurate measurement by notice whether pressure gauge is vibrating or not. If not, set relief valve pressure in accordance with the schematic and parameters below. Record all readings.			OEM Manual	(✓) YES ( ) NO
	BOOM RELIEF VALVE TEST	Relief Specific:	3,000 PSI	OEM Manual	3,000 PSI
	MAIN HOIST RELIEF VALVE TEST	Relief Specific:	2,950 PSI	OEM Manual	2950 PSI
	AUX HOIST RELIEF VALVE TEST	Relief Specific:	2,950 PSI	OEM Manual	2950 PSI
	SWING RELIEF VALVE TEST	Relief Specific:	1,200 PSI	OEM Manual	1200 PSI
	Measure Pressure of hoist motor case drains and Record Value Reference Bulletin: BRADEN Inspection, Testing, Preventive Maintenance and Special Operating Instructions For Planetary Hoists PB-308 latest edition for further details.			OEM Manual	
	MAIN HOIST CASE DRAIN for Gear Motor (Down Mode).	PRESSURE	< 100 psi	Company Spec/Standard	10 PSI
	AUX. HOIST CASE DRAIN for Gear Motor (Down Mode).	PRESSURE	< 100 psi	Company Spec/Standard	10 PSI
Hydraulic System	Check hydraulic tank oil level. Oil should be visible in the sight glass. Top up as required (3/4 Tank Minimum)			OEM Manual	(✓) YES ( ) NO
	Check hydraulic oil condition. (Check if running hours are more than 100 hours from last oil change or during Annual Inspection) ** Refer to Onsite Hydraulic Oil Sample Procedure ** ** Replace and send oil sample to SKL if abnormal ** ** Take photo of Oil Sampling for Reference**	Rando HD-68		Company Spec/Standard	( ) SEND SKL LAB (✓) NOT SEND SKL LAB
	Inspect hydraulic tank and strainer filter. Change hydraulic oil, if required with lab confirmation.			Company Spec/Standard	(✓) YES ( ) NO
	Drain off 1 liter of oil to remove condensed water. If water is present, drain until water is removed and top up with clean oil			Industry Standard	(✓) YES ( ) NO
	Check for any hydraulic leaks			Industry Standard	(✓) YES ( ) NO
	Check the hydraulic hose, piping and tubing for mechanical damage, corrosion, splits, blisters, cracking or excessive abrasion on the outer surface			API RP 2D	(✓) YES ( ) NO
	Check that all hydraulic hose connections are sound and that all mounting and pivoting connections are secure.			Industry Standard	(✓) YES ( ) NO
	Lubricate hydraulic swivel in pedestal and insure tie down restrains are in place and preventing the swivel from rotating with the crane structure.			OEM Manual	(✓) YES ( ) NO
	Ensure the filler breather on tank is not covered or clogged			Industry Standard	(✓) YES ( ) NO
	Visually inspect for missing or loose pins, pin keepers, bolts, nuts, fasteners on all pumps, motors and valves.			API RP 2D	(✓) YES ( ) NO
	* Re-tighten the stud bolt of hydraulic main pump and marking the nut for checking to prevent loosening. Note : Torqe spec model P76, P75, PGP/PGM350 ,PGP/PGM330 = 200 ft-lbs. , for model PGP/PGM315 = 140 ft-lbs. and PGP/PGM365 = 450 ft-lbs.			The Commercial Intertech manual	(✓) YES ( ) NO
	Check the filter bypass indicator, while engine is running			OEM Manual	(✓) YES ( ) NO
	With engine running (after all other items pass inspection), check the system for leaks around fittings, hoses, valves and reservoirs			Industry Standard	(✓) YES ( ) NO
	With engine running, check the source of any unusual noise or vibration that may cause or indicate equipment damage or wear			Industry Standard	(✓) YES ( ) NO

[redacted] / 20 Feb 25

SYSTEM	TASK				Specification	Record/Reading
	Ensure all hoses are properly rated for the system, see "Parameters" for each system for details.				Industry Standard	✓ YES ( ) NO
	Record hydraulic oil operating temperture. Note: Hydraulic fluid overheating temperature is over 180 F degrees or 82 C, degrees (reservoir temperature)				Industry Standard	160 Degree F
	Determine if hydraulic return pressure gauge is working and giving accurate measurements. Record readings					
	RECORD HYDRAULIC RETURN PRESSURE PARAMETERS:			60 PSI "maximum"	OEM Manual	60 PSI
	Check and inspect the hydraulic return filters and seals.				OEM Manual	✓ YES ( ) NO
	Function Testing and record pressures with engine at :			2,200 RPM	API RP 2D	
	BOOM FUNCTION TEST (Need Crane Mech to verify each platform)				OEM Manual	
	Boom Angle : 60 Degree (Recommend or as applicable)	UP	Cracking pressure	RECORD	OEM Manual	600 PSI
			Full Speed Pressure	RECORD	OEM Manual	1000 PSI
		DOWN	Cracking pressure	RECORD	OEM Manual	1200 PSI
			Full Speed Pressure	RECORD	OEM Manual	2800 PSI
	MAIN HOIST FUNCTION TEST (Need Crane Mech to verify each platform)				OEM Manual	
	Boom Angle : 60 Degree (Recommend or as applicable)	UP	Cracking pressure	RECORD	OEM Manual	100 PSI
			Full Speed Pressure	RECORD	OEM Manual	600 PSI
		DOWN	Cracking pressure	RECORD	OEM Manual	600 PSI
			Full Speed Pressure	RECORD	OEM Manual	1400 PSI
	AUX HOIST FUNCTION TEST (Need Crane Mech to verify each platform)				OEM Manual	
	Boom Angle : 60 Degree (Recommend or as applicable)	UP	Cracking pressure	RECORD	OEM Manual	200 PSI
			Full Speed Pressure	RECORD	OEM Manual	600 PSI
		DOWN	Cracking pressure	RECORD	OEM Manual	600 PSI
			Full Speed Pressure	RECORD	OEM Manual	1400 PSI
	SWING FUNCTION TEST (Need Crane Mech to verify each platform)				OEM Manual	
	Boom Angle : 60 Degree (Recommend or as applicable)	LEFT	Cracking pressure	RECORD	OEM Manual	200 PSI
			Full Speed Pressure	RECORD	OEM Manual	600 PSI
		RIGHT	Cracking pressure	RECORD	OEM Manual	800 PSI
			Full Speed Pressure	RECORD	OEM Manual	1000 PSI
Electrical system, Crane Boom Lighting and red obstruction light	Check the electrical junction boxes, wires and connections for deterioration, desiccant bags, (replace as required)				Industry Standard	✓ YES ( ) NO
	Check the condition of the grounding and lighting protection system.				Company Spec/Standard	✓ YES ( ) NO
	Visually inspect boom floodlight and light guards for loose, missing, corroded				Company Spec/Standard	✓ YES ( ) NO
	Check condition pipe support , U-bolt ,nuts of boom floodlight and Electric slipring for loose , missing , corroded				Company Spec/Standard	✓ YES ( ) NO
	Check Electric slipring/swivel for 360° continuous rotation				OEM Munnal	✓ YES ( ) NO
	Check Water ingress, condensation in electric slipring, red obstruction light and boom floodlight				OEM Munnal	✓ YES ( ) NO
	Check feely movement and lubricate of boom floodlight				OEM Munnal	✓ YES ( ) NO
	With generator in operation, intergize all lights to unsure proper function.				API RP 2D	✓ YES ( ) NO
	Check condition of crane boom lighting and safety net is secured with strong point. * **Safety net should be replace 24 months after installation (2 year)***			Last installation date _____	Company Spec/Standard	( ) YES ( ) NO
	Check function of crane sound signal				Company Spec/Standard	( ) YES ( ) NO ✓ N/A
	Check function of crane boom lighting at boom upper section				Company Spec/Standard	✓ YES ( ) NO ( ) N/A
	Check function of crane boom lighting at boom lower section				Company Spec/Standard	✓ YES ( ) NO ( ) N/A
	Check function of crane boom lighting at winch skid				Company Spec/Standard	✓ YES ( ) NO ( ) N/A
	Check function of crane boom lighting at crane cabin				Company Spec/Standard	✓ YES ( ) NO ( ) N/A
	Check function becon light at boom tip				Company Spec/Standard	✓ YES ( ) NO ✓ N/A
	Inspection wire rope guide & Roller assembly				Company Spec/Standard	( ) YES ✓ NO
	Visually inspect red obstruction light pipe support, u-bolts, nuts connection to hand rail for loose, missing, corroded				Company Spec/Standard	✓ YES ( ) NO
	Visually inspect safety sling attached to the red obsruction light and its base for loose, missing, corroded				Company Spec/Standard	✓ YES ( ) NO
	Visually inspect red obstruction light function. The light is designed to turn on all the time.				Company Spec/Standard	✓ YES ( ) NO
Operator Control Station	Check general condition of control panel, bolts, paint security, etc.				API RP 2D	✓ YES ( ) NO
	Determine if there is a serviceable fire extinguisher in the vicinity of the crane				Company Spec/Standard	✓ YES ( ) NO
	Determine if correct load chart is in use and easily visible for operator				API RP 2D	✓ YES ( ) NO
	Determine if charts, indicators and hand signal chart are in the cabling and firmly attached				API RP 2D	✓ YES ( ) NO
	Determine if angle/radius indicator plate is easily visible to operator and is moving freely.				API RP 2D	✓ YES ( ) NO
	Check condition of control levers and determine if they "dead-man" back to the neutral position.				API RP 2D	✓ YES ( ) NO
	Check condition of pressure gauges.				API RP 2D	✓ YES ( ) NO
	Check proper control labels are firmly installed, completely legible and properly labeled				API RP 2D	✓ YES ( ) NO
	Check controls for freedom-of-movement				API RP 2D	✓ YES ( ) NO
	Check condition , Leak, freely moement of Dynamic swing break system *** Note; If HYD Oil loose in CYD reservoir must be refill*				OEM Manual	✓ YES ( ) NO
	Check condition , Leak, freely moement of Accelerate System *** Note; If HYD Oil loose in CYD reservoir must be refill*				OEM Manual	✓ YES ( ) NO
	Check all safety glass and rubber seal for proper condition				API RP 2D	✓ YES ( ) NO ( ) N/A
	Function Test Horn. Note;.....				Industry Standard	✓ YES ( ) NO ( ) N/A
	Ensure PRE/POST Check List and Pocket Manual in the cabin. Note;.....				Company Standard	✓ YES ( ) NO ( ) N/A
Load Indicator System	Visual check on fittings and connections for leaks. Fix leak if any. Note:.....				OEM Manual	( ) YES ✓ NO

[redacted] / 20 Feb 25

SYSTEM	TASK	Specification	Record/Reading
	Should any leaks exist, stop leak and recharge system, refer to maintenance manual	OEM Manual	(✓) YES ( ) NO
	Change and flushing Load cell fluid.	OEM Manual	(✓) YES ( ) NO
	Check general condition of tubbing, hoses, pins bolts, paint, etc.	Industry Standard	(✓) YES ( ) NO
	Insure load cell is free of obstructions	OEM Manual	(✓) YES ( ) NO
	Check condition of gauge(s) face and clean glass as required.	OEM Manual	(✓) YES ( ) NO
	Check the scale's operation and weighing accuracy. (Main Hoist) Remark : Maximum variance +/- 2% Note;.....	Company Spec/Standard	(✓) YES ( ) NO ( ) N/A
	Check the scale's operation and weighing accuracy. (Aux. Hoist) Remark : Maximum variance +/- 2% Note;.....	Company Spec/Standard	(✓) YES ( ) NO ( ) N/A
	Check the internal casting fluid of weight indicator. top up if required	Industry Standard	(✓) YES ( ) NO ( ) N/A
	Insure SWL tag matches ratings on the Crane Load Chart.	OEM Manual	(✓) YES ( ) NO ( ) N/A
	Insure Boom Length, matches the Crane Load Chart	OEM Manual	(✓) YES ( ) NO ( ) N/A
	Insure Boom Angle measurements and readings match the boom angle indicator.	OEM Manual	(✓) YES ( ) NO ( ) N/A
	Insure Boom Radius measurements indicate the distance from center line of the crane to the hook	OEM Manual	(✓) YES ( ) NO ( ) N/A
	Check Main load cell gap 1/4 (0.250) inch	OEM Manual	(✓) YES ( ) NO ( ) N/A
	Check Aux load cell gap 3/8(0.380) inch (Compression Load Cell Type)	OEM Manual	(✓) YES ( ) NO ( ) N/A
Pedestal & Structure	Visually check Pedestal for chipped/cracked paint, deformation, worn parts, dents, corroded areas, cracks weld, etc.	API RP 2D	(✓) YES ( ) NO
	Check water rain drain at pedestal must be not obstuct	Industry Standard	(✓) YES ( ) NO
	Check pin and cotter pin of pedestal missing , corrosion, wear, damage and exercise pin.	Industry Standard	(✓) YES ( ) NO
	Visually check Base - Plate connection and Base hoist Structure for chipped/cracked paint, deformation, worn parts, dents, corroded areas, cracks weld, etc.	API RP 2D	(✓) YES ( ) NO
	Check A fixed such as Handrial, Walkway, Grating, stationary structure without significant movement in response to waves and currents in normal operating conditions.	API RP 2C	(✓) YES ( ) NO
	Visually check and lubricate maintenance jib. ***Note*** If on pedestal crane	OEM Manual	(✓) YES ( ) NO ( ) N/A
	Check maintenance jib is secure firmly. ***Note*** If on pedestal crane	OEM Manual	(✓) YES ( ) NO ( ) N/A
Box Boom & Luffing CYD	Check and Verify entire box boom and Boom CYD for loss of protective coating and corrosion. Note;.....	API RP 2D	(✓) YES ( ) NO
	Check and Verify entire box boom and Boom CYD for chipped/cracked paint, deformation, worn parts, dents, corroded areas, cracks, etc. Note;.....	API RP 2D	(✓) YES ( ) NO
	Check and Verify boom end connections, for bends, dents, corroded areas, cracked welds, and signs of mechanical damage, wear, etc. **any deviation should be reported**	API RP 2D	(✓) YES ( ) NO
	Check and Verify boom rest and wooden support to ensure it's in good condition	API RP 2D	(✓) YES ( ) NO
	Inspect pin and pin holes of Upper tank and Lower tank for excessive clearance	OEM Manual	(✓) YES ( ) NO
	BOOM CYLINDER PIN MAXIMUM TOLERANCE 0.125 inch (3mm)	Industry Standard	As found.....
	Check BOOM CYLINDERS for proper operation and good condition	API RP 2D	(✓) YES ( ) NO
	Check Boom cylinder barrels and rods for leaks, mechanical damage and corrosion	Industry Standard	(✓) YES ( ) NO
	Check and measurement boom foot pin and connection pins for clearance	Industry Standard	
	BOOM FOOT PINS & BOOM BOX CONNECTER PIN TOLERANCE 0.125 inch (3mm)	Industry Standard	
	Boom Foot Pin Tolerance	Industry Standard	0.021 inch
	Boom Box Connecter Pin Tolerance	Industry Standard	0.018 inch
	Check connecting bolts of box boom loose, corrosion, wear, damage	OEM Manual	(✓) YES ( ) NO
	Lubricate boom foot pins and bushings	OEM Manual	(✓) YES ( ) NO
	Lubricate boom cylinder pins, bearings and bushings	OEM Manual	(✓) YES ( ) NO
	Boom function test angle/radius to correction **Note; The cylinder(s) mechanism shall be capable of elevating the boom from a minimum of zero degrees to the maximum recommended boom angle.	API RP 2C	(✓) YES ( ) NO
	Operation functional test and verify Boom Creeping down **Note ; Test at angle 60° Boom cylinder leaking Seal gland.	Industry Standard	(✓) YES ( ) NO As found Leaking
Wire Rope	Determine if parts-of-line match parts of line on the load chart in the crane cabin.	API RP 2D	(✓) YES ( ) NO
	Determine if visible portion of wire rope adequately lubricated. If not lubricate wire rope	API RP 2D	(✓) YES ( ) NO
	For each layer of wire rope on drum, check that all rope is parallel and each crossover point at hoist flanges is correct	API RP 2D	(✓) YES ( ) NO
	The top layer of rope must not be lower to the flange tips 2.5 in for Smooth drum,2 in for groove drum or 2.5 times of wire rope diameter	API RP 2C	(✓) YES ( ) NO
	Inspect wire rope for; kinking, crushing, broken wires, necking down of rope diameter, worn outside wires, corroded or broken wires at end connection, cutting or unstringing.	API RP 2D	(✓) YES ( ) NO As found.....
	NoteRunning Ropes of rotation-resistant construction used in the main or auxiliary Hoist: - Four (4) Randomly distributed broken wires within 30 rope diameter - Two (2) broken wires in one stand within 6 rope diameter	API RP2D Edition 7	(✓) YES ( ) NO As found.....
	One valley break can indicate internal rope damage requiring close inspection of this section of the rope. When one or more valley breaks are found in one lay length the rope should be retired.	API RP2D Edition 7	(✓) YES ( ) NO As found.....
	Reductions for the rope diameter, from initial wire rope dimensional measurements, in a nonworking area (an area away from the sheaves) compared to the lowest diameter of rope measured in three working areas (areas where the rope regularly goes over a sheave) of more than the following is observed: — 3/64 in. (0.047 in.) (1.2 mm) for diameters up to and including 3/4 in. (19.1 mm); — 1/16 in. (0.062 in.) (1.6 mm) for diameters of 7/8 in. to 1-1/8 in. (22.2 mm to 28.6 mm); — 3/32 in. (0.093 in.) (0.8 mm) for diameter of 1-1/4 in. to 1-1/2 in. (31.8 mm to 38.1 mm); — For rope diameters greater than 1-1/2 in., a 5 % diameter loss from baseline measurement. —Wear of one-third the original diameter of the outside individual wires.	API RP2D Edition 7	(✓) YES ( ) NO As found dimension.....
	Increase in the length of an individual rope lay is observed. This increase in lay length and accompanying reduction in diameter can be caused by failure of the core. This can occur more readily in ropes or rotation-resistant construction.	API RP2D Edition 7	(✓) YES ( ) NO As found.....
	-Inspection and Verify running and standing rope from heat effect **Note; Not more than 250°C -There is evidence of heat damage from any source (i.e. engine exhaust, flare towers, stress corrosion cracking, etc.). Heat can be generated by passing a rope over a frozen or non-turning sheave, contact with structural members of the crane, improperly grounded welding leads or lightning strikes	Industry Standard	(✓) YES ( ) NO As found.....
	With the boom at the highest possible angle and the main load block or overhaul ball at the water level, ensure there is a minimum of 5 wraps of wire-rope remaining on the drums. Note: (Thai law, requires minimum of 2 wraps)	API SPEC 2C / Thai Law	(✓) YES ( ) NO
	Reference: - Running rope safety factor not less than 6 for wire rope that are running wire, (Thai law; Wire rope nominal breaking strength x number parts of line / Design factor 6) - Standing rope safety factor not less than 3.5 for wire rope that are stay cables, (Thai law)	Thai Law	(✓) YES ( ) NO ( ) N/A

[redacted] / 20 Feb 25

SYSTEM	TASK		Specification	Record/Reading
	Measure and record nominal diameter of "running ropes"main and auxiliary (particularly on drum, equalizer sheave and at sockets, clips and dead end points) *****Nominal = several measurements added together divided by Number of measurements*****		API RP 2D	✓ YES ( ) NO
	Inspect wire rope and record dimension.		API RP 2D	
	MAIN WIRE ROPE OD:	FULL DRUM	OEM Manual	0.992 inch
		HALF DRUM	OEM Manual	0.993 inch
		WATER LEVEL	OEM Manual	0.994 inch
	AUX WIRE ROPE OD:	FULL DRUM	OEM Manual	0.560 inch
		HALF DRUM	OEM Manual	0.565 inch
		WATER LEVEL	OEM Manual	0.564 inch
	Slip-Cut 1 meter of all ropes at the wedge socket and re-wedge to prevent rust inside of wedge socket (at outward end of rope, not on hoist drum) Dead end tail length is never less than 6 inches, or: - Standard 6 to 8 Strand wire rope is not less than 7 times the rope diameter - Rotation Resistant Wire Rope is not less than 20 times the rope diameter		Company Spec/Standard	✓ YES ( ) NO
	U-bolt and Fist Grip Clips: Extreme care should be exercised to assure proper orientation of U-bolt clips. The U-bolt segment shall be in contact with the wire rope dead-end. The orientation, spacing, torquing, and number of all clips shall be in accordance with the crane manufacture's specifications.		API SPEC 2C	✓ YES ( ) NO
	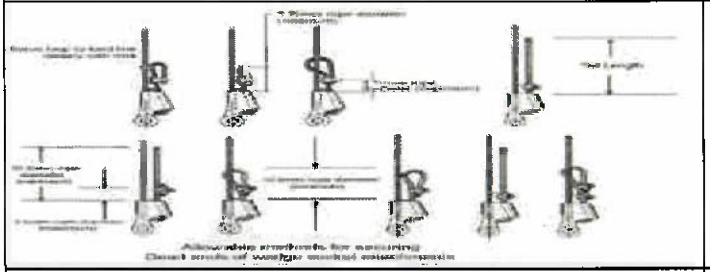		API SPEC 2C	Model ans Size wedge socket. Main hoist. Model..... Size..... Aux.Hoist. Model..... Size.....
	Verify that the wedge socket and wedge are the correct size for the rope in use and record the size		API SPEC 2C	✓ YES ( ) NO
Sheaves & Bearings	Lubricate all sheave bearings.		API RP 2D	✓ YES ( ) NO
	Visually inspect all sheaves and bushings for cracks, wear and deterioration		API RP 2D	✓ YES ( ) NO As found.....
	Visually inspect wire rope track of sheave for rope imprints, wear and deterioration. If damage exist sheave should be resurfaced or replaced.		API RP 2D	✓ YES ( ) NO As found.....
	Pins retained by snap rings, bolt lock shafts, plates lock should be checked for missing or loose for all		API RP 2D	✓ YES ( ) NO
	Check wirerope guards and keepers for proper location and condition.		API RP 2D	✓ YES ( ) NO
	Determine if wire rope is jumping the sheaves, by looking for signs of damage on the sheave brim		Industry Standard	✓ YES ( ) NO
	Sheave Rope Profile for optimum Rope life the sheave groove profile should be correctly matched to the rope diameter		Industry Standard	✓ YES ( ) NO
	Check rope sheave should be machine grooved to adepth of not less than 1.5 times the norminal diameter of the rope		Industry Standard	✓ YES ( ) NO
	Inspect all groove of sheaves by sheave gauge , Use sheave gauge as show in figure .Grooves should have an arc of contact with the wire rope between 135 and 150 degrees. They should be tapered to permit the rope to enter and leave the groove smoothly.		Industry Standard	
	MAIN POINT SHEAVES: Note:.....		Industry Standard	No.1 ( ) YES ( ) NO No.2 ( ) YES ( ) NO
	AUX SHEAVES: Note:.....		Industry Standard	No.1 ( ) YES ( ) NO
	IDLER SHEAVES: Note:.....		Industry Standard	AUX. ( ) YES ( ) NO Main ( ) YES ( ) NO
	Visual Inspection good Condition			
	Pins for bronze bushing and straight roller bearing should have a running clearnace of .031 inch/ sheave of end play and should be adjusted accordingly.(count from left)		Industry Standard	( ) YES ( ) NO
	Confirmation the dimension (OD) of all sheaves and records		Industry Standard / API Standard	( ) YES ( ) NO
	MAIN POINT SHEAVES:		Industry Standard	Sheave No.1.....18..... inch Sheave No.2.....18..... inch
	AUX SHEAVES:		Industry Standard	Sheave No.1.....10..... inch
	IDLER SHEAVES:		Industry Standard	Sheave AUX.....18..... inch. Sheave Main.....18..... inch.
	Ensure the sheaves are aligned and the fleet angle is correct **Remark ; Wire rope User's Manual allows 2 degree on grooved winch drum, Smooth Drum should be not more than 1-1/2 degree		API RP 2D	( ) YES ( ) NO
	Determine if wire rope size and sheave sizes/grooves are compatible and record size. Sheave pitch diameter (D) to nominal wire rope diameter (d) ratio (D/d) shall not be less than 18:1		API SPEC 2C	✓ YES ( ) NO
	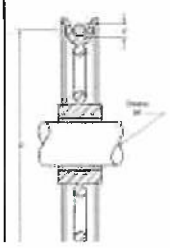	MAIN POINT SHEAVES: SHEAVE D / WIRE ROPE d = >18	API SPEC 2C	18 inch (D) 0.8 inch (d) 22 (Ratio D/d)
		AUX SHEAVES: SHEAVE D / WIRE ROPE d = >18	API SPEC 2C	10 inch (D) 0.56 inch (d) 18 (Ratio D/d)
		IDLER SHEAVES: SHEAVE D / WIRE ROPE d = > 18 (If applicable)	API SPEC 2C	18 inch (D) 0.8 inch (d) 22 (Ratio D/d)

[redacted] / 20 Feb 25

SYSTEM	TASK			Specification	Record/Reading
		MAIN BLOCK SHEAVES:	SHEAVE D / WIRE ROPE d = > 16	API SPEC 2C	19 Inch (D) 3/4 Inch (d) 21 (Ratio D/d)
Load Block	Load Block: Check the load block for cleanliness, binding sheaves, damaged or worn sheaves, worn or distorted sheave pins, broken bolts, and worn cheek weights. Note ;.....			Industry Standard	(✓) YES ( ) NO As found.....
	Hook: Check the hook damage, excessive wear to the hook safety latch, hook swivel trunnions, thrust collar, securing, damage or missing lubrication fittings, proper lubrication, cracks and gouges, and if visibly bent or twisted or has been exposed to welding or arching. Note ;.....			Industry Standard	(✓) YES ( ) NO As found.....
	Hook: Tip has been bent more than 10 degree out of plane from the hook body			Industry Standard/API RP2D7	(✓) YES ( ) NO As found.....
	Inspect the Pins for bronze bushing and straight roller bearing should have a running clearnace of .031 inch/ sheave of end play and should be adjusted accordingly			Industry Standard	(✓) YES ( ) NO
	Inspect Hook or shackle to swivel case clearance is set at .031 to .062 inch, Clearance exceeding .12 to .18 (ONLY CROSBY BRAND)			OEM Crosby	(✓) YES ( ) NO
	OEM STANDARD RECOMMEND that Crane block removal from service untill replaced and repair following below			**OEM STANDARD**	
	- Elongated center pin and hook trunnion holes exceeding 5% of Original diameter			OEM STANDARD	(✓) YES ( ) NO As found.....
	-Material loss due to wear exceeding 10% of original section			OEM STANDARD	(✓) YES ( ) NO As found.....
	-Sheave wire rop groove diameter smaller than 2.5%			OEM STANDARD	(✓) YES ( ) NO As found.....
	Loosened tie bolts nuts, center pin round nuts, check weight cap screws and hook nut cap screws. Tie bolt nuts to be torqued to 35-40 ft.l.bs and restaked, all other fasteners wrench tight			**OEM STANDARD**	(✓) YES ( ) NO
	Throat opening - any distortion causeing an increase in throat opening of 5% not ot exceed 1/4 in. (6 mm.)(or as recommended by the manufacturer)			**ASME B30.10**	(✓) YES ( ) NO
	Inspect rope track worn in sheave groove, sheave must be resurface or replace			API RP 2D	(✓) YES ( ) NO
	Ensure the load block is not using "Cast Iron" cheek weights they can not be used as per API			API SPEC 2C	(✓) YES ( ) NO As found.....
	Determine if all hooks are equipped with properly operating safety latches and check for proper functioning			API RP 2D	(✓) YES ( ) NO
	Lubricate sheave bearings and swivels			OEM Manual	(✓) YES ( ) NO
	Re-thighten nut firmly to point at which trunion will just rotate, the Re-tighten set-screw in nut and thread condition as in the picture below,			Industry Standard	(✓) YES ( ) NO
	Last NDE Inspection record			Industry Standard	Last Inspect date 59
	RECORD LOAD BLOCK INFORMATION :		Manufacturer:	OEM Manual	McKissick
			Model:	OEM Manual	M055D1611
			Serial Number:	OEM Manual	0105026
	Record Load block measurements and details for future comparison with historical data @			Industry Standard	(✓) YES ( ) NO
	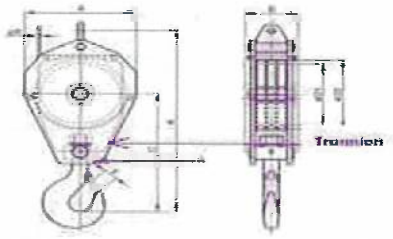		A - Block OD	Industry Standard	14 3/8 mm/ Inch
			B - Block length	Industry Standard	18 1/2 mm/ Inch
			C - Center of Pin to hook Saddle	Industry Standard	22 mm/ Inch
			D1 - Sheave Diameter	Industry Standard	16 mm/ Inch
			E - Block Width	Industry Standard	32 mm/ Inch
			F - Throat Opening	Industry Standard	9 mm/ Inch
			G - Trunnion	Industry Standard	0.057 mm/ Inch
Aux. Ball	**Inspect Auxiliary ball for cleanliness, binding swivel, work pad-eye hole. Inspect the hook damage, excessive wear to the hook safety latch, Bent connector plates,Severe corrosion pitting, hook swivel trunnions, thrust collar, securing, damage or missing lubrication fittings,Loose, missing or damaged retaining nuts, cotter pins or swivel set screws ,Missing or illegible rating and warning tags, proper lubrication, cracks and gouges, and if visibly bent or twisted or has been exposed to welding or arching.**			Industry Standard	(✓) YES ( ) NO
	Hook: Tip has been bent more than 10 degree out of plane from the hook body			Industry Standard/API RP2D7	(✓) YES ( ) NO
	OEM STANDARD recommend that Crane overhaul ball removal from service untill replaced and repair following below			**OEM STANDARD**	
	- Elongated ball pin holes, hook latch pin holes and swivel eye exceeding 5% of original diameter,			OEM STANDARD	(✓) YES ( ) NO As found.....
	-Swivel end play gap exceeding .08". Excessive end play indicates damaged internal set screw			OEM STANDARD	(✓) YES ( ) NO As found.....
	-Material loss due to wear exceeding 10% of original section			OEM STANDARD	(✓) YES ( ) NO As found.....
	Throat opening - any distortion causeing an increase in throat opening of 5% not ot exceed 1/4 in. (6 mm.)(or as recommended by the manufacturer)			**ASME B30.10**	(✓) YES ( ) NO
	All hooks that lift personnel are to have a positive locking safety latch **locking Pin to be used while lifting personnel**			API RP 2D	(✓) YES ( ) NO
	*** Temperature Effected : When hooks are to be used at temperature above 400° F. (204°C) or below -40°F (-40°C), the hook manufacturer or a qualified person should be consulted *** Chemically Active Environment : The strength of hooks can be affected by chemically active environments, such as caustic or acid substances or fumes. The hook manufacturer or qualified person should be consulted before hooks are used in chemically active environment			**ASME B30.10**	
	Verify to ensure nut firmly at which trunion rotate. Identify to set-screw in nut/ swivel/ counter pin and thread condition.			Industry Standard	(✓) YES ( ) NO
	Last NDE Inspection record			Industry Standard	Last Inspect date 59
	RECORD AUX BALL INFORMATION :		Manufacturer:	OEM Manual	

[redacted] / 20 Feb 25

SYSTEM	TASK		Specification	Record/Reading
		Model:	OEM Manual	MC Wesson
		Serial Number:	OEM Manual	MB 07 / 15012
	Record Auxillary Ball measurements and details for future comparison with historical data: For Model MB07T200E ONLY		Industry Standard	
	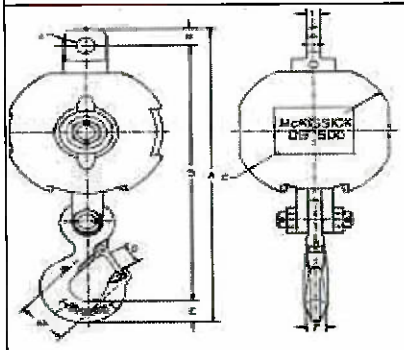	AA Dimensions 3.0 Inch	Industry Standard	3 mm/ Inch
		A Dimensions 24.89 Inch	Industry Standard	24 mm/ Inch
		B Dimensions 21.71 Inch	Industry Standard	21.7 mm/ Inch
		C Dimensions 12.50 Inch	Industry Standard	12.5 mm/ Inch
		D Dimensions 1.61 Inch	Industry Standard	1.6 mm/ Inch
		E Dimensions 1.81 Inch	Industry Standard	1.8 mm/ Inch
		F Dimensions 1.38 Inch	Industry Standard	1.3 mm/ Inch
		H Dimensions 1.38 Inch	Industry Standard	1.3 mm/ Inch
		I Dimensions 0.88 Inch	Industry Standard	0.8 mm/ Inch
		J Dimensions 1.31 Inch	Industry Standard	1.3 mm/ Inch
	Record Auxillary Ball measurements and details for future comparison with historical data: For Model OB 7EE 200-4		Industry Standard	
	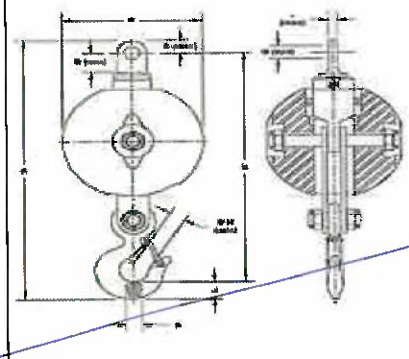	A Dimensions 27.25 Inch	Industry Standard	mm/ Inch
		B Dimensions 24.10 Inch	Industry Standard	mm/ Inch
		F Dimensions 12.00 Inch	Industry Standard	mm/ Inch
		H-H Dimensions 1.38 Inch	Industry Standard	mm/ Inch
		J Dimensions 1.81 Inch	Industry Standard	mm/ Inch
		K Dimensions 1.46 Inch	Industry Standard	mm/ Inch
		R Dimensions 1.55 Inch	Industry Standard	mm/ Inch
		S Dimensions 1.34 Inch	Industry Standard	mm/ Inch
		T Dimensions 1.03 Inch	Industry Standard	mm/ Inch
		U Dimensions 1.31 Inch	Industry Standard	mm/ Inch
Safety system	Check Condition anti - two block , hanging chain ,eye bolts , fix bolts , shackle for missing , corrosion , erosion , deformation		API RP 2D	(✓) YES ( ) NO
	Check anti - two block kick out plate for freely movement		Company Spec/Standard	(✓) YES ( ) NO
	Check anti-2-block device proper function of Main winch		Company Spec/Standard	(✓) Function ( ) False
	Check anti-2-block device proper function of Aux. winch		Company Spec/Standard	(✓) Function ( ) False
	Check relation of boom radius and boom angle (lowest, middle, highest) with refrence to load chart. Recharge fluid W-15 to load indicator, if required.		API RP 2D	(✓) YES ( ) NO
	Functional test of emergency lowering system (See procedure in Emergency Load Lowering Box). **Note:** Keep for 1 Yr PM to sustain crane mechanic competency. **Caution:** Function test must be performed on top deck with max 2-foot height.		Company Spec/Standard	(✓) YES ( ) NO ( ) N/A
	Visually check emergency load lowering kit. Ensure EMERGENCY LOWERING PROCEDURE and MATERIAL LIST are in the box. - Ensure ALL Items shown on the list are in the box and in good condition - **SECURE THE BOX WITH A TIE WRAP.**		Company Spec/Standard	(✓) YES ( ) NO ( ) N/A
Slew Mechanism	Visually check for damage and excessive wear on gear teeth		OEM Manual	(✓) YES ( ) NO
	Visually check slew gear box in the area of oil seal for any leaks		API RP 2D	(✓) YES ( ) NO
	RECORD SLEW GEAR BOX INFORMATION :	Manufacturer:	OEM Manual	ESK
		Model:	OEM Manual	150N-D1C1-35
		Serial Number:	OEM Manual	05591
	CHECK and RE-TORQUE swing drive gearbox mounting bolts at following brands: - ESKRIDGE, Model: 250 = 150 FT-LBS		API RP 2D	(✓) Yes ( ) No
	Check swing gearbox oil level/condition, top up if required	Meropa 220	OEM Manual	(✓) YES ( ) NO
	Monitor slew gearbox oil condition by visually examine for burnt smell, metal particles, and/or other contaminants, record and change if found.	Meropa 220	OEM Manual	(✓) CHANGE OIL ( ) NOT CHANGE OIL
	Change slew gear box oil	Meropa 220	OEM Manual	(✓) CHANGE OIL ( ) NOT CHANGE OIL
	Grease all pivot points of slew ring (bearing)		OEM Manual	(✓) YES ( ) NO
	Grease open gears (pinion)		OEM Manual	(✓) YES ( ) NO
	Rotate crane 360 degree and check smoothness of operation		OEM Manual	(✓) YES ( ) NO
	Check swing drive static parking brake for proper operation Caution: **DO NOT stop the swing of the crane with this static brake (parking brake)**		OEM Manual	(✓) YES ( ) NO
	Check swing drive dynamic parking brake for proper operation		OEM Manual	(✓) YES ( ) NO
	Check swing lock mechanism condition; corrosion ,dent , loos all part,worn and wear		OEM Manual	(✓) YES ( ) NO As found condition.....
	Check swing lock mechanism freely lock and unlock for function. **Check and inspect for hydraulic for leaks on actuator model.**		OEM Manual	(✓) YES ( ) NO As found condition.....
	Check condition of slew ring bolts e.g. Bolt grade and washers. Caution: Use only hardened flat washers under head of bolt. Do not use lock washers, or regular flat washers.		Industry Standard	(✓) YES ( ) NO As found condition.....

[redacted] / 20 Feb 25

SYSTEM	TASK		Specification	Record/Reading
	Check ball ring bolts torque (For American Aero ONLY) : After 3-4 hours, or initial "Run-In", and after every 500 operating hours, re-torque all of the bolts. Annually, or AFTER 2,000 Hours of Operation, re-torque the bolts. Criteria: If one or more bolts are found to be tightened to less than 80% of the prescribed pre-stress, that loosen bolt (s) should be replaced, in addition to the two adjacent bolts. If 20% of the total number of bolts are found to tightened to less than 80% of the prescribed pre-stress, replace all bolts (Pre-Load)		Company Spec/Standard	✓ YES ( ) NO
	Monitor ball-ring grease sample. If found wear and tear particles, take sample and send to lab. **Wear assessment by grease sample analysis—wear may be monitored by periodic grease sample analysis as describe in this section. Grease samples should be collected every twelve months as a minimum and the results of the analysis recorded; this period should be shortened if obvious metal or contaminants are present.		API RP 2D	( ) SEND TO LAB ✓ NOT SEND TO LAB As found.....
	Check ball ring bolts torque (For American Aero ONLY) : After 3-4 hours, or initial "Run-In", and after every 500 operating hours, re-torque all of the bolts.		Company Spec/Standard	✓ YES ( ) NO
		1236 ft-lbs	OEM Manual	✓ YES ( ) NO
		1236 ft-lbs	OEM Manual	✓ YES ( ) NO
	Check slew pinion back lash clearance, and record:		OEM Manual	
	RECORD MEASSUREMENTS: 0.019" Min/ 0.030" Max	0-North	OEM Manual	0.020 inch
		45-Northeast	OEM Manual	0.019 inch
		90-East	OEM Manual	0.015 inch
		135-Southeast	OEM Manual	0.018 inch
		180-South	OEM Manual	0.018 inch
		225-Southwest	OEM Manual	0.020 inch
		270-West	OEM Manual	0.020 inch
		315-Northwest	OEM Manual	0.020 inch
	RECORD SLEW RING INFORMATION :	Manufacturer:	OEM Manual	
		Model:	OEM Manual	N/A
		Serial Number:	OEM Manual	
	TORQUE WRENCH RECORD:	Torque Wrench S/N:	Industry Standard	
		Calibration Date:	Industry Standard	
	Perform ball ring deflection readings to check for bearing wear and record reading in below chart:		API RP 2D	( ) YES ( ) NO

Explain reason for No Bearing Deflection Reading: (IF N/A)		Applicable for Nautilus ONLY				
Boom Position	Boom Rest	Water Side	180 Degrees From Boom Rest	180 Degrees from Water Side	Grease Samples Positions	
0-North	0	0	0	0	0	
45-Northeast	0	0	0	0	45	
90-East	0	0	0	0	90	
135-Southeast	0	0	0	0	135	
180-South	0	0	0	0	180	
225-Southwest	0	0	0	0	225	
270-West	0	0	0	0	270	
315-Northwest	0	0	0	0	315	
360-North	0	0	0	0	360	

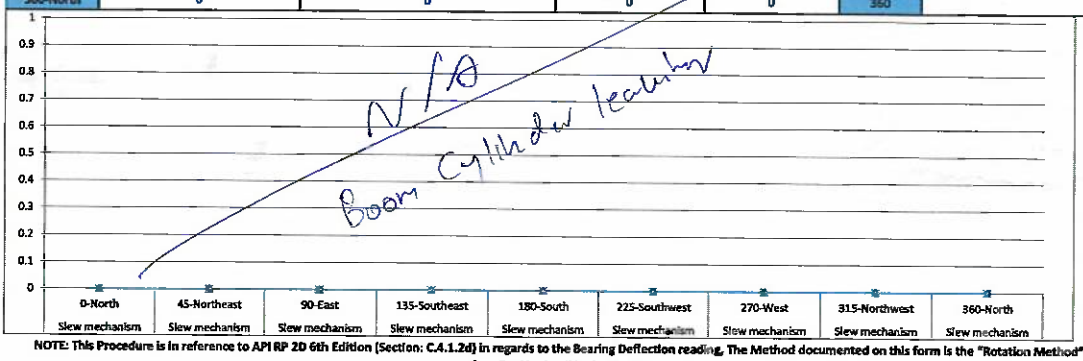

NOTE: This Procedure is in reference to API RP 2D 6th Edition (Section: C.4.1.2d) in regards to the Bearing Deflection reading, The Method documented on this form is the "Rotation Method" as described in detail in the API RP 2D

Review with previous PM inspection report for signs of irregularities or increased wear.		API RP 2D	( ) YES ( ) NO
The permissible bearing wear for the swing bearing to be used as a guideline ** Note ; If the initial bearing clearance (bearing defection) is not know the absolute maximum permissible clearance(or wear) for the bearing is: 0.120 Inch (3.05 mm)	< 0.134 Inch	OEM Manual	_____Inch
Verify crane condition and load test as separate procedure.		API 2C	( ) YES ( ) NO Specific test load.....lbs.
Verify crane condition and load test as separate procedure. " Record crane load test in load test form."		Company Standard	( ) YES ( ) NO

Table 1—Static/Onboard Test Load and Radius

Static/Onboard Rated Load at a Specific Radius lb (kg)	Test Loads in Excess of Static/Onboard Rated Load at a Specific Radius
≤ 40,000 (18,144)	25 %
> 40,000 ≤ 100,000 (> 18,144 ≤ 45,356)	10,000 lb (4536 kg)
> 100,000 (45,356)	10 %

Risk Level Definitions: The following 3 levels indicate the impact the noted deficiency poses to the operation or structural integrity of the equipment:

Level 1 = Incidental	Level #2 = Restricted Operation	Level #3 =Out of Service
Minor deficiency that is recommended to be promptly addressed, but poses no safety and/or environmental risk. The crane can still be operated at full duty.	Deficiency identified that has the potential to limit, de-rate or damage the crane, its surroundings and/or the environment. The duty and locked/ tagged out until the crane's duty and operation should be de-rated or service restricted.	The crane should be removed from duty and locked/ tagged out until the deficiency is rectified.

System:	Risk Level:	Component:		In Accordance with:	
		Location:		Date Originated:	
Description:					

[redacted] / 20 Feb 25

File

SYSTEM	TASK	Specification	Record/Reading
Recommended Action:			
Recommended urgency timeframe for corrective action:	Completed Date:	Completed By:	

System:	Risk Level:	Component: / Location:	In Accordance with: / Date Originated:
Description:			
Recommended Action:			
Recommended urgency timeframe for corrective action:	Completed Date:	Completed By:	

System:	Risk Level:	Component: / Location:	In Accordance with: / Date Originated:
Description:			
Recommended Action:			
Recommended urgency timeframe for corrective action:	Completed Date:	Completed By:	

System:	Risk Level:	Component: / Location:	In Accordance with: / Date Originated:
Description:			
Recommended Action:			
Recommended urgency timeframe for corrective action:	Completed Date:	Completed By:	

System:	Risk Level:	Component: / Location:	In Accordance with: / Date Originated:
Description:			
Recommended Action:			
Recommended urgency timeframe for corrective action:	Completed Date:	Completed By:	

System:	Risk Level:	Component: / Location:	In Accordance with: / Date Originated:
Description:			
Recommended Action:			
Recommended urgency timeframe for corrective action:	Completed Date:	Completed By:	

Job Completed By: [redacted]

BEWK

Sheet: 180B-80 Eng 3406_Rev.2024

CRANE Mfg. : Nautilus 3Y crane PM

MODEL: 180B-80

SERIAL NUMBER :

LOCATION 4871 HR

BEWK

DATA BASE - PM JOB TASK CARD

WO:1244767

Crew Size: 4

Estimated Hours:

SYSTEM	TASK		Specification	Record/Reading
Safety	Perform Job Safety Analysis (JSA)		Company Spec/Standard	(/) YES ( ) NO
	Obtain "COMPANY' PERMIT TO WORK		Company Spec/Standard	(/) YES ( ) NO
	Perform Tool Box Talk		Company Spec/Standard	(/) YES ( ) NO
	BEFORE/AFTER JOB EXECUTION: Ensure to comply with isolation procedure (LOCK OUT/TAG OUT, WARNING SIGNS and BARRIERS).		Company Spec/Standard	(/) YES ( ) NO
Required Tools	Insure proper tools are available at the job site		Company Spec/Standard	(/) YES ( ) NO
	Tool bag		Company Spec/Standard	(/) YES ( ) NO
	Tool box		Company Spec/Standard	(/) YES ( ) NO
	Tool Container		Company Spec/Standard	(/) YES ( ) NO
	MPI equipment and operator		Company Spec/Standard	(/) YES ( ) NO
	Check safety harness Software and Hardware should be good condition before use		Company Spec/Standard	(/) YES ( ) NO
	Check Rescue Equipment ready to use onsite		Company Spec/Standard	(/) YES ( ) NO
	Portable Scaffolding and Crew if require		Company Spec/Standard	(/) YES ( ) NO
Lubricants	Insure proper lubricants and consumables are available at the job site.		Company Spec/Standard	(/) YES ( ) NO
	Hydraulic System - Hydraulic Oil	Rando HD-68	OEM Manual	(/) YES ( ) NO
	Slew Gearbox - Gear Oil	Meropa 220	OEM Manual	(/) YES ( ) NO
	Auxiliary Hoist - Gear Oil	Meropa 220	OEM Manual	(/) YES ( ) NO
	Main Hoist - Gear Oil	Meropa 220	OEM Manual	(/) YES ( ) NO
	Grease Points - Lithium Based **IT MUST NOT INCLUDE MOLYBDENUM DISULPHIDE**	MULTIFAK EP#2	OEM Manual	(/) YES ( ) NO
	Open Gear Teeth - Open Gear Lube highly water resistant and of an adhesive nature.	OMEGA 73	OEM Manual	(/) YES ( ) NO
	Wire rope Lubricant Company preferred grade	Birlube 70	OEM Manual	(/) YES ( ) NO
	Engine Oil - SAE Grade 15W-40 (Delo Gold)	15W-40	OEM Manual	(/) YES ( ) NO
	Safe Load Indicator fluid	W-15	OEM Manual	(/) YES ( ) NO
	Engine Radiator - Should have radiator preservatives additives	Cat® SCA	OEM Manual	(/) YES ( ) NO
Consumables	Spray Cold Galvanize		Company Spec/Standard	(/) YES ( ) NO
	Denso Tape		Company Spec/Standard	(/) YES ( ) NO
	WD-40		Company Spec/Standard	(/) YES ( ) NO
History Review	Before starting work, tasks preparation at least 1 day prior to starting work: 1. Review history PM/ CM from Roving Team, 2. Review last PM/ CM/ PMI from Crane Mech, 3. List out all punch list and prepare parts. 4. Review last Certificate task performed		API RP 2D	(/) YES ( ) NO
	Require to update part history from Crane Mech on following main compenents to ensure the right parts are prepared: - Aux/ Main/ Boom Cylinder, Engine, Swing Gearbox, etc. Reference: Crane OEM information of each part need to be recorded - Manufacturer & Contact info - Model & serial number - Installation date		Company Spec/Standard	(/) YES ( ) NO
	Review history data from Certificates and incorporate into current PM: - Pull Test Certificates (ongoing update, 4 yr. history). - Load Test Certificates (ongoing update, 4 yr. history). - Wire Rope Certifications (running rope and standing rope) (life of rope). - Hoist Certifications for hoist classified as "personnel handling" hoist.		API RP 2D	(/) YES ( ) NO
	Review Last Preventative Maintenance Records (Inspection Reports) - Pre-use (Pre-Post Inspection) - 6 Monthly (API RP 2D Not Defined, Company Standard) - 1 Yearly (API RP 2D Defined Annual Inspection)		API RP 2D	(/) YES ( ) NO
Lifting Gear Preparation	Visually Inspect (Sling, sling hooks and shackles) include Websling / Chain		Company Spec/Standard	(/) YES ( ) NO
	Check color code / Tag & date inspection		Company Spec/Standard	(/) YES ( ) NO
General	Determine if access route to-from crane is clean, safe, unobstructed and adequately protected against falls, tripping and slipping		Company Spec/Standard	(/) YES ( ) NO
	Check drain lines and drip pans for deterioration		API RP 2D	(/) YES ( ) NO
	Remove any sediment collected in the bottom of drip pans		Industry Standard	(/) YES ( ) NO
	Check for general crane and components for loss of protective coating and corrosion		Industry Standard	(/) YES ( ) NO
	Check for missing or loose ,corrosion, deformation pins, pin keepers, bolts, nuts, fasteners of all laders, cages and working platform		API RP 2D	(/) YES ( ) NO
	Apply grease to exposed grease parts (control valve spools, ball-ring gear, parking brake valve, etc.)		OEM Manual	(/) YES ( ) NO
Prime Mover	Engine Caterpillar		OEM Manual	(/) YES ( ) NO
	CATERPILLAR MODEL 3406	S/N.:	OEM Manual	6TB91677
		AR.No.:	OEM Manual	4N3718
	Change engine lube oil & oil filter and check the condition of old oil. As found ;		OEM Manual	(/) YES ( ) NO
	Check diesel tank level, top up if required.		OEM Manual	(/) YES ( ) NO
	Check / Clean crankcase breather cap. Change if required		OEM Manual	(/) YES ( ) NO
	Check / Clean air cleaner filter, Replace if require. (Note : Include inspect air cleaner housing)		OEM Manual	(/) YES ( ) NO
	Check condition and inspect of the radiator and cap.		OEM Manual	(/) YES ( ) NO
	Check for any signs of leaks on or around the engine ie; Crankshaft seal for front & rear seal , Engine oil cooler. As found;		OEM Manual	(/) YES ( ) NO
	Check condition exhaust system for leaks, corrosion, insulation and general. As found ;		OEM Manual	(/) YES ( ) NO
	Check condition of all engie hoses and tube. (Fuel supply,Cooling system and Lube oil system. As found;		OEM Manual	(/) YES ( ) NO
	Drain water and sediment form diesel tank. As found ;		OEM Manual	(/) YES ( ) NO
	Check / Clean Diesel tank level sightglass and diesel tag.		OEM Manual	(/) YES ( ) NO
	Apply grease of fan bearing/shaft.		OEM Manual	(/) YES ( ) NO
	Check and inspect the vibration damper and pulley. As found ;		OEM Manual	(/) YES ( ) NO
	Change water coolant and check condition base of water coolant and record PH.		OEM Manual	(/) YES ( ) NO
	COOLANT PARAMETERS (PH):	6 or higher	OEM Manual	PH = 8
	HOUR METER PARAMETERS:	LAST READING _____ HRS	OEM Manual	4871 HRS
	Check and retigthen the bolts of all engine base. / Inspection mouting rubber. As found ;		OEM Manual	(/) YES ( ) NO

[redacted] / 31/10/25.

SYSTEM	TASK			Specification	Record/Reading
	Inspect the engine fan blades that there is a break is it severely distorted or rusted. As found ;.....			OEM Manual	(✓) YES ( ) NO
	Change and adjust the tension engine belts. Remark; To check belt Tension, after has engine run more than 30 minules apply 400 N (90 lbs) of force midway between the pulleys. Correctly adjusted belts with deflect 13 to 19 mm (1/2 to 3/4 inch).			OEM Manual	(✓) YES ( ) NO
	Check engine HYD starter drive gear bendix and fly wheel gear teeth condition and record. **Replace if required"			OEM Manual	(✓) YES ( ) NO Bendix Gear : 90 % Fly wheel Gear teeth : 90 %
	Check and inspect condition the Bendix of hydraulic Starter motor.			OEM Manual	(✓) YES ( ) NO
	Lubricate and check engine throttle system.			OEM Manual	(✓) YES ( ) NO
	Determine if the tachometer operates properly: Record Value of Idle & Max Speed (RPMs) Note: Too low idle (RPMS) will cause excessive worn at winch brake			OEM Manual	
	ENGINE RPM SPECIFIC	IDLE SPEED	850-950 RPM	OEM Manual	850 RPM
		MAX SPEED	2200 RPM	OEM Manual	2200 RPM
	Confirm engine oil pressure as per Parameters below and Record Value:			OEM Manual	
	ENGINE OIL PRESSURE SPECIFIC	Minimum	Not lower then 30 PSI	OEM Manual	40 PSI
		Maximum	70 PSI	OEM Manual	60 PSI
	Confirm engine fuel pressure Parameters are correct and Record Value:			OEM Manual	
	ENGINE FUEL PRESSURE SPECIFIC** ***Note;Fuel pressure at high idle is lower than 105 kPa (15 psi)RAMETERS*	Normal	>35 PSI.	OEM Manual	(✓) YES ( ) NO
	Confirm engine temperature Parameters and Record Value:			OEM Manual	
	ENGINE WATER TEMP SPECIFIC	NORMAL	120 - 180 degrees F	OEM Manual	160 F
	Test engine SAFETY DEVICE- ensure engine kill cable shuts off FUEL supply			API RP 2D	(✓) Function ( ) False
	Test engine SAFETY DEVICE- ensure EMERGENCY KILL CABLE - shuts off AIR supply			API RP 2D	(✓) Function ( ) False
	Test engine SAFETY DEVICE- ensure ENGINE low lube oil - releases OIL PRESSURE to activate shuts off engine ****Note*** Engine oil pressure low alarm at 20 PSI*			Company Spec/Standard	( ) Function ( ) False N/A
	Test engine SAFETY DEVICE- ensure HIGH TEMP - releases OIL PRESSURE to activate shuts off engine			Company Spec/Standard	( ) Function ( ) False N/A
	Change water separator filter.			OEM Manual	( ) YES ( ) NO N/A
	Check the general conditionand functioning of turbocharger. Note;			OEM Manual	( ) Leak (✓) Not Leak
	Change fuel filter and inspect the primary hand pump.			OEM Manual	(✓) YES ( ) NO
	Check water temperator regulator.(Thermostat). Change if require refer from cooling temperature.			OEM Manual	(✓) YES ( ) NO
	Check general condition the Governor and control linkage. (Inspect the throtle linkage)			OEM Manual	(✓) YES ( ) NO
	Check or adjust the engine valve lash and bridge valve. (Intake vale = 0.015", Exhaust valve = 0.030")			OEM Manual	(✓) YES ( ) NO
	Check condition wear of pump drive spline and record ***Note; Remaining 70% of Original Spline Surface must be replace.*			Company Spec/Standard	90 % Remaining
	Check condition wear of adaptor Coulping spline shaft and record ***Note; Remaining 70% of Original adaptor Coulping spline shaft Surface must be replace.*			Company Spec/Standard	90 % Remaining
	Check condition wear of Coulping spline and record. Re-tigthen of all lock bolts. ***Note; Remaining 70% of Original adaptor Coulping spline shaft Surface must be replace.*			Company Spec/Standard	90 % Remaining
Hydraulic Start System (Apply for C2-Remote P/F Only)	Check pressure system at the pressure gauge which should reach 3,000 PSI as standard when the system is FULLY charged. Record Value. (As the system cools down, the pressure should drop slightly and finally stabilised.)			OEM Manual	(✓) YES ( ) NO
	Visually inspect all hydraulic connections and hoses for leaks and retighten if necessary. (Caution: This should NOT be done if the system is under pressure.) 1. Slowly release system pressure by loosening the bleed screw on top of the hand pump. 2. Ensure no pressure remains, retighten the suspected leak fitting or replace the damaged hose or component. 3. Retighten the bleed screw on the hand pump. 4. Pump the system up to 2200 - 2600 PSI 5. Inspect that the leak was eliminated.			OEM Manual	(✓) YES ( ) NO
	Function check Accumulator Pre-charge. (Caution: This should NOT be done if the system is under pressure.) 1. Shut the engine off, release system pressure via the bleed screw on top of the hand pump 2. Retighten bleed screw and actuate the hand pump. The pressure will rapidly increase and then stabilised. This pressure is related to accumulator gas pre-charge pressure. 4. If the pressure rapidly increase to 3000 PSI, it indicates that the accumulator has lost its gas charge. 5. Troubleshoot as necessary			OEM Manual	(✓) YES ( ) NO
	Check function rechaging system by function boom down while the engine running. 1. The crane engine is running at 1,000-1500 RPM. 2. Slowly control lever boom function down for charging pressure to accumulator. 3. This pressure should read on prssure gauge between 2200 - 2600 PSI depending on the recharge ratio 80% std. (90% optional). Record Pressure Value.			OEM Manual	2800 PSI
	Check Nitrogen pressure in Accumulator ***Note**spec @ 1,500 psi as follow schematic and if found pressure loss below 1400 PSI then prepare recharge nitrogen in system			OEM Manual	1500 PSI
	Every 36 months or 2000 engine running hours (approximately 1500 starts) replace the high pressure filter.			OEM Manual	(✓) YES ( ) NO
Hoist / Brakes	Visually check a hoist exhibits erratic operation and/or unusual noise, the hoist must be taken out of service until it is inspected and serviced by a qualified technician. Continued operation of a hoist with a defect in a critical component may lead to loss of load control, property damage, serious injury or death.			OEM Manual	(✓) YES ( ) NO
	Visual exteriors of hoist, frames, drums and flanges for damage, leaks, cracks and wear and repair/replace as required to maintain the structural integrity of the hoist.			OEM Manual	(✓) YES ( ) NO
	Check all hoist mounting pins, bolts or other fasteners and replace or tighten as necessary.			OEM Manual	(✓) YES ( ) NO
	Lubricant level must be maintained between the minimum and maximum levels; midway up sight glass or at bottom of level plug port as equipped and check/clean plug vent. Use only the recommended type of lubricant.			OEM Manual	(✓) YES ( ) NO
	Inspect Brake Valve Opening Pressure test V/V 1-1/4" PD Series : no lower than 550 PSI V/V 1-1/2" CH Series : no lower than 575 PSI	Main		Braden Bulletin 527-Dec,1996	600 PSI
		Aux			600 PSI
	Inspect Brake cylinder opening pressure test. CH/PD Series : 400-450 PSI.	Main		Industry Standard	450 PSI
		Aux			450 PSI
	Measure differancian of static and dynamic brake. CH/PD Series : 150-250 PSI.	Main		Industry Standard	250 PSI
		Aux			250 PSI
	Check for external oil leaks and repair as necessary. This is extremely important due to the accelerated wear that will result from insufficient lubricating oil in the hoist.			OEM Manual	(✓) YES ( ) NO
	RECORD BOOM CYLINDER INFORMATION :	Boom cylinder Diameter:		OEM Manual	DIA: 12 Inch
		CY Number:		OEM Manual	L= 6169-86 R= 6169-86
		Serial Number:		OEM Manual	L= 5237 R= 5235
	RECORD MAIN HOIST INFORMATION :	Manufacturer:		OEM Manual	Braden
		Model:		OEM Manual	CH 210 A - 3699-8-9

[redacted] / 31/05/25.

SYSTEM	TASK			Specification	Record/Reading
			Serial Number:	OEM Manual	03000560
	Check MAIN HOIST for proper operation and good condition			API RP 2D	(✓) YES ( ) NO
	Brake test & record pressure of MAIN HOIST.			OEM Manual	(✓) YES ( ) NO As found a
	Change main hoist gear oil and inspect for small particles in the old oil. ** Refer to Onsite Gear Oil Sample Procedure ** ** Replace and send oil sample to SKL if abnormal ** ** Take photo of Oil Sampling for Reference**			OEM Manual	(✓) YES ( ) NO As found
	RECORD AUXILIARY HOIST INFORMATION :		Manufacturer:	OEM Manual	Braden
			Model:	OEM Manual	CH 150A-93110-01a
			Serial Number:	OEM Manual	03007786
	Check AUXILIARY HOIST for proper operation and good condition			API RP 2D	(✓) YES ( ) NO
	Brake test & record pressure of AUXILIARY HOIST			API RP 2D	(✓) YES ( ) NO
	Change Aux. hoist gear oil and inspect for small particles in the old oil. ** Refer to Onsite Gear Oil Sample Procedure ** ** Replace and send oil sample to SKL if abnormal ** ** Take photo of Oil Sampling for Reference** Please record if any abnormal condition. Note.....			OEM Manual	(✓) SEND SKL LAB (✓) NOT SEND SKL LAB
	Check pressre relief Valve: Determine hoistes' relief valve pressure gauge is working and giving accurate measurement by notice whether pressure gauge is vibrating or not. if not, set relief valve pressure in accordance with the schematic and parameters below. Record all readings.			OEM Manual	(✓) YES ( ) NO
	BOOM RELIEF VALVE TEST	Relief Specific:	3,000 PSI	OEM Manual	3000 PSI
	MAIN HOIST RELIEF VALVE TEST	Relief Specific:	2,575 PSI	OEM Manual	2575 PSI
	AUX HOIST RELIEF VALVE TEST	Relief Specific:	2,800 PSI	OEM Manual	2800 PSI
	SWING RELIEF VALVE TEST	Relief Specific:	1,500 PSI	OEM Manual	1500 PSI
	Measure Pressure of hoist motor case drains and Record Value Reference Bulletin: BRADEN Inspection, Testing, Preventive Maintenance and Special Operating Instructions For Planetary Hoists PB-308 latest edition for further details.			OEM Manual	
	MAIN HOIST CASE DRAIN for Gear Motor (Down Mode).	PRESSURE	< 100 psi	Company Spec/Standard	10 PSI
	AUX. HOIST CASE DRAIN for Gear Motor (Down Mode).	PRESSURE	< 100 psi	Company Spec/Standard	15 PSI
Hydraulic System	Check hydraulic tank oil level. Oil should be visible in the sight glass. Top up as required (3/4 Tank Minimum)			OEM Manual	(✓) YES ( ) NO
	Check hydraulic oil condition. (Check if running hours are more than 100 hours from last oil change or during Annual inspection) ** Refer to Onsite Hydraulic Oil Sample Procedure ** ** Replace and send oil sample to SKL if abnormal ** ** Take photo of Oil Sampling for Reference**		Rando HD-68	Company Spec/Standard	( ) SEND SKL LAB (✓) NOT SEND SKL LAB
	Inspect hydraulic tank and strainer filter. Change hydraulic oil, If required with lab confirmation.			Company Spec/Standard	(✓) YES ( ) NO
	Drain off 1 liter of oil to remove condensed water. If water is present, drain until water is removed and top up with clean oil			Industry Standard	(✓) YES ( ) NO
	Check for any hydraulic leaks			Industry Standard	(✓) YES ( ) NO
	Check the hydraulic hose, piping and tubing for mechanical damage, corrosion, splits, blisters, cracking or excessive abrasion on the outer surface			API RP 2D	(✓) YES ( ) NO
	Check that all hydraulic hose connections are sound and that all mounting and pivoting connections are secure.			Industry Standard	(✓) YES ( ) NO
	Lubricate hydraulic swivel in pedestal and insure tie down restrains are in place and preventing the swivel from rotating with the crane structure.			OEM Manual	(✓) YES ( ) NO
	Ensure the filler breather on tank is not covered or clogged			Industry Standard	(✓) YES ( ) NO
	Visually inspect for missing or loose pins, pin keepers, bolts, nuts, fasteners on all pumps, motors and valves			API RP 2D	(✓) YES ( ) NO
	* Re-tighten the stud bolt of hydraulic main pump and marking the nut for checking to prevent loosening. Note : Torqe spec model P76, P75, PGP/PGM350 ,PGP/PGM330 = 200 ft-lbs. , for model PGP/PGM315 = 140 ft-lbs. and PGP/PGM365 = 450 ft-lbs.			The Commercial Intertech manual	(✓) YES ( ) NO
	Check the filter bypass indicator, while engine is running			OEM Manual	(✓) YES ( ) NO
	With engine running (after all other items pass inspection), check the system for leaks around fittings, hoses, valves and reservoirs			Industry Standard	(✓) YES ( ) NO
	With engine running, check the source of any unusual noise or vibration that may cause or indicate equipment damage or wear			Industry Standard	(✓) YES ( ) NO
	Ensure all hoses are properly rated for the system, see "Parameters" for each system for details.			Industry Standard	(✓) YES ( ) NO
	Record hydraulic oil operating temperture. Note: Hydraulic fluid overheating temperature is over 180 F degrees or 82 C, degrees (reservoir temperature)			Industry Standard	160 Degree F
	Determine if hydraulic return pressure gauge is working and giving accurate measurements. Record readings				
	RECORD HYDRAULIC RETURN PRESSURE PARAMETERS:		60 PSI "maximum"	OEM Manual	65 PSI
	Check and inspect the hydraulic return filters and seals.			OEM Manual	( ) YES ( ) NO
	Function Testing and record pressures with engine at :		2,200 RPM	API RP 2D	
	BOOM FUNCTION TEST (Need Crane Mech to verify each platform)			OEM Manual	
	Boom Angle : 60 Degree (Recommend or as applicable)	UP	Cracking pressure	RECORD	OEM Manual 650 PSI
			Full Speed Pressure	RECORD	OEM Manual 900 PSI
		DOWN	Cracking pressure	RECORD	OEM Manual 1200 PSI
			Full Speed Pressure	RECORD	OEM Manual 1600 PSI
	MAIN HOIST FUNCTION TEST (Need Crane Mech to verify each platform)			OEM Manual	
	Boom Angle : 60 Degree (Recommend or as applicable)	UP	Cracking pressure	RECORD	OEM Manual 300 PSI
			Full Speed Pressure	RECORD	OEM Manual 650 PSI
		DOWN	Cracking pressure	RECORD	OEM Manual 1000 PSI
			Full Speed Pressure	RECORD	OEM Manual 1200 PSI
	AUX HOIST FUNCTION TEST (Need Crane Mech to verify each platform)			OEM Manual	
	Boom Angle : 60 Degree (Recommend or as applicable)	UP	Cracking pressure	RECORD	OEM Manual 600 PSI
			Full Speed Pressure	RECORD	OEM Manual 800 PSI
		DOWN	Cracking pressure	RECORD	OEM Manual 900 PSI
			Full Speed Pressure	RECORD	OEM Manual 1200 PSI

[redacted] / 31/5/25.

SYSTEM	TASK				Specification	Record/Reading
	SWING FUNCTION TEST (Need Crane Mech to verify each platform)				OEM Manual	
	Boom Angle : 60 Degree (Recommend or as applicable)	LEFT	Cracking pressure	RECORD	OEM Manual	400 PSI
			Full Speed Pressure	RECORD	OEM Manual	600 PSI
		RIGHT	Cracking pressure	RECORD	OEM Manual	400 PSI
			Full Speed Pressure	RECORD	OEM Manual	600 PSI
Electrical system, Crane Boom Lighting and red obstruction light	Check the electrical junction boxes, wires and connections for deterioration, desiccant bags, (replace as required)				Industry Standard	(✓) YES ( ) NO
	Check the condition of the grounding and lighting protection system.				Company Spec/Standard	(✓) YES ( ) NO
	Visually inspect boom floodlight and light guards for loose, missing, corroded				Company Spec/Standard	(✓) YES ( ) NO
	Check condition pipe support , U-bolt ,nuts of boom floodlight and Electric slipring for loose , missing , corroded				Company Spec/Standard	(✓) YES ( ) NO
	Check Electric slipring/swivel for 360° continuous rotation				OEM Munnal	(✓) YES ( ) NO
	Check Water ingress, condensation in electric slipring, red obstruction light and boom floodlight				OEM Munnal	(✓) YES ( ) NO
	Check feely movement and lubricate of boom floodlight				OEM Munnal	(✓) YES ( ) NO
	With generator in operation, intergize all lights to unsure proper function.				API RP 2D	(✓) YES ( ) NO
	Check condition of crane boom lighting and safety net is secured with strong point. * **Safety net should be replace 24 months after installation (2 year)***	Last installation date _____			Company Spec/Standard	(✓) YES ( ) NO
	Check function of crane sound signal				Company Spec/Standard	( ) YES ( ) NO (✓) N/A
	Check function of crane boom lighting at boom upper section				Company Spec/Standard	( ) YES ( ) NO (✓) N/A
	Check function of crane boom lighting at boom lower section	AR platform			Company Spec/Standard	( ) YES ( ) NO (✓) N/A
	Check function of crane boom lighting at winch skid				Company Spec/Standard	( ) YES ( ) NO (✓) N/A
	Check function of crane boom lighting at crane cabin				Company Spec/Standard	( ) YES ( ) NO (✓) N/A
	Check function becon light at boom tip				Company Spec/Standard	( ) YES ( ) NO (✓) N/A
	Inspection wire rope guide & Roller assembly				Company Spec/Standard	(✓) YES ( ) NO
	Visually inspect red obstruction light pipe support, u-bolts, nuts connection to hand rail for loose, missing, corroded				Company Spec/Standard	(✓) YES ( ) NO
	Visually inspect safety sling attached to the red obsruction light and its base for loose, missing, corroded				Company Spec/Standard	(✓) YES ( ) NO
	Visually inspect red obstruction light function. The light is designed to turn on all the time.				Company Spec/Standard	(✓) YES ( ) NO
Operator Control Station	Check general condition of control panel, bolts, paint security, etc.				API RP 2D	(✓) YES ( ) NO
	Determine if there is a serviceable fire extinguisher in the vicinity of the crane				Company Spec/Standard	(✓) YES ( ) NO
	Determine if correct load chart is in use and easily visible for operator				API RP 2D	(✓) YES ( ) NO
	Determine if charts, indicators and hand signal chart are in the cabling and firmly attached				API RP 2D	(✓) YES ( ) NO
	Determine if angle/radius indicator plate is easily visible to operator and is moving freely.				API RP 2D	(✓) YES ( ) NO
	Check condition of control levers and determine if they "dead-man" back to the neutral position.				API RP 2D	(✓) YES ( ) NO
	Check condition of pressure gauges.				API RP 2D	(✓) YES ( ) NO
	Check proper control labels are firmly installed, completely legible and properly labeled				API RP 2D	(✓) YES ( ) NO
	Check controls for freedom-of-movement				API RP 2D	(✓) YES ( ) NO
	Check condition , Leak, freely moement of Dynamic swing break system *** Note; If HYD Oil loose in CYD reservoir must be refill*				OEM Manual	(✓) YES ( ) NO
	Check condition , Leak, freely moement of Accelerate System *** Note; if HYD Oil loose in CYD reservoir must be refill*				OEM Manual	(✓) YES ( ) NO
	Check all safety glass and rubber seal for proper condition				API RP 2D	(✓) YES ( ) NO ( ) N/A
	Function Test Horn. Note;.....				Industry Standard	(✓) YES ( ) NO ( ) N/A
	Ensure PRE/POST Check List and Pocket Manual in the cabin. Note;.....				Company Standard	(✓) YES ( ) NO ( ) N/A
Load Indicator System	Visual check on fittings and connections for leaks. Fix leak if any. Note;.....				OEM Manual	(✓) YES ( ) NO
	Should any leaks exist, stop leak and recharge system, refer to maintenance manual				OEM Manual	(✓) YES ( ) NO
	Change and flushing Load cell fluid.				OEM Manual	(✓) YES ( ) NO
	Check general condition of tubbing, hoses, pins bolts, paint, etc.				Industry Standard	(✓) YES ( ) NO
	Insure load cell is free of obstructions				OEM Manual	(✓) YES ( ) NO
	Check condition of gauge(s) face and clean glass as required.				OEM Manual	(✓) YES ( ) NO
	Check the scale's operation and weighing accuracy. (Main Hoist) Remark : Maximum variance +/- 2% Note;.....				Company Spec/Standard	(✓) YES ( ) NO ( ) N/A
	Check the scale's operation and weighing accuracy. (Aux. Hoist) Remark : Maximum variance +/- 2% Note;.....				Company Spec/Standard	(✓) YES ( ) NO ( ) N/A
	Check the internal casting fluid of weight indicator. top up if required				Industry Standard	(✓) YES ( ) NO ( ) N/A
	Insure SWL tag matches ratings on the Crane Load Chart.				OEM Manual	(✓) YES ( ) NO ( ) N/A
	Insure Boom Length, matches the Crane Load Chart				OEM Manual	(✓) YES ( ) NO ( ) N/A
	Insure Boom Angle measurements and readings match the boom angle indicator.				OEM Manual	(✓) YES ( ) NO ( ) N/A
	Insure Boom Radius measurements indicate the distance from center line of the crane to the hook				OEM Manual	(✓) YES ( ) NO ( ) N/A
	Check Main load cell gap 1/4 (0.250) inch				OEM Manual	(✓) YES ( ) NO ( ) N/A
	Check Aux load cell gap 3/8(0.380) inch (Compression Load Cell Type)				OEM Manual	(✓) YES ( ) NO ( ) N/A
Pedestal & Structure	Visually check Pedestal for chipped/cracked paint, deformation, worn parts, dents, corroded areas, cracks weld, etc.				API RP 2D	(✓) YES ( ) NO
	Check water rain drain at pedestal must be not obstuct				Industry Standard	(✓) YES ( ) NO
	Check pin and cotter pin of pedestal missing , corrosion, wear, damage and exercise pin.				Industry Standard	(✓) YES ( ) NO
	Visually check Base - Plate connection and Base hoist Structure for chipped/cracked paint, deformation, worn parts, dents, corroded areas, cracks weld, etc.				API RP 2D	(✓) YES ( ) NO
	Check A fixed such as Handrial, Walkway, Grating, stationary structure without significant movement in response to waves and currents in normal operating conditions.				API RP 2C	(✓) YES ( ) NO
	Visually check and lubricate maintenance Jib. ***Note*** If on pedestal crane				OEM Manual	(✓) YES ( ) NO ( ) N/A
	Check maintenance jib is secure firmly. ***Note*** If on pedestal crane				OEM Manual	(✓) YES ( ) NO ( ) N/A
Box Boom & Luffing CYD	Check and Verify entire box boom and Boom CYD for loss of protective coating and corrosion. Note;.....				API RP 2D	(✓) YES ( ) NO
	Check and Verify entire box boom and Boom CYD for chipped/cracked paint, deformation, worn parts, dents, corroded areas, cracks, etc. Note;.....				API RP 2D	(✓) YES ( ) NO
	Check and Verify boom end connections, for bends, dents, corroded areas, cracked welds, and signs of mechanical damage, wear, etc. **any deviation should be reported**				API RP 2D	(✓) YES ( ) NO
	Check and Verify boom rest and wooden support to ensure it's in good condition				API RP 2D	(✓) YES ( ) NO

[redacted] / 31/5/25

SYSTEM	TASK	Specification	Record/Reading
	Inspect pin and pin holes of Upper tank and Lower tank for excessive clearance	OEM Manual	(✓) YES ( ) NO
	BOOM CYLINDER PIN MAXIMUM TOLERANCE — 0.125 Inch (3mm)	Industry Standard	As found.....
	Check BOOM CYLINDERS for proper operation and good condition	API RP 2D	(✓) YES ( ) NO
	Check Boom cylinder barrels and rods for leaks, mechanical damage and corrosion	Industry Standard	(✓) YES ( ) NO
	Check and measurement boom foot pin and connection pins for clearance	Industry Standard	
	BOOM FOOT PINS & BOOM BOX CONNECTER PIN TOLERANCE — 0.125 Inch (3mm)	Industry Standard	
	Boom Foot Pin Tolerance	Industry Standard	Visual inch
	Boom Box Connecter Pin Tolerance	Industry Standard	Visual inch
	Check connecting bolts of box boom loose, corrosion, wear, damage	OEM Manual	(✓) YES ( ) NO
	Lubricate boom foot pins and bushings	OEM Manual	(✓) YES ( ) NO
	Lubricate boom cylinder pins, bearings and bushings	OEM Manual	(✓) YES ( ) NO
	Boom function test angle/radius to correction **Note; The cylinder(s) mechanism shall be capable of elevating the boom from a minimum of zero degrees to the maximum recommended boom angle.	API RP 2C	(✓) YES ( ) NO
	Operation functional test and verify Boom Creeping down **Note ; Test at angle 60 °	Industry Standard	(✓) YES ( ) NO As found No creeping down
Wire Rope	Determine if parts-of-line match parts of line on the load chart in the crane cabin.	API RP 2D	(✓) YES ( ) NO
	Determine if visible portion of wire rope adequately lubricated. If not lubricate wire rope	API RP 2D	(✓) YES ( ) NO
	For each layer of wire rope on drum, check that all rope is parallel and each crossover point at hoist flanges is correct	API RP 2D	(✓) YES ( ) NO
	The top layer of rope must not be lower to the flange tips 2.5 in for Smooth drum,2 in for groove drum or 2.5 times of wire rope diameter	API RP 2C	(✓) YES ( ) NO
	Inspect wire rope for, kinking, crushing, broken wires, necking down of rope diameter, worn outside wires, corroded or broken wires at end connection, cutting or unstringing.	API RP 2D	(✓) YES ( ) NO As found Good
	NoteRunning Ropes of rotation-resistant construction used in the main or auxiliary Hoist: - Four (4) Randomly distributed broken wires within 30 rope diameter - Two (2) broken wires in one stand within 6 rope diameter	API RP2D Edition 7	(✓) YES ( ) NO As found Good
	One valley break can indicate internal rope damage requiring close inspection of this section of the rope. When one or more valley breaks are found in one lay length the rope should be retired.	API RP2D Edition 7	(✓) YES ( ) NO As found Good
	Reductions for the rope diameter, from initial wire rope dimensional measurements, in a nonworking area (an area away from the sheaves) compared to the lowest diameter of rope measured in three working areas (areas where the rope regularly goes over a sheave) of more than the following is observed: — 3/64 in. (0.047 in.) (1.2 mm) for diameters up to and including 3/4 in. (19.1 mm); — 1/16 in. (0.062 in.) (1.6 mm) for diameters of 7/8 in. to 1-1/8 in. (22.2 mm to 28.6 mm); — 3/32 in. (0.093 in.) (0.8 mm) for diameter of 1-1/4 in. to 1-1/2 in. (31.8 mm to 38.1 mm); — For rope diameters greater than 1-1/2 in., a 5 % diameter loss from baseline measurement. — Wear of one-third the original diameter of the outside individual wires.	API RP2D Edition 7	(✓) YES ( ) NO As found dimension Good
	Increase in the length of an individual rope lay is observed. This increase in lay length and accompanying reduction in diameter can be caused by failure of the core. This can occur more readily in ropes or rotation-resistant construction.	API RP2D Edition 7	(✓) YES ( ) NO As found Good
	-Inspection and Verify running and standing rope from heat effect **Note; Not more than 250°C -There is evidence of heat damage from any source (i.e. engine exhaust, flare towers, stress corrosion cracking, etc.). Heat can be generated by passing a rope over a frozen or non-turning sheave, contact with structural members of the crane, improperly grounded welding leads or lightning strikes	Industry Standard	(✓) YES ( ) NO As found Good
	With the boom at the highest possible angle and the main load block or overhaul ball at the water level, ensure there is a minimum of 5 wraps of wire-rope remaining on the drums. Note: (Thai law, requires minimum of 2 wraps)	API SPEC 2C / Thai Law	(✓) YES ( ) NO
	Reference: - Running rope safety factor not less than 6 for wire rope that are running wire, (Thai law; Wire rope nominal breaking strength x number parts of line / Design factor 6) - Standing rope safety factor not less than 3.5 for wire rope that are stay cables, (Thai law)	Thai Law	(✓) YES ( ) NO ( ) N/A
	Measure and record nominal diameter of "running ropes"main and auxiliary (particularly on drum, equalizer sheave and at sockets, clips and dead end points) *****Nominal = several measurements added together divided by Number of measurements*****	API RP 2D	(✓) YES ( ) NO
	Inspect wire rope and record dimension.	API RP 2D	
	MAIN WIRE ROPE OD: — FULL DRUM	OEM Manual	0.771 inch
	MAIN WIRE ROPE OD: — HALF DRUM	OEM Manual	0.775 inch
	MAIN WIRE ROPE OD: — WATER LEVEL	OEM Manual	0.766 inch
	AUX WIRE ROPE OD: — FULL DRUM	OEM Manual	0.767 inch
	AUX WIRE ROPE OD: — HALF DRUM	OEM Manual	0.776 inch
	AUX WIRE ROPE OD: — WATER LEVEL	OEM Manual	0.759 inch
	Slip-Cut 1 meter of all ropes at the wedge socket and re-wedge to prevent rust inside of wedge socket (at outward end of rope, not on hoist drum) Dead end tail length is never less than 6 inches, or: - Standard 6 to 8 Strand wire rope is not less than 7 times the rope diameter - Rotation Resistant Wire Rope is not less than 20 times the rope diameter	Company Spec/Standard	(✓) YES ( ) NO
	U-bolt and Fist Grip Clips: Extreme care should be exercised to assure proper orientation of U-bolt clips. The U-bolt segment shall be in contact with the wire rope dead-end. The orientation, spacing, torquing, and number of all clips shall be in accordance with the crane manufacture's specifications.	API SPEC 2C	(✓) YES ( ) NO
	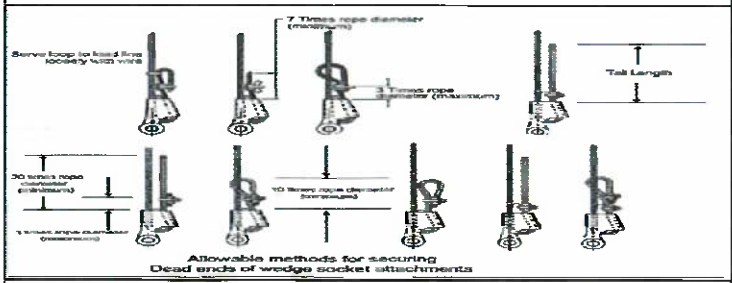	API SPEC 2C	Model ans Size wedge socket. Main hoist Model WS 1/8 Size 3/4 Aux Hoist Model WS 1/8 Size 3/4
	Verify that the wedge socket and wedge are the correct size for the rope in use and record the size	API SPEC 2C	(✓) YES ( ) NO
Sheaves & Bearings	Lubricate all sheave bearings.	API RP 2D	(✓) YES ( ) NO
	Visually inspect all sheaves and bushings for cracks, wear and deterioration	API RP 2D	(✓) YES ( ) NO As found Good

[redacted] / 31/05/25.

SYSTEM	TASK	Specification	Record/Reading
	Visually inspect wire rope track of sheave for rope imprints, wear and deterioration. If damage exist sheave should be resurfaced or replaced.	API RP 2D	(✓) YES ( ) NO As found: Good
	Pins retained by snap rings, bolt lock shafts, plates lock should be checked for missing or loose for all	API RP 2D	(✓) YES ( ) NO
	Check wirerope guards and keepers for proper location and condition.	API RP 2D	(✓) YES ( ) NO
	Determine if wire rope is jumping the sheaves, by looking for signs of damage on the sheave brim	Industry Standard	(✓) YES ( ) NO
	Sheave Rope Profile for optimum Rope life the sheave groove profile should be correctly matched to the rope diameter	Industry Standard	(✓) YES ( ) NO
	Check rope sheave should be machine grooved to adepth of not less than 1.5 times the norminal diameter of the rope	Industry Standard	( ) YES ( ) NO
	MAIN POINT SHEAVES: Note;	Industry Standard	No.1 (✓) YES ( ) NO No.2 (✓) YES ( ) NO
	AUX SHEAVES: Note;	Industry Standard	No.1 (✓) YES ( ) NO
	IDLER SHEAVES: Note;	Industry Standard	AUX. (✓) YES ( ) NO Main (✓) YES ( ) NO
	Pins for bronze bushing and straight roller bearing should have a running clearnace of .031 inch/ sheave of end play and should be adjusted accordingly.(count from left)	Industry Standard	(✓) YES ( ) NO
	MAIN POINT SHEAVES:	Industry Standard	Sheave No.1 18 .... inch Sheave No.2 18 .... inch
	AUX SHEAVES:	Industry Standard	Sheave No.1 16 .... inch
	IDLER SHEAVES:	Industry Standard	Sheave AUX. 18 .... inch. Sheave Main 18 .... inch.
	Ensure the sheaves are aligned and the fleet angle is correct **Remark ; Wire rope User's Manual allows 2 degree on grooved winch drum, Smooth Drum shuold be not more than 1-1/2 degree	API RP 2D	(✓) YES ( ) NO
	Determine if wire rope size and sheave sizes/grooves are compatible and record size. Sheave pitch diameter (D) to nominal wire rope diameter (d) ratio (D/d) shall not be less than 18:1	API SPEC 2C	(✓) YES ( ) NO
	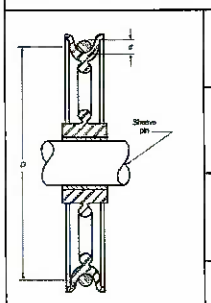 MAIN POINT SHEAVES: SHEAVE D / WIRE ROPE d = >18	API SPEC 2C	18 inch (D) 0.750 inch (d) 24 (Ratio D/d)
	AUX SHEAVES: SHEAVE D / WIRE ROPE d = >18	API SPEC 2C	16 inch (D) 0.750 inch (d) 21 (Ratio D/d)
	IDLER SHEAVES: SHEAVE D / WIRE ROPE d = > 18 (if applicable)	API SPEC 2C	18 inch (D) 0.750 inch (d) 24 (Ratio D/d)
	MAIN BLOCK SHEAVES: SHEAVE D / WIRE ROPE d = > 16	API SPEC 2C	16 inch (D) 0.750 inch (d) 21 (Ratio D/d)
Load Block	Load Block: Check the load block for cleanliness, binding sheaves, damaged or worn sheaves, worn or distorted sheave pins, broken bolts, and worn cheek weights. Note ;	Industry Standard	(✓) YES ( ) NO As found: Good
	Hook: Check the hook damage, excessive wear to the hook safety latch, hook swivel trunnions, thrust collar, securing, damage or missing lubrication fittings, proper lubrication, cracks and gouges, and if visibly bent or twisted or has been exposed to welding or arching. Note ;	Industry Standard	(✓) YES ( ) NO As found: Good
	Hook: Tip has been bent more than 10 degree out of plane from the hook body	Industry Standard/API RP2D7	(✓) YES ( ) NO As found: Good
	Inspect the Pins for bronze bushing and straight roller bearing should have a running clearnace of .031 inch/ sheave of end play and should be adjusted accordingly	Industry Standard	(✓) YES ( ) NO
	Inspect Hook or shackle to swivel case clearance is set at .031 to .062 inch, Clearance exceeding .12 to .18 (ONLY CROSBY BRAND)	OEM Crosby	(✓) YES ( ) NO
	OEM STANDARD RECOMMEND that Crane block removal from service untill replaced and repair following below	OEM STANDARD	
	- Elongated center pin and hook trunnion holes exceeding 5% of Original diameter	OEM STANDARD	(✓) YES ( ) NO As found: on standard
	-Material loss due to wear exceeding 10% of original section	OEM STANDARD	(✓) YES ( ) NO As found: on standard
	-Sheave wire rop groove diameter smaller than 2.5%	OEM STANDARD	(✓) YES ( ) NO As found: on standard
	Loosened tie bolts nuts, center pin round nuts, check weight cap screws and hook nut cap screws. Tie bolt nuts to be torqued to 35-40 ft.Lbs and restaked, all other fasteners wrench tight	OEM STANDARD	(✓) YES ( ) NO
	Throat opening - any distortion causeing an increase in throat opening of 5% not ot exceed 1/4 in. (6 mm.)(or as recommended by the manufacturer)	ASME B30.10	(✓) YES ( ) NO
	~~Inspect rope track worn in sheave groove, sheave must be resurface or replace~~	~~API RP 2D~~	~~(✓) YES ( ) NO~~
	Ensure the load block is not using "Cast Iron" cheek weights they can not be used as per API	API SPEC 2C	(✓) YES ( ) NO As found:
	Determine if all hooks are equipped with properly operating safety latches and check for proper functioning	API RP 2D	(✓) YES ( ) NO
	Lubricate sheave bearings and swivels	OEM Manual	(✓) YES ( ) NO
	Re-thighten nut firmly to point at which trunion will just rotate, the Re-tighten set-screw in nut and thread condition as in the picture below,	Industry Standard	(✓) YES ( ) NO
	Last NDE inspection record	Industry Standard	Last inspect date: —

[redacted] / 21/5/25.

SYSTEM	TASK		Specification	Record/Reading
	RECORD LOAD BLOCK INFORMATION :	Manufacturer:	OEM Manual	MCKISS
		Model:	OEM Manual	MB035D200B
		Serial Number:	OEM Manual	035454
	Record Load block measurements and details for future comparison with historical data		Industry Standard	(✓) YES ( ) NO
	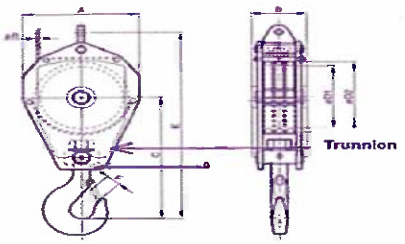	A - Block OD	Industry Standard	20 mm/ inch
		B - Block length	Industry Standard	17 mm/ inch
		C - Center of Pin to hook Saddle	Industry Standard	31 mm/ inch
		D1 - Sheave Diameter	Industry Standard	16 mm/ inch
		E - Block Width	Industry Standard	38 mm/ inch
		F - Throat Opening	Industry Standard	7.0 mm/ inch
		G - Trunnion	Industry Standard	0.074 mm/ inch
Auxiliary Ball	Inspect Auxiliary ball for cleanliness, binding swivel, work pad-eye hole. Inspect the hook damage, excessive wear to the hook safety latch, Bent connector plates,Severe corrosion pitting, hook swivel trunnions, thrust collar, securing, damage or missing lubrication fittings,Loose, missing or damaged retaining nuts, cotter pins or swivel set screws ,Missing or illegible rating and warning tags, proper lubrication, cracks and gouges, and if visibly bent or twisted or has been exposed to welding or arching.		Industry Standard	(✓) YES ( ) NO
	Hook: Tip has been bent more than 10 degree out of plane from the hook body		Industry Standard/API RP2D7	(✓) YES ( ) NO
	OEM STANDARD recommend that Crane overhaul ball removal from service untill replaced and repair following below		OEM STANDARD	
	- Elongated ball pin holes, hook latch pin holes and swivel eye exceeding 5% of original diameter,		OEM STANDARD	(✓) YES ( ) NO As found on standard
	-Swivel end play gap exceeding .08". Excessive end play indicates damaged internal set screw		OEM STANDARD	(✓) YES ( ) NO As found on standard
	-Material loss due to wear exceeding 10% of original section		OEM STANDARD	(✓) YES ( ) NO As found on standard
	Throat opening - any distortion causeing an increase in throat opening of 5% not ot exceed 1/4 in. (6 mm.)(or as recommended by the manufacturer)		ASME B30.10	(✓) YES ( ) NO
	All hooks that lift personnel are to have a positive locking safety latch **locking Pin to be used while lifting personnel**		API RP 2D	(✓) YES ( ) NO
	*** Temperature Effected : When hooks are to be used at temperature above 400° F. (204°C) or below -40°F (-40°C), the hook manufacturer or a qualified person should be consulted *** Chemically Active Environment : The strength of hooks can be affected by chemically active environments, such as caustic or acid substances or fumes. The hook manufacturer or qualified person should be consulted before hooks are used in chemically active environment		ASME B30.10	
	Verify to ensure nut firmly at which trunion rotate. Identify to set-screw in nut/ swivel/ counter pin and thread condition.		Industry Standard	(✓) YES ( ) NO
	Last NDE inspection record		Industry Standard	Last inspect date —
	RECORD AUX BALL INFORMATION :	Manufacturer:	OEM Manual	MCKISSICK
		Model:	OEM Manual	MB079
		Serial Number:	OEM Manual	96234
	Record Auxiliary Ball measurements and details for future comparison with historical data: For Model MB07T200E ONLY		Industry Standard	
	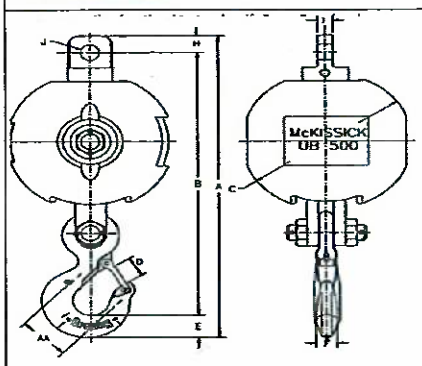	AA Dimensions 3.0 Inch	Industry Standard	3.0 mm/ inch
		A Dimensions 24.89 Inch	Industry Standard	24. mm/ inch
		B Dimensions 21.71 Inch	Industry Standard	21.5 mm/ inch
		C Dimensions 12.50 Inch	Industry Standard	12.5 mm/ inch
		D Dimensions 1.61 Inch	Industry Standard	1.6 mm/ inch
		E Dimensions 1.81 Inch	Industry Standard	1.8 mm/ inch
		F Dimensions 1.38 Inch	Industry Standard	1.38 mm/ inch
		H Dimensions 1.38 Inch	Industry Standard	1.38 mm/ inch
		I Dimensions 0.88 Inch	Industry Standard	0.88 mm/ inch
		J Dimensions 1.31 Inch	Industry Standard	1.31 mm/ inch
Safety system	Check Condition anti - two block , hanging chain ,eye bolts , fix bolts , shackle for missing , corrosion , erosion , deformation		API RP 2D	(✓) YES ( ) NO
	Check anti - two block kick out plate for freely movement		Company Spec/Standard	(✓) YES ( ) NO
	Check anti-2-block device proper function of Main winch		Company Spec/Standard	(✓) Function ( ) False
	Check anti-2-block device proper function of Aux. winch		Company Spec/Standard	(✓) Function ( ) False
	Check relation of boom radius and boom angle (lowest, middle, highest) with refrence to load chart. Recharge fluid W-15 to load indicator, if required.		API RP 2D	(✓) YES ( ) NO
	Functional test of emergency lowering system (See procedure in Emergency Load Lowering Box). Note: Keep for 1 Yr PM to sustain crane mechanic competency. Caution: Function test must be performed on top deck with max 2-foot height.		Company Spec/Standard	(✓) YES ( ) NO ( ) N/A
	Visually check emergency load lowering kit. Ensure EMERGENCY LOWERING PROCEDURE and MATERIAL LIST are in the box. - Ensure ALL items shown on the list are in the box and in good condition - SECURE THE BOX WITH A TIE WRAP.		Company Spec/Standard	(✓) YES ( ) NO ( ) N/A
Slew Mechanism	Visually check for damage and excessive wear on gear teeth		OEM Manual	(✓) YES ( ) NO
	Visually check slew gear box in the area of oil seal for any leaks		API RP 2D	(✓) YES ( ) NO
	RECORD SLEW GEAR BOX INFORMATION :	Manufacturer:	OEM Manual	ESKRIDGE
		Model:	OEM Manual	250A DIC4-51
		Serial Number:	OEM Manual	
	CHECK and RE-TORQUE swing drive gearbox mounting bolts at following brands: - ESKRIDGE, Model: 250 = 150 FT-LBS		API RP 2D	(✓) Yes ( ) No
	Check swing gearbox oil level/condition, top up if required		OEM Manual	(✓) YES ( ) NO

[redacted] / 31/5/25.

SYSTEM	TASK		Specification	Record/Reading
	Monitor slew gearbox oil condition by visually examine for burnt smell, metal particles, and/or other contaminants, record and change if found.	Meropa 220	OEM Manual	(✓) CHANGE OIL ( ) NOT CHANGE OIL
	Change slew gear box oil		OEM Manual	(✓) CHANGE OIL ( ) NOT CHANGE OIL
	Grease all pivot points of slew ring (bearing)		OEM Manual	(✓) YES ( ) NO
	Grease open gears (pinion)		OEM Manual	(✓) YES ( ) NO
	Rotate crane 360 degree and check smoothness of operation		OEM Manual	(✓) YES ( ) NO
	Check swing drive static parking brake for proper operation Caution: DO NOT stop the swing of the crane with this static brake (parking brake)		OEM Manual	(✓) YES ( ) NO
	Check swing drive dynamic parking brake for proper operation		OEM Manual	(✓) YES ( ) NO
	Check swing lock mechanism condition; corrosion ,dent , loos all part,worn and wear		OEM Manual	(✓) YES ( ) NO As found condition.....
	Check swing lock mechanism freely lock and unlock for function. **Check and inspect for hydraulic for leaks on actuator model.**		OEM Manual	(✓) YES ( ) NO As found condition.....
	Check condition of slew ring bolts e.g. Bolt grade and washers. Caution: Use only hardened flat washers under head of bolt. Do not use lock washers, or regular flat washers.		Industry Standard	(✓) YES ( ) NO As found condition.....
	Monitor ball-ring grease sample. If found wear and tear particles, take sample and send to lab. **Wear assessment by grease sample analysis—wear may be monitored by periodic grease sample analysis as describe in this section. Grease samples should be collected every twelve months as a minimum and the results of the analysis recorded; this period should be shortened if obvious metal or contaminants are present.		API PR 2D	( ) SEND TO LAB (✓) NOT SEND TO LAB As found.....
	Verify crane condition and load test as separate procedure. **Table 1—Static/Onboard Test Load and Radius** Static/Onboard Rated Load at a Specific Radius lb (kg) / Test Loads In Excess of Static/Onboard Rated Load at a Specific Radius ≤ 40,000 (18,144) / 25 % > 40,000 ≤ 100,000 (>18,144 ≤ 45,356) / 10,000 lb (4536 kg) > 100,000 (45,356) / 10 %		API 2C	(✓) YES ( ) NO Specific test load 4500 lbs.
	Verify crane condition and load test as separate procedure. " Record crane load test in load test form."		Company Standard	(✓) YES ( ) NO

Risk Level Definitions: The following 3 levels indicate the impact the noted deficiency poses to the operation or structural integrity of the equipment:

Level 1 = Incidental	Level #2 = Restricted Operation	Level #3 =Out of Service
Minor deficiency that is recommended to be promptly addressed, but poses no safety and/or environmental risk. The crane can still be operated at full duty.	Deficiency identified that has the potential to limit, de-rate or damage the crane, its surroundings and/or the environment. The duty and locked/ tagged out until the crane's duty and operation should be de-rated or service restricted.	The crane should be removed from duty and locked/ tagged out until the deficiency is rectified.

System:	Risk Level:	Component: / Location:	HYD. OIL / HYD. TANK.	In Accordance with: / Date Originated:
Description:	HYD. OIL CONTAIN WATER CONTAMINATION. น้ำมันไฮโดรลิคมีน้ำปนเปื้อน			
Recommended Action:				
Recommended urgency timeframe for corrective action:		Completed Date:		Completed By:

System:	Risk Level:	Component: / Location:	HYD. HOSE	In Accordance with: / Date Originated:
Description:	HYD. HOSE-12X150" DCV BOOM TO LINE BOOM UP (L) Q'TY 1 SET			
Recommended Action:	NEED TO REPLACE			
Recommended urgency timeframe for corrective action:		Completed Date:		Completed By:

System:	Risk Level:	Component: / Location:	HYD. HOSE	In Accordance with: / Date Originated:
Description:	HYD HOSE-4X 30' pilot COUNTERBALANCE VALVE Q'TY 2 SETS.			
Recommended Action:	NEED TO REPLACE			
Recommended urgency timeframe for corrective action:		Completed Date:		Completed By:

System:	Risk Level:	Component: / Location:	A-MOT	In Accordance with: / Date Originated:
Description:	A-MOT FAIL			
Recommended Action:				
Recommended urgency timeframe for corrective action:		Completed Date:		Completed By:

System:	Risk Level:	Component: / Location:	Winch Main Winch Drum seal leak.	In Accordance with: / Date Originated:
Description:	Seal of Drum Check leak			
Recommended Action:	NEED TO REPAIR.			

[redacted] / 29/8/25.

SYSTEM	TASK			Specification		Record/Reading
Recommended urgency timeframe for corrective action:			Completed Date:		Completed By:	

System:	Risk Level:	Component:		In Accordance with:	
		Location:		Date Originated:	
Description:					
Recommended Action:					
Recommended urgency timeframe for corrective action:			Completed Date:		Completed By:

Done by.

[redacted]

29 May 2025.

THE PEDESTAL CRANE CONDITION VERIFICATION

Date : 29 MAY 2025			
Crane Owner : CTEP/ COTL Field: BENCHAMAS Platform/ Vessel: BEWK			
Crane Owner 's representative : (Mech Supv./ M'Dent) [redacted]			
Qualified inspector : (Qualified Crane Mechanic)			
Inspector 's company / agency : (Third Party or Outsource to witness if applicable)			
Manufacture NAUTILUS Fabrication by Oil States Year of Fabrication 2003 Country USA Model / Serial 180B - 80 Standard API Edition Fifth Edition 1995			Remark
Safe Working Load (SWL) —> OEM	18.6 Metric Tonnes		
Safe Working Load (SWL) —> Existing via MOC, if applicable	– Metric Tonnes		
Boom length, Main	80 Ft		
Boom length, Auxiliary if applicable	– Ft		
Part of line main hoist	4 Part line		
Part of line auxiliary hoist	1 Part line		
Safe Working Load at longest boom radius	80 ft	5.14 Metric Tonnes/ Lbs	
Safe Working Load at shortest boom radius	13.5 ft	18 Metric Tonnes/ Lbs	
The document of crane specification for Testing , Maintenance and Inspection are provided by:	OEM	MOC / Crane Engineer	
Has the crane ever been modified by MOC ? (To verify if this crane is modified with MOC --> Allow to test the crane. If this crane is modifed without MOC --> Not allow to test the crane)	YES	NO	(Employers are not allowed to modify or adjust any part of cranes or dericks or consent to other persons to do these things, that might reduce the safety of the employees who work with the cranes or derricks).
Does the rotating part have proper guard in place?	YES	NO	(Need mitigation plan)
Is the ladder and hand rail in place?	YES	NO	(Need mitigation plan)
Is the maintenance platform in place?	YES	NO	(Need mitigation plan)
Is the SWL tag labelled on crane pedestal, main block or aux ball?	YES	NO	(Need mitigation plan)
Verify if the crane major component damaged or not	YES (Need to repair or mitigate unsafe condition with MOC before testing)	NO	(Employers shall not allow employees work with damaged/ unsafe cranes or derricks)
Inspect boom end connections, for bends, dents, corroded areas, cracked welds, and signs of mechanical damage, wear, etc. **any deviation should be reported** Level 1 = Incidental : Minor deficiency that is recommended to be promptly addressed, but poses no safety and/or environmental risk. The crane can still be operated at full duty. --> Allow to test Level #2 = Restricted Operation: Deficiency identified that has the potential to limit, de-rate or damage the crane, its surroundings and/or the environment. The duty and locked/ tagged out until the crane's duty and operation should be de-rated or service restricted. --> To be derated Level #3 = Out of Service;The crane should be removed from duty and locked/ tagged out until the deficiency is rectified. --> Not Use	YES (To be verified)	NO	
Function Load Testing			
1. Verify Crane SWL (Existing)	3.0 Metric Tonnes		
2. Verify routine maximum actual load.	2.4 Metric Tonnes		
3. Select the specimen load to be more than actual routine load 1.25 times but not more than SWL. Example # 1 : Crane 's SWL is 18 Metric Tonnes. The routine maximum actual load is 2.4 x 1.25 = 3 Metric Tonnes. Example # 2 : Crane 's SWL is 18 Metric Tonnes. The routine maximum actual load is 16 Metric Tonnes. By calculation, the load testing is 16 x 1.25 = 20 Metric Tonnes more than SWL (18 MTon). **Therefore, the load testing shall be 18 Metric Tonnes equal to SWL.**	3.0 Metric Tonnes		
4. Use Auxiliary Winch if specimen load less than or equal 3 Metric Tonne	YES	NO	
5.Use Main Winch if specimen load more than 3 Metric Tonne	YES	NO	
6. The record of load testing : Fill in "Function Test Record" sheet attached.			

RECORDED FUNCTION TEST PROCEDURE

1. CHECK AND RECORD READING RADIUS AND BOOM INDICATIOR AT FOUR (4) VALUES INCLUDING MAXIMUM AND MINIMUM.

(ALL REDIUS MEASUREMENT ARE TO BE TEKEN FROM THE CENTERLINE OF CRANE ROTATION)

ACTUAL	INDICATED RADIUS (FT)
A) 15' (MINIMUM)	15
B) 20'	20
C) 25'	25
D) 30' (INTERMIDIATE)	30
E) 40'	40
F) 50' (INTERMIDIATE)	50
G) 60'	60
H) 75' (MAXIMUM)	75

2. CHECK AND RECORD READING ON BOOM ANGLE / DEGREES.

SPECIFICATION	INDICATED BOOM ANGLE (DEGREES)
1). MAXIMUM. ....81..... DEGREES	81
2). INTERMEDIATE. ..... DEGREES	—
3). INTERMEDIATE. ..... DEGREES	—
4). MINIMUM. ....0..... DEGREES	0

3. READING ON LOAD INDICATOR WITHOUT SLINGS OR LOAD / LBS. (LOAD BLOCK + WIRE ROPE)

ACTUAL	INDICATOR READ FREE LOAD, (LBS)
1). MAXIMUM RADIUS 950 LBS.	950
2). MINIMUM RADIUS 1100 LBS,	1100

4. CHECK AND RECORD ENGINE HIGH IDLE SPEED / RPM.

SPECIFICATION	INDICATED OF FUNCTIONAL (RPM)
1). IDLE SPEED 850 RPM	850
2). LOW SPEED 850 RPM	850
3). HIGH SPEED 2200 RPM	2200

5. FUNTIONALLY TEST THE FOLLOWING.

ACTUAL	INDICATED OF FUNCTIONAL (TESTED)
A) MAIN HOIST ANTI -TWO BLOCK.	Function
B) AUXILIALY HOIST ANTI -TWO BLOCK.	Function
C) HIGH BOOM ANGLE KICK OUT.	Function
D) LOW BOOM ANGLE KICK OUT.	Function
E) PRIME MOVER SHUTDOWN.	OK
F) EMERGENCY SHUTDOWN.	OK
G) ROTATE CRANE 360 LEFT.	OK
H) ROTATE CRANE 360 RIGHT.	OK

6. RECORD HYDRAULIC RELIEF VALVE PRESSURE SETTING ON FOLLOWING HYDRAULIC FUNCTION:

SPECIFICATION	INDICATED PRESSURE (PSI)
A) MAIN HOIST ....2575.... PSI.	2575
B) AUXILIALY HOIST ....2800.... PSI.	2800
C) BOOM HOIST ....3000.... PSI.	3000

TEST CONDUCTED BY: [redacted] POSITION : CRANE MECH

CRANE OPERATOR : [redacted] POSITION : CRANE MECH

COMMENTS : Normal operation DATE : 29 MAY 2025

BENP

Sheet: 1808-80 Eng 3406_Rev.2024

3Y. 8M

W/O: 1244818

CRANE Mfg. : Nautilus
MODEL: 180B-80
SERIAL NUMBER : Crane Specific

LOCATION: CZ / BEWF ,J ,K ,N ,P ,BNWL ,NJWA

DATA BASE - PM JOB TASK CARD

Crew Size: 9
Estimated Hours:

SYSTEM	TASK		Specification	Record/Reading
Safety	Perform Job Safety Analysis (JSA)		Company Spec/Standard	(✓) YES ( ) NO
	Obtain "COMPANY" PERMIT TO WORK		Company Spec/Standard	(✓) YES ( ) NO
	Perform Tool Box Talk		Company Spec/Standard	(✓) YES ( ) NO
	BEFORE/AFTER JOB EXECUTION: Ensure to comply with isolation procedure (LOCK OUT/TAG OUT, WARNING SIGNS and BARRIERS).		Company Spec/Standard	(✓) YES ( ) NO
Required Tools	Insure proper tools are available at the job site		Company Spec/Standard	(✓) YES ( ) NO
	Tool bag		Company Spec/Standard	(✓) YES ( ) NO
	Tool box		Company Spec/Standard	(✓) YES ( ) NO
	Tool Container		Company Spec/Standard	(✓) YES ( ) NO
	MPI equipment and operator		Company Spec/Standard	(✓) YES ( ) NO
	Check safety harness Software and Hardware should be good condition before use		Company Spec/Standard	(✓) YES ( ) NO
	Check Rescue Equipment ready to use onsite		Company Spec/Standard	(✓) YES ( ) NO
	Portable Scaffolding and Crew if require		Company Spec/Standard	(✓) YES ( ) NO
Lubricants	Insure proper lubricants and consumables are available at the job site.		Company Spec/Standard	(✓) YES ( ) NO
	Hydraulic System - Hydraulic Oil	Rando HD-68	OEM Manual	(✓) YES ( ) NO
	Slew Gearbox - Gear Oil	Meropa 220	OEM Manual	(✓) YES ( ) NO
	Auxiliary Hoist - Gear Oil	Meropa 220	OEM Manual	(✓) YES ( ) NO
	Main Hoist - Gear Oil	Meropa 220	OEM Manual	(✓) YES ( ) NO
	Grease Points - Lithium Based **IT MUST NOT INCLUDE MOLYBDENUM DISULPHIDE**	MULTIFAK EP#2	OEM Manual	(✓) YES ( ) NO
	Open Gear Teeth - Open Gear Lube highly water resistant and of an adhesive nature.	OMEGA 73	OEM Manual	(✓) YES ( ) NO
	Pneumatic Lubricator	SAE Grade 10	OEM Manual	(✓) YES ( ) NO
	Wire rope Lubricant Company preferred grade	Birlube 70	OEM Manual	(✓) YES ( ) NO
	Engine Oil - SAE Grade 15W-40 (Delo Gold)	15W-40	OEM Manual	(✓) YES ( ) NO
	Safe Load Indicator fluid	W-15	OEM Manual	(✓) YES ( ) NO
	Engine Radiator - Should have radiator preservatives additives	Cat® SCA	OEM Manual	(✓) YES ( ) NO
Consumables	Spray Cold Galvanize		Company Spec/Standard	(✓) YES ( ) NO
	Denso Tape		Company Spec/Standard	(✓) YES ( ) NO
	WD-40		Company Spec/Standard	(✓) YES ( ) NO
History Review	Before starting work, tasks preparation at least 1 day prior to starting work: 1. Review history PM/ CM from Roving Team, 2. Review last PM/ CM/ PMI from Crane Mech, 3. List out all punch list and prepare parts. 4. Review last Certificate task performed		API RP 2D	(✓) YES ( ) NO
	Require to update part history from Crane Mech on following main compenents to ensure the right parts are prepared: - Aux/ Main/ Boom Cylinder, Engine, Swing Gearbox, etc. Reference: Crane OEM information of each part need to be recorded - Manufacturer & Contact Info - Model & serial number - Installation date		Company Spec/Standard	(✓) YES ( ) NO
	Review history data from Certificates and incorporate into current PM: - Pull Test Certificates (ongoing update, 4 yr. history). - Load Test Certificates (ongoing update, 4 yr. history). - Wire Rope Certifications (running rope and standing rope) (life of rope). - Hoist Certifications for hoist classified as "personnel handling" hoist.		API RP 2D	(✓) YES ( ) NO
	Review Last Preventative Maintenance Records (Inspection Reports) - Pre-use (Pre-Post Inspection) - 6 Monthly (API RP 2D Not Defined, Company Standard) - 1 Yearly (API RP 2D Defined Annual Inspection)		API RP 2D	(✓) YES ( ) NO
Lifting Gear Preparation	Visually inspect (Sling, sling hooks and shackles) include Webbing / Chain		Company Spec/Standard	(✓) YES ( ) NO
	Check color code / Tag & date inspection		Company Spec/Standard	(✓) YES ( ) NO
General	Determine if access route to-from crane is clean, safe, unobstructed and adequately protected against falls, tripping and slipping		Company Spec/Standard	(✓) YES ( ) NO
	Check drain lines and drip pans for deterioration		API RP 2D	(✓) YES ( ) NO
	Remove any sediment collected in the bottom of drip pans		Industry Standard	( ) YES ( ) NO
	Check for general crane and components for loss of protective coating and corrosion		Industry Standard	( ) YES ( ) NO
	Check for missing or loose ,corrosion, deformation pins, pin keepers, bolts, nuts, fasteners of all laders, cages and working platform		API RP 2D	( ) YES ( ) NO
	Apply grease to exposed grease parts (control valve spools, ball-ring gear, parking brake valve, etc.)		OEM Manual	( ) YES ( ) NO
Prime Mover	Engine Caterpillar		OEM Manual	( ) YES ( ) NO
	CATERPILLAR MODEL 3406	S/N.:	OEM Manual	6TB219790
		AR.No.:	OEM Manual	4N-8798
	Change engine lube oil & oil filter and check the condition of old oil. As found ;		OEM Manual	(✓) YES ( ) NO
	Check diesel tank level, top up if required.		OEM Manual	(✓) YES ( ) NO
	Check / Clean crankcase breather cap. Change if required		OEM Manual	(✓) YES ( ) NO
	Check / Clean air cleaner filter, Replace if require. (Note : Include inspect air cleaner housing)		OEM Manual	(✓) YES ( ) NO
	Check condition and inspect of the radiator and cap.		OEM Manual	(✓) YES ( ) NO
	Check for any signs of leaks on or around the engine ie; Crankshaft seal for front & rear seal , Engine oil cooler. As found;		OEM Manual	(✓) YES ( ) NO
	Check condition exhaust system for leaks, corrosion, insulation and general. As found ;		OEM Manual	(✓) YES ( ) NO
	Check condition of all engie hoses and tube. (Fuel supply,Cooling system and Lube oil system. As found;		OEM Manual	(✓) YES ( ) NO
	Drain water and sediment form diesel tank. As found ;		OEM Manual	(✓) YES ( ) NO
	Check / Clean Diesel tank level sightglass and diesel tag.		OEM Manual	(✓) YES ( ) NO
	Apply grease of fan bearing/shaft.		OEM Manual	(✓) YES ( ) NO
	Check and inspect the vibration damper and pulley. As found ;		OEM Manual	(✓) YES ( ) NO
	Change water coolant and check condition base of water coolant and record PH.		OEM Manual	(✓) YES ( ) NO
	COOLANT PARAMETERS (PH):	6 or higher	OEM Manual	PH = 7
	HOUR METER PARAMETERS:	LAST READING 3929 HRS	OEM Manual	3981 HRS

Fie

SYSTEM	TASK	Specification	Record/Reading
	Check and retigthen the bolts of all engine base. / Inspection mouting rubber. As found ;.....	OEM Manual	✓ YES ( ) NO
	Inspect the engine fan blades that there is a break is it severely distorted or rusted. As found ;.....	OEM Manual	✓ YES ( ) NO
	Change and adjust the tension engine belts. Remark; To check belt Tension, after has engine run more than 30 minutes apply 400 N (90 lbs) of force midway between the pulleys. Correctly adjusted belts with deflect 13 to 19 mm (1/2 to 3/4 inch).	OEM Manual	✓ YES ( ) NO
	Check engine HYD starter drive gear bendix and fly wheel gear teeth condition and record. **Replace if required"	OEM Manual	✓ YES ( ) NO Bendix Gear : 90 % Fly wheel Gear teeth : 90 %
	Check and inspect condition the Bendix of hydraulic Starter motor.	OEM Manual	✓ YES ( ) NO
	Lubricate and check engine throttle system.	OEM Manual	✓ YES ( ) NO
	Determine if the tachometer operates properly: Record Value of Idle & Max Speed (RPMs) Note: Too low Idle (RPMS) will cause excessive worn at winch brake	OEM Manual	
	ENGINE RPM SPECIFIC IDLE SPEED 850-950 RPM	OEM Manual	850 RPM
	ENGINE RPM SPECIFIC MAX SPEED 2200 RPM	OEM Manual	2200 RPM
	Confirm engine oil pressure as per Parameters below and Record Value:	OEM Manual	
	ENGINE OIL PRESSURE SPECIFIC Minimum Not lower then 30 PSI	OEM Manual	40 PSI
	ENGINE OIL PRESSURE SPECIFIC Maximum 70 PSI	OEM Manual	60 PSI
	Confirm engine fuel pressure Parameters are correct and Record Value:	OEM Manual	
	ENGINE FUEL PRESSURE SPECIFIC** Normal >35 PSI. **Note;Fuel pressure at high idle is lower than 105 kPa (15 psi)RAMETERS	OEM Manual	✓ YES ( ) NO
	Confirm engine temperature Parameters and Record Value:	OEM Manual	
	ENGINE WATER TEMP SPECIFIC NORMAL 120 - 180 degrees F	OEM Manual	180 F
	Test engine SAFETY DEVICE- ensure engine kill cable shuts off FUEL supply	API RP 2D	✓ Function ( ) False
	Test engine SAFETY DEVICE- ensure EMERGENCY KILL CABLE - shuts off AIR supply	API RP 2D	✓ Function ( ) False
	Test engine SAFETY DEVICE- ensure ENGINE low lube oil - releases OIL PRESSURE to ctivate Alarm Air System ***Note*** *Engine oil pressure low alarm at 20 PSI*	Company Spec/Standard	✓ Function ( ) False
	Test engine SAFETY DEVICE- ensure HIGH TEMP - releases OIL PRESSURE to **activate Alarm Air System**	Company Spec/Standard	✓ Function ( ) False
	Change water separator filter.	OEM Manual	✓ YES ( ) NO
	Check the general conditionand functioning of turbocharger. Note;	OEM Manual	( ) Leak ✓ Not Leak
	Change fuel filter and inspect the primary hand pump.	OEM Manual	✓ YES ( ) NO
	Check water temperator regulator.(Thermostat). Change if require refer from cooling temperature.	OEM Manual	✓ YES ( ) NO
	Check general condition the Governor and control linkage. (Inspect the throtle linkage)	OEM Manual	✓ YES ( ) NO
	Check or adjust the engine valve lash and bridge valve. (Intake vale = 0.015", Exhaust valve = 0.030")	OEM Manual	✓ YES ( ) NO
	Check condition wear of pump drive spline and record **Note; Remaining 70% of Original Spline Surface must be replace.*	Company Spec/Standard	90 % Remaining
	Check condition wear of adaptor Coulping spline shaft and record **Note; Remaining 70% of Original adaptor Coulping spline shaft Surface must be replace.*	Company Spec/Standard	90 % Remaining
	Check condition wear of Coulping spline and record. Re-tigthen of all lock bolts. **Note; Remaining 70% of Original adaptor Coulping spline shaft Surface must be replace.*	Company Spec/Standard	90 % Remaining
Hydraulic Start System (Apply for C2-Remote P/F Only)	**Check pressure system** at the pressure gauge which should reach 3,000 PSI as standard when the system is FULLY charged. Record Value. (As the system cools down, the pressure should drop slightly and finally stabilised.)	OEM Manual	✓ YES ( ) NO
	Visually inspect all hydraulic connections and hoses for leaks and retighten if necessary. (Caution: This should NOT be done if the system is under pressure.) 1. Slowly release system pressure by loosening the bleed screw on top of the hand pump. 2. Ensure no pressure remains, retighten the suspected leak fitting or replace the damaged hose or component. 3. Retighten the bleed screw on the hand pump. 4. Pump the system up to 2200 - 2600 PSI 5. Inspect that the leak was eliminated.	OEM Manual	✓ YES ( ) NO
	Function check Accumulator Pre-charge. (Caution: This should NOT be done if the system is under pressure.) 1. Shut the engine off, release system pressure via the bleed screw on top of the hand pump 2. Retighten bleed screw and actuate the hand pump. The pressure will rapidly increase and then stabilised. This pressure is related to accumulator gas pre-charge pressure. 4. If the pressure rapidly increase to 3000 PSI, it indicates that the accumulator has lost its gas charge. 5. Troubleshoot as necessary	OEM Manual	✓ YES ( ) NO
	Check function rechaging system by function boom down while the engine running. 1. The crane engine is running at 1,000-1500 RPM. 2. Slowly control lever boom function down for charging pressure to accumulator. 3. This pressure should read on prssure gauge between 2200 - 2600 PSI depending on the recharge ratio 80% std. (90% optional). Record Pressure Value.	OEM Manual	2600 PSI
	Check Nitrogen pressure in Accumulator ***Note**spec @ 1,500 psi as follow schematic and if found pressure loss below 1400 PSI then prepare recharge nitrogen in system	OEM Manual	1500 PSI
	Every 36 months or 2000 engine running hours (approximately 1500 starts) replace the high pressure filter.	OEM Manual	✓ YES ( ) NO
Pneumatic System	Check for noisy compressor operation, which could indicate a worn drive gear coupling, a loose pulley or excessive internal wear	OEM Manual	( ) YES ( ) NO
	Check Air Compressor external oil supply and return lines, if applicable, for kinks, bends, or restrictionsto flow	OEM Manual	( ) YES ( ) NO
	Inspect the Air compressor discharge port, inlet cavity and discharge line for evidence of restrictions and carboning. (if excessive buildup is noted)	OEM Manual	( ) YES ( ) NO
	Check all hose connections are sound and all mounting and pivoting connections are secure.	OEM Manual	( ) YES ( ) NO
	Check condition / Clean and lubricate unloading valve	OEM Manual	( ) YES ( ) NO
	Check proper air pressure is available for the system. Record Value.	OEM Manual	
	AIR SYSTEM PARAMETERS: MAX 60 PSI	OEM Manual	PSI
	Visually inspection condition of air receiver for signs of corrosion or loose of structural integrity.	Industry Standard	( ) YES ( ) NO
	Check the hose, piping and tubing for mechanical damage, corrosion, splits, blisters, cracking or excessive abrasion on the outer surface	Industry Standard	( ) YES ( ) NO
	Drain off air filter and reciever-to remove condensed water. If water is present, drain until water is removed.	Industry Standard	( ) YES ( ) NO
	Check proper operation of pop off valve, by manually functioning valve.	Industry Standard	( ) YES ( ) NO
	Check proper operation of manual latch valve, by manually functioning latch.	Industry Standard	( ) YES ( ) NO
	Check proper operation of small engine alarm horn.	Industry Standard	( ) YES ( ) NO

N/A

File

SYSTEM	TASK			Specification	Record/Reading
Hoist / Brakes	Visually check a hoist exhibits erratic operation and/or unusual noise, the hoist must be taken out of service until it is inspected and serviced by a qualified technician. Continued operation of a hoist with a defect in a critical component may lead to loss of load control, property damage, serious injury or death.			OEM Manual	(✓) YES ( ) NO
	Visual exteriors of hoist, frames, drums and flanges for damage, leaks, cracks and wear and repair/replace as required to maintain the structural integrity of the hoist.			OEM Manual	(✓) YES ( ) NO
	Check all hoist mounting pins, bolts or other fasteners and replace or tighten as necessary.			OEM Manual	(✓) YES ( ) NO
	Lubricant level must be maintained between the minimum and maximum levels; midway up sight glass or at bottom of level plug port as equipped and check/clean plug vent. Use only the recommended type of lubricant.			OEM Manual	(✓) YES ( ) NO
	Inspect Brake Valve Opening Pressure test V/V 1-1/4" PD Series : no lower than 550 PSI	Aux		Braden Bulletin 527-Dec,1996	600 PSI
	Inspect Brake cylinder opening pressure test.	Aux		Industry Standard	450 PSI
	Measure differancian of static and dynamic brake. CH/PD Series : 150-250 PSI.	Aux		Industry Standard	160 PSI
	Check for external oil leaks and repair as necessary. This is extremely important due to the accelerated wear that will result from insufficient lubricating oil in the hoist.			OEM Manual	(✓) YES ( ) NO
	RECORD BOOM CYLINDER INFORMATION :	Boom cylinder Diameter:		OEM Manual	DIA: 12 inch
		CY Number:		OEM Manual	L= 6167-M4 R= 4869-A3
		Serial Number:		OEM Manual	L= 5472 R= 5471
	RECORD MAIN HOIST INFORMATION :	Manufacturer:		OEM Manual	Braden
		Model:		OEM Manual	CH210A-36929-02-1
		Serial Number:		OEM Manual	03010080
	Check MAIN HOIST for proper operation and good condition			API RP 2D	(✓) YES ( ) NO
	Brake test & record pressure of MAIN HOIST.			OEM Manual	(✓) YES ( ) NO As found ok
	Change main hoist gear oil and inspect for small particles in the old oil. ** Refer to Onsite Gear Oil Sample Procedure ** ** Replace and send oil sample to SKL if abnormal ** ** Take photo of Oil Sampling for Reference**			OEM Manual	(✓) YES ( ) NO As found ok
	RECORD AUXILIARY HOIST INFORMATION :	Manufacturer:		OEM Manual	Braden
		Model:		OEM Manual	CH150A-23110-01-1
		Serial Number:		OEM Manual	03002256
	Check AUXILIARY HOIST for proper operation and good condition			API RP 2D	(✓) YES ( ) NO
	Brake test & record pressure of AUXILIARY HOIST			API RP 2D	(✓) YES ( ) NO
	Change Aux. hoist gear oil and inspect for small particles in the old oil. ** Refer to Onsite Gear Oil Sample Procedure ** ** Replace and send oil sample to SKL if abnormal ** ** Take photo of Oil Sampling for Reference** Please record if any abnormal condition. Note.....			OEM Manual	( ) SEND SKL LAB (✓) NOT SEND SKL LAB
	Check pressre relief Valve: Determine hoistes' relief valve pressure gauge is working and giving accurate measurement by notice whether pressure gauge is vibrating or not. If not, set relief valve pressure in accordance with the schematic and parameters below. Record all readings.			OEM Manual	(✓) YES ( ) NO
	BOOM RELIEF VALVE TEST	Relief Specific:	3,000 PSI	OEM Manual	3000 PSI
	MAIN HOIST RELIEF VALVE TEST	Relief Specific:	2,575 PSI	OEM Manual	2570 PSI
	AUX HOIST RELIEF VALVE TEST	Relief Specific:	2,800 PSI	OEM Manual	2800 PSI
	SWING RELIEF VALVE TEST	Relief Specific:	1,500 PSI	OEM Manual	1000 PSI
	Measure Pressure of hoist motor case drains and Record Value Reference Bulletin: BRADEN Inspection, Testing, Preventive Maintenance and Special Operating Instructions For Planetary Hoists PB-308 latest edition for further details.			OEM Manual	
	MAIN HOIST CASE DRAIN for Gear Motor (Down Mode).	PRESSURE	< 100 psi	Company Spec/Standard	2 PSI
	AUX. HOIST CASE DRAIN for Gear Motor (Down Mode).	PRESSURE	< 100 psi	Company Spec/Standard	5 PSI
Hydraulic System	Check hydraulic tank oil level. Oil should be visible in the sight glass. Top up as required (3/4 Tank Minimum)			OEM Manual	(✓) YES ( ) NO
	Check hydraulic oil condition. (Check if running hours are more than 100 hours from last oil change or during Annual inspection) ** Refer to Onsite Hydraulic Oil Sample Procedure ** ** Replace and send oil sample to SKL if abnormal ** ** Take photo of Oil Sampling for Reference**		Rando HD-68	Company Spec/Standard	(✓) SEND SKL LAB ( ) NOT SEND SKL LAB
	Inspect hydraulic tank and strainer filter. Change hydraulic oil, if required with lab confirmation.			Company Spec/Standard	(✓) YES ( ) NO
	Drain off 1 liter of oil to remove condensed water. If water is present, drain until water is removed and top up with clean oil			Industry Standard	(✓) YES ( ) NO
	Check for any hydraulic leaks			Industry Standard	(✓) YES ( ) NO
	Check the hydraulic hose, piping and tubing for mechanical damage, corrosion, splits, blisters, cracking or excessive abrasion on the outer surface			API RP 2D	(✓) YES ( ) NO
	Check that all hydraulic hose connections are sound and that all mounting and pivoting connections are secure.			Industry Standard	(✓) YES ( ) NO
	Lubricate hydraulic swivel in pedestal and insure tie down restrains are in place and preventing the swivel from rotating with the crane structure.			OEM Manual	(✓) YES ( ) NO
	Ensure the filler breather on tank is not covered or clogged			Industry Standard	(✓) YES ( ) NO
	Visually inspect for missing or loose pins, pin keepers, bolts, nuts, fasteners on all pumps, motors and valves			API RP 2D	(✓) YES ( ) NO
	* Re-tighten the stud bolt of hydraulic main pump and marking the nut for checking to prevent loosening. Note : Torqe spec model P76, P75, PGP/PGM350 ,PGP/PGM330 = 260 ft-lbs. , for model PGP/PGM315 = 140 ft-lbs. and PGP/PGM365 = 450 ft-lbs.			The Commercial Intertech manual	(✓) YES ( ) NO
	Check the filter bypass indicator, while engine is running			OEM Manual	(✓) YES ( ) NO
	With engine running (after all other items pass inspection), check the system for leaks around fittings, hoses, valves and reservoirs			Industry Standard	(✓) YES ( ) NO
	With engine running, check the source of any unusual noise or vibration that may cause or indicate equipment damage or wear			Industry Standard	(✓) YES ( ) NO
	Ensure all hoses are properly rated for the system, see "Parameters" for each system for details.			Industry Standard	(✓) YES ( ) NO
	Record hydraulic oil operating temperture. Note: Hydraulic fluid overheating temperature is over 180 F degrees or 82 C, degrees (reservoir temperature)			Industry Standard	130 Degree F
	Determine if hydraulic return pressure gauge is working and giving accurate measurements. Record readings				
	RECORD HYDRAULIC RETURN PRESSURE PARAMETERS:		60 PSI "maximum"	OEM Manual	12 PSI
	Check and inspect the hydraulic return filters and seals.			OEM Manual	(✓) YES ( ) NO
	Function Testing and record pressures with engine at :		2,200 RPM	API RP 2D	

SYSTEM	TASK				Specification	Record/Reading
	BOOM FUNCTION TEST (Need Crane Mech to verify each platform)				OEM Manual	
	Boom Angle : 60 Degree (Recommend or as applicable)	UP	Cracking pressure	RECORD	OEM Manual	600 PSI
			Full Speed Pressure	RECORD	OEM Manual	900 PSI
		DOWN	Cracking pressure	RECORD	OEM Manual	800 PSI
			Full Speed Pressure	RECORD	OEM Manual	1600 PSI
	MAIN HOIST FUNCTION TEST (Need Crane Mech to verify each platform)				OEM Manual	
	Boom Angle : 60 Degree (Recommend or as applicable)	UP	Cracking pressure	RECORD	OEM Manual	700 PSI
			Full Speed Pressure	RECORD	OEM Manual	400 PSI
		DOWN	Cracking pressure	RECORD	OEM Manual	800 PSI
			Full Speed Pressure	RECORD	OEM Manual	1600 PSI
	AUX HOIST FUNCTION TEST (Need Crane Mech to verify each platform)				OEM Manual	
	Boom Angle : 60 Degree (Recommend or as applicable)	UP	Cracking pressure	RECORD	OEM Manual	700 PSI
			Full Speed Pressure	RECORD	OEM Manual	1000 PSI
		DOWN	Cracking pressure	RECORD	OEM Manual	600 PSI
			Full Speed Pressure	RECORD	OEM Manual	1000 PSI
	SWING FUNCTION TEST (Need Crane Mech to verify each platform)				OEM Manual	
	Boom Angle : 60 Degree (Recommend or as applicable)	LEFT	Cracking pressure	RECORD	OEM Manual	200 PSI
			Full Speed Pressure	RECORD	OEM Manual	800 PSI
		RIGHT	Cracking pressure	RECORD	OEM Manual	200 PSI
			Full Speed Pressure	RECORD	OEM Manual	800 PSI
Electrical system, Crane Boom Lighting and red obstruction light	Check the electrical junction boxes, wires and connections for deterioration, desiccant bags, (replace as required)				Industry Standard	✓ YES ( ) NO
	Check the condition of the grounding and lighting protection system.				Company Spec/Standard	✓ YES ( ) NO
	Visually inspect boom floodlight and light guards for loose, missing, corroded				Company Spec/Standard	✓ YES ( ) NO
	Check condition pipe support , U-bolt ,nuts of boom floodlight and Electric slipring for loose , missing , corroded				Company Spec/Standard	✓ YES ( ) NO
	Check Electric slipring/swivel for 360° continuous rotation				OEM Munnal	✓ YES ( ) NO
	Check Water Ingress, condensation in electric slipring, red obstruction light and boom floodlight				OEM Munnal	✓ YES ( ) NO
	Check feely movement and lubricate of boom floodlight				OEM Munnal	✓ YES ( ) NO
	With generator in operation, intergize all lights to unsure proper function.				API RP 2D	✓ YES ( ) NO
	Check condition of crane boom lighting and safety net is secured with strong point. * **Safety net should be replace 24 months after installation (2 year)***			Last installation date _____	Company Spec/Standard	✓ YES ( ) NO
	Check function of crane sound signal				Company Spec/Standard	✓ YES ( ) NO ( ) N/A
	Check function of crane boom lighting at boom upper section				Company Spec/Standard	✓ YES ( ) NO ( ) N/A
	Check function of crane boom lighting at boom lower section				Company Spec/Standard	✓ YES ( ) NO ( ) N/A
	Check function of crane boom lighting at winch skid				Company Spec/Standard	✓ YES ✓ NO ( ) N/A
	Check function of crane boom lighting at crane cabin				Company Spec/Standard	✓ YES ( ) NO ( ) N/A
	Check function becon light at boom tip				Company Spec/Standard	✓ YES ( ) NO ( ) N/A
	Inspection wire rope guide & Roller assembly				Company Spec/Standard	✓ YES ( ) NO
	Visually inspect red obstruction light pipe support, u-bolts, nuts connection to hand rail for loose, missing, corroded				Company Spec/Standard	✓ YES ( ) NO
	Visually inspect safety sling attached to the red obsruction light and its base for loose, missing, corroded				Company Spec/Standard	✓ YES ( ) NO
	Visually inspect red obstruction light function. The light is designed to turn on all the time.				Company Spec/Standard	✓ YES ( ) NO
Operator Control Station	Check general condition of control panel, bolts, paint security, etc.				API RP 2D	✓ YES ( ) NO
	Determine if there is a serviceable fire extinguisher in the vicinity of the crane				Company Spec/Standard	✓ YES ( ) NO
	Determine if correct load chart is in use and easily visible for operator				API RP 2D	✓ YES ( ) NO
	Determine if charts, indicators and hand signal chart are in the cabling and firmly attached				API RP 2D	✓ YES ( ) NO
	Determine if angle/radius indicator plate is easily visible to operator and is moving freely.				API RP 2D	✓ YES ( ) NO
	Check condition of control levers and determine if they "dead-man" back to the neutral position.				API RP 2D	✓ YES ( ) NO
	Check condition of pressure gauges.				API RP 2D	✓ YES ( ) NO
	Check proper control labels are firmly installed, completely legible and properly labeled				API RP 2D	✓ YES ( ) NO
	Check controls for freedom-of-movement				API RP 2D	✓ YES ( ) NO
	Check condition , Leak, freely moement of Dynamic swing break system *** Note; If HYD Oil loose in CYD reservoir must be refill*				OEM Manual	✓ YES ( ) NO
	Check condition , Leak, freely moement of Accelerate System *** Note; If HYD Oil loose in CYD reservoir must be refill*				OEM Manual	✓ YES ( ) NO
	Check all safety glass and rubber seal for proper condition				API RP 2D	✓ YES ( ) NO ( ) N/A
	Function Test Horn. Note;.....				Industry Standard	✓ YES ( ) NO ( ) N/A
	Ensure PRE/POST Check List and Pocket Manual in the cabin. Note;.....				Company Standard	✓ YES ( ) NO ( ) N/A
Load Indicator System	Visual check on fittings and connections for leaks. Fix leak if any. Note:.....				OEM Manual	✓ YES ( ) NO
	Should any leaks exist, stop leak and recharge system, refer to maintenance manual				OEM Manual	✓ YES ( ) NO
	Change and flushing Load cell fluid.				OEM Manual	✓ YES ( ) NO
	Check general condition of tubbing, hoses, pins bolts, paint, etc.				Industry Standard	✓ YES ( ) NO
	Insure load cell is free of obstructions				OEM Manual	✓ YES ( ) NO
	Check condition of gauge(s) face and clean glass as required.				OEM Manual	✓ YES ( ) NO
	Check the scale's operation and weighing accuracy. (Main Hoist) Remark : Maximum variance +/- 2% Note;.....				Company Spec/Standard	✓ YES ( ) NO ( ) N/A
	Check the scale's operation and weighing accuracy. (Aux. Hoist) Remark : Maximum variance +/- 2% Note;.....				Company Spec/Standard	✓ YES ( ) NO ( ) N/A
	Check the internal casting fluid of weight indicator. top up if required				Industry Standard	✓ YES ( ) NO ( ) N/A

Flix

SYSTEM	TASK	Specification	Record/Reading
	Insure SWL tag matches ratings on the Crane Load Chart.	OEM Manual	(✓) YES ( ) NO ( ) N/A
	Insure Boom Length, matches the Crane Load Chart	OEM Manual	(✓) YES ( ) NO ( ) N/A
	Insure Boom Angle measurements and readings match the boom angle indicator.	OEM Manual	(✓) YES ( ) NO ( ) N/A
	Insure Boom Radius measurements indicate the distance from center line of the crane to the hook	OEM Manual	(✓) YES ( ) NO ( ) N/A
	Check Main load cell gap 1/4 (0.250) inch	OEM Manual	(✓) YES ( ) NO ( ) N/A
	Check Aux load cell gap 3/8(0.380) inch (Compression Load Cell Type)	OEM Manual	(✓) YES ( ) NO ( ) N/A
Pedestal & Structure	Visually check Pedestal for chipped/cracked paint, deformation, worn parts, dents, corroded areas, cracks weld, etc.	API RP 2D	(✓) YES ( ) NO
	Check water rain drain at pedestal must be not obstuct	Industry Standard	(✓) YES ( ) NO
	Check pin and cotter pin of pedestal missing , corrosion, wear, damage and exercise pin.	Industry Standard	(✓) YES ( ) NO
	Visually check Base - Plate connection and Base hoist Structure for chipped/cracked paint, deformation, worn parts, dents, corroded areas, cracks weld, etc.	API RP 2D	(✓) YES ( ) NO
	Check A fixed such as Handrial, Walkway, Grating, stationary structure without significant movement in response to waves and currents in normal operating conditions.	API RP 2C	(✓) YES ( ) NO
	Visually check and lubricate maintenance Jib. ***Note*** If on pedestal crane	OEM Manual	(✓) YES ( ) NO ( ) N/A
	Check maintenance jib is secure firmly. ***Note*** If on pedestal crane	OEM Manual	(✓) YES ( ) NO ( ) N/A
Box Boom & Luffing CYD	Check and Verify entire box boom and Boom CYD for loss of protective coating and corrosion. Note;.....	API RP 2D	(✓) YES ( ) NO
	Check and Verify entire box boom and Boom CYD for chipped/cracked paint, deformation, worn parts, dents, corroded areas, cracks, etc. Note;.....	API RP 2D	(✓) YES ( ) NO
	Check and Verify boom end connections, for bends, dents, corroded areas, cracked welds, and signs of mechanical damage, wear, etc. **any deviation should be reported**	API RP 2D	(✓) YES ( ) NO
	Check and Verify boom rest and wooden support to ensure it's in good condition	API RP 2D	(✓) YES ( ) NO
	Inspect pin and pin holes of Upper tank and Lower tank for excessive clearance	OEM Manual	(✓) YES ( ) NO
	BOOM CYLINDER PIN MAXIMUM TOLERANCE — 0.125 Inch (3mm)	Industry Standard	As found OK
	Check BOOM CYLINDERS for proper operation and good condition	API RP 2D	(✓) YES ( ) NO
	Check Boom cylinder barrels and rods for leaks, mechanical damage and corrosion	Industry Standard	(✓) YES ( ) NO
	Check and measurement boom foot pin and connection pins for clearance	Industry Standard	
	BOOM FOOT PINS & BOOM BOX CONNECTER PIN TOLERANCE — 0.125 Inch (3mm)	Industry Standard	
	Boom Foot Pin Tolerance	Industry Standard	0.032 inch
	Boom Box Connecter Pin Tolerance	Industry Standard	0.028 inch
	Check connecting bolts of box boom loose, corrosion, wear, damage	OEM Manual	(✓) YES ( ) NO
	Lubricate boom foot pins and bushings	OEM Manual	(✓) YES ( ) NO
	Lubricate boom cylinder pins, bearings and bushings	OEM Manual	(✓) YES ( ) NO
	Boom function test angle/radius to correction **Note; The cylinder(s) mechanism shall be capable of elevating the boom from a minimum of zero degrees to the maximum recommended boom angle.	API RP 2C	(✓) YES ( ) NO
	Operation functional test and verify Boom Creeping down **Note ; Test at angle 60 °	Industry Standard	(✓) YES ( ) NO As found OK
Wire Rope	Determine if parts-of-line match parts of line on the load chart in the crane cabin.	API RP 2D	(✓) YES ( ) NO
	Determine if visible portion of wire rope adequately lubricated. If not lubricate wire rope	API RP 2D	(✓) YES ( ) NO
	For each layer of wire rope on drum, check that all rope is parallel and each crossover point at hoist flanges is correct	API RP 2D	(✓) YES ( ) NO
	The top layer of rope must not be lower to the flange tips 2.5 in for Smooth drum,2 in for groove drum or 2.5 times of wire rope diameter	API RP 2C	(✓) YES ( ) NO
	Inspect wire rope for, kinking, crushing, broken wires, necking down of rope diameter, worn outside wires, corroded or broken wires at end connection, cutting or unstringing.	API RP 2D	(✓) YES ( ) NO As found OK
	NoteRunning Ropes of rotation-resistant construction used in the main or auxiliary Hoist: - Four (4) Randomly distributed broken wires within 30 rope diameter - Two (2) broken wires in one stand within 6 rope diameter	API RP2D Edition 7	(✓) YES ( ) NO As found OK
	One valley break can indicate internal rope damage requiring close inspection of this section of the rope. When one or more valley breaks are found in one lay length the rope should be retired.	API RP2D Edition 7	(✓) YES ( ) NO As found OK
	Reductions for the rope diameter, from initial wire rope dimensional measurements, in a nonworking area (an area away from the sheaves) compared to the lowest diameter of rope measured in three working areas (areas where the rope regularly goes over a sheave) of more than the following is observed: — 3/64 in. (0.047 in.) (1.2 mm) for diameters up to and including 3/4 in. (19.1 mm); — 1/16 in. (0.062 in.) (1.6 mm) for diameters of 7/8 in. to 1-1/8 in. (22.2 mm to 28.6 mm); — 3/32 in. (0.093 in.) (0.8 mm) for diameter of 1-1/4 in. to 1-1/2 in. (31.8 mm to 38.1 mm); — For rope diameters greater than 1-1/2 in., a 5 % diameter loss from baseline measurement. —Wear of one-third the original diameter of the outside individual wires.	API RP2D Edition 7	(✓) YES ( ) NO As found dimension OK
	Increase in the length of an individual rope lay is observed. This increase in lay length and accompanying reduction in diameter can be caused by failure of the core. This can occur more readily in ropes or rotation-resistant construction.	API RP2D Edition 7	(✓) YES ( ) NO As found OK
	-Inspection and Verify running and standing rope from heat effect **Note; Not more than 250°C -There is evidence of heat damage from any source (i.e. engine exhaust, flare towers, stress corrosion cracking, etc.). Heat can be generated by passing a rope over a froten or non-turning sheave, contact with structural members of the crane, improperly grounded welding leads or lightning strikes	Industry Standard	(✓) YES ( ) NO As found OK
	With the boom at the highest possible angle and the main load block or overhaul ball at the water level, ensure there is a minimum of 5 wraps of wire-rope remaining on the drums. Note: (Thai law, requires minimum of 2 wraps)	API SPEC 2C / Thai Law	(✓) YES ( ) NO
	Reference: - Running rope safety factor not less than 6 for wire rope that are running wire, (Thai law; Wire rope nominal breaking strength x number parts of line / Design factor 6) - Standing rope safety factor not less than 3.5 for wire rope that are stay cables, (Thai law)	Thai Law	(✓) YES ( ) NO ( ) N/A
	Measure and record nominal diameter of "running ropes"main and auxiliary (particularly on drum, equalizer sheave and at sockets, clips and dead end points) *****Nominal = several measurements added together divided by Number of measurements*****	API RP 2D	(✓) YES ( ) NO
	Inspect wire rope and record dimension.	API RP 2D	
	MAIN WIRE ROPE OD: — FULL DRUM	OEM Manual	0.771 inch
	MAIN WIRE ROPE OD: — HALF DRUM	OEM Manual	0.774 inch
	MAIN WIRE ROPE OD: — WATER LEVEL	OEM Manual	0.769 inch
	AUX WIRE ROPE OD: — FULL DRUM	OEM Manual	0.793 inch
	AUX WIRE ROPE OD: — HALF DRUM	OEM Manual	0.797 inch
	AUX WIRE ROPE OD: — WATER LEVEL	OEM Manual	0.790 inch

SYSTEM	TASK	Specification	Record/Reading
	Slip-Cut 1 meter of all ropes at the wedge socket and re-wedge to prevent rust inside of wedge socket (at outward end of rope, not on hoist drum) Dead end tail length is never less than 6 inches, or: - Standard 6 to 8 Strand wire rope is not less than 7 times the rope diameter - Rotation Resistant Wire Rope is not less than 20 times the rope diameter	Company Spec/Standard	(✓) YES ( ) NO
	U-bolt and Fist Grip Clips: Extreme care should be exercised to assure proper orientation of U-bolt clips. The U-bolt segment shall be in contact with the wire rope dead-end. The orientation, spacing, torquing, and number of all clips shall be in accordance with the crane manufacture's specifications.	API SPEC 2C	(✓) YES ( ) NO
	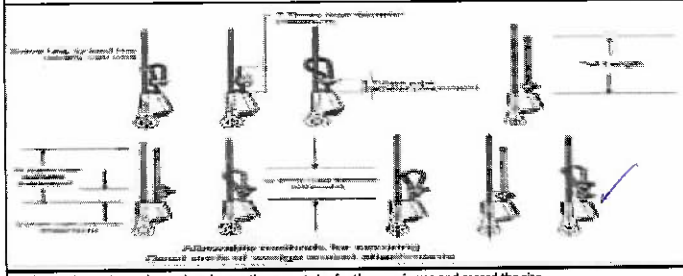	API SPEC 2C	Model ans Size wedge socket. Main hoist Model Mckisick Size 3/4 Aux.Hoist Model Mckisick Size 3/4
	Verify that the wedge socket and wedge are the correct size for the rope in use and record the size	API SPEC 2C	(✓) YES ( ) NO
Sheaves & Bearings	Lubricate all sheave bearings.	API RP 2D	(✓) YES ( ) NO
	Visually inspect all sheaves and bushings for cracks, wear and deterioration	API RP 2D	(✓) YES ( ) NO As found OK
	Visually inspect wire rope track of sheave for rope imprints, wear and deterioration. If damage exist sheave should be resurfaced or replaced.	API RP 2D	(✓) YES ( ) NO As found OK
	Pins retained by snap rings, bolt lock shafts, plates lock should be checked for missing or loose for all	API RP 2D	(✓) YES ( ) NO
	Check wirerope guards and keepers for proper location and condition.	API RP 2D	(✓) YES ( ) NO
	Determine if wire rope is jumping the sheaves, by looking for signs of damage on the sheave brim	Industry Standard	(✓) YES ( ) NO
	Sheave Rope Profile for optimum Rope life the sheave groove profile should be correctly matched to the rope diameter	Industry Standard	(✓) YES ( ) NO
	Check rope sheave should be machine grooved to adepth of not less than 1.5 times the norminal diameter of the rope	Industry Standard	(✓) YES ( ) NO
	MAIN POINT SHEAVES: Note;.....	Industry Standard	No.1 (✓) YES ( ) NO No.2 (✓) YES ( ) NO
	AUX SHEAVES: Note;.....	Industry Standard	No.1 (✓) YES ( ) NO
	IDLER SHEAVES: Note;.....	Industry Standard	AUX. (✓) YES ( ) NO Main (✓) YES ( ) NO
	Pins for bronze bushing and straight roller bearing should have a running clearnace of .031 inch/ sheave of end play and should be adjusted accordingly.(count from left)	Industry Standard	(✓) YES ( ) NO
	MAIN POINT SHEAVES:	Industry Standard	Sheave No.1 18 inch Sheave No.2 18 inch
	AUX SHEAVES:	Industry Standard	Sheave No.1 18 inch
	IDLER SHEAVES:	Industry Standard	Sheave AUX 14 inch. Sheave Main 18 inch.
	Ensure the sheaves are aligned and the fleet angle is correct **Remark ; Wire rope User's Manual allows 2 degree on grooved winch drum, Smooth Drum shuold be not more than 1-1/2 degree	API RP 2D	(✓) YES ( ) NO
	Determine if wire rope size and sheave sizes/grooves are compatible and record size. Sheave pitch diameter (D) to nominal wire rope diameter (d) ratio (D/d) shall not be less than 18:1	API SPEC 2C	(✓) YES ( ) NO
	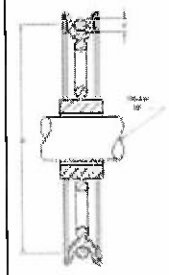 MAIN POINT SHEAVES: SHEAVE D / WIRE ROPE d = >18	API SPEC 2C	18 inch (D) 0.750 inch (d) 24 (Ratio D/d)
	AUX SHEAVES: SHEAVE D / WIRE ROPE d = >18	API SPEC 2C	18 inch (D) 0.750 inch (d) 24 (Ratio D/d)
	IDLER SHEAVES: SHEAVE D / WIRE ROPE d = > 18 (If applicable)	API SPEC 2C	14 inch (D) 0.750 inch (d) 18 (Ratio D/d)
	MAIN BLOCK SHEAVES: SHEAVE D / WIRE ROPE d = > 16	API SPEC 2C	16 inch (D) 0.750 inch (d) 21 (Ratio D/d)
Load Block	Load Block: Check the load block for cleanliness, binding sheaves, damaged or worn sheaves, worn or distorted sheave pins, broken bolts, and worn cheek weights. Note ;.....	Industry Standard	(✓) YES ( ) NO As found KO
	Hook: Check the hook damage, excessive wear to the hook safety latch, hook swivel trunnions, thrust collar, securing, damage or missing lubrication fittings, proper lubrication, cracks and gouges, and if visibly bent or twisted or has been exposed to welding or arching. Note ;.....	Industry Standard	(✓) YES ( ) NO As found OK
	Hook: Tip has been bent more than 10 degree out of plane from the hook body	Industry Standard/API RP2D7	(✓) YES ( ) NO As found OK

SYSTEM	TASK	Specification	Record/Reading
	Inspect the Pins for bronze bushing and straight roller bearing should have a running clearnace of .031 Inch/ sheave of end play and should be adjusted accordingly	Industry Standard	(✓) YES ( ) NO
	Inspect Hook or shackle to swivel case clearance is set at .031 to .062 inch, Clearance exceeding .12 to .18 (ONLY CROSBY BRAND)	OEM Crosby	(✓) YES ( ) NO
	OEM STANDARD RECOMMEND that Crane block removal from service untill replaced and repair following below	**OEM STANDARD**	
	- Elongated center pin and hook trunnion holes exceeding 5% of Original diameter	**OEM STANDARD**	(✓) YES ( ) NO As found OK
	-Material loss due to wear exceeding 10% of original section	**OEM STANDARD**	(✓) YES ( ) NO As found OK
	-Sheave wire rop groove diameter smaller than 2.5%	**OEM STANDARD**	(✓) YES ( ) NO As found OK
	Loosened tie bolts nuts, center pin round nuts, check weight cap screws and hook nut cap screws. Tie bolt nuts to be torqued to 35-40 ft.Lbs and restaked, all other fasteners wrench tight	**OEM STANDARD**	(✓) YES ( ) NO
	Throat opening - any distortion causeing an increase in throat opening of 5% not ot exceed 1/4 in. (6 mm.)(or as recommended by the manufacturer)	**ASME B30.10**	(✓) YES ( ) NO
	Inspect rope track worn in sheave groove, sheave must be resurface or replace	API RP 2D	(✓) YES ( ) NO
	Ensure the load block is not using "Cast Iron" cheek weights they can not be used as per API	API SPEC 2C	(✓) YES ( ) NO As found OK
	Determine if all hooks are equipped with properly operating safety latches and check for proper functioning	API RP 2D	(✓) YES ( ) NO
	Lubricate sheave bearings and swivels	OEM Manual	(✓) YES ( ) NO
	Re-thighten nut firmly to point at which trunion will just rotate, the Re-tighten set-screw in nut and thread condition as in the picture below,	Industry Standard	(✓) YES ( ) NO
	Last NDE inspection record	Industry Standard	Last Inspect date 1 May 21
	RECORD LOAD BLOCK INFORMATION : Manufacturer:	OEM Manual	JOHNSON
	Model:	OEM Manual	5-35-T16-RB
	Serial Number:	OEM Manual	10-8124
	Record Load block measurements and details for future comparison with historical data ☑	Industry Standard	(✓) YES ( ) NO
	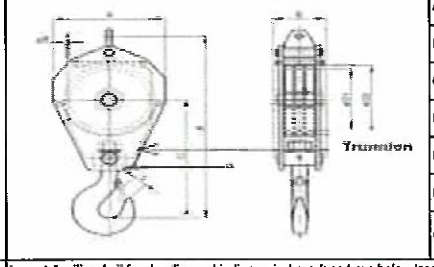 A - Block OD	Industry Standard	90 mm/ inch
	B - Block length	Industry Standard	41.5 mm/ inch
	C - Center of Pin to hook Saddle	Industry Standard	32 mm/ inch
	D1 - Sheave Diameter	Industry Standard	16 mm/ inch
	E - Block Width	Industry Standard	38 mm/ inch
	F - Throat Opening	Industry Standard	20 mm/ inch
	G - Trunnion	Industry Standard	0.97 mm/ inch
Aux. Ball	**Inspect Auxiliary ball** for cleanliness, binding swivel, work pad-eye hole. Inspect the hook damage, excessive wear to the hook safety latch, Bent connector plates,Severe corrosion pitting, hook swivel trunnions, thrust collar, securing, damage or missing lubrication fittings,Loose, missing or damaged retaining nuts, cotter pins or swivel set screws ,Missing or illegible rating and warning tags, proper lubrication, cracks and gouges, and if visibly bent or twisted or has been exposed to welding or arching.	Industry Standard	(✓) YES ( ) NO
	Hook: Tip has been bent more than 10 degree out of plane from the hook body	Industry Standard/API RP2D7	(✓) YES ( ) NO
	OEM STANDARD recommend that Crane overhaul ball removal from service untill replaced and repair following below	**OEM STANDARD**	
	- Elongated ball pin holes, hook latch pin holes and swivel eye exceeding 5% of original diameter,	**OEM STANDARD**	(✓) YES ( ) NO As found OK
	-Swivel end play gap exceeding .08". Excessive end play indicates damaged internal set screw	**OEM STANDARD**	(✓) YES ( ) NO As found OK
	-Material loss due to wear exceeding 10% of original section	**OEM STANDARD**	(✓) YES ( ) NO As found OK
	Throat opening - any distortion causeing an increase in throat opening of 5% not ot exceed 1/4 in. (6 mm.)(or as recommended by the manufacturer)	**ASME B30.10**	(✓) YES ( ) NO
	All hooks that lift personnel are to have a positive locking safety latch **locking Pin to be used while lifting personnel**	API RP 2D	(✓) YES ( ) NO
	*** Temperature Effected : When hooks are to be used at temperature above 400° F. (204°C) or below -40°F (-40°C), the hook manufacturer or a qualified person should be consulted *** Chemically Active Environment : The strength of hooks can be affected by chemically active environments, such as caustic or acid substances or fumes. The hook manufacturer or qualified person should be consulted before hooks are used in chemically active environment	**ASME B30.10**	
	Verify to ensure nut firmly at which trunion rotate. Identify to set-screw in nut/ swivel/ counter pin and thread condition.	Industry Standard	( ) YES ( ) NO
	Last NDE inspection record	Industry Standard	Last Inspect date 9 May 21
	RECORD AUX BALL INFORMATION : Manufacturer:	OEM Manual	McKISSICK
	Model:	OEM Manual	BB07T285
	Serial Number:	OEM Manual	03642553
	Record Auxiliary Ball measurements and details for future comparison with historical data: For Model MB07T200E ONLY	Industry Standard	
	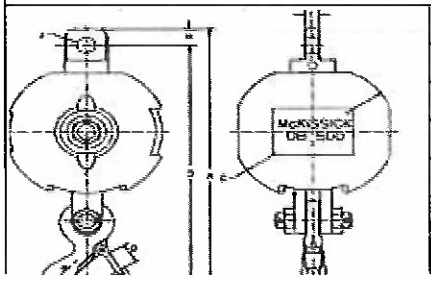 AA Dimensions 3.0 Inch	Industry Standard	3.0 mm/ inch
	A Dimensions 24.89 Inch	Industry Standard	24.89 mm/ inch
	B Dimensions 21.71 Inch	Industry Standard	22.71 mm/ inch
	C Dimensions 12.50 Inch	Industry Standard	12.60 mm/ inch
	D Dimensions 1.61 Inch	Industry Standard	1.61 mm/ inch
	E Dimensions 1.81 Inch	Industry Standard	1.81 mm/ inch
	F Dimensions 1.38 Inch	Industry Standard	1.38 mm/ inch

SYSTEM	TASK		Specification	Record/Reading
	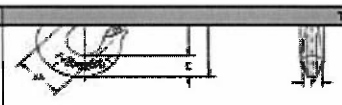	H Dimensions 1.38 Inch	Industry Standard	3.98 mm/ inch
		I Dimensions 0.88 Inch	Industry Standard	0.88 mm/ inch
		J Dimensions 1.31 Inch	Industry Standard	1.81 mm/ inch
	Record Auxillary Ball measurements and details for future comparison with historical data: For Model OB 7EE 200-4		Industry Standard	
	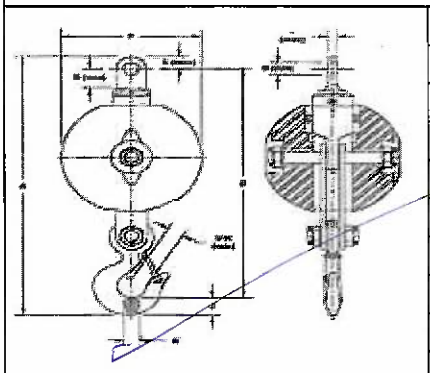	A Dimensions 27.25 Inch	Industry Standard	_____mm/ inch
		B Dimensions 24.10 Inch	Industry Standard	_____mm/ inch
		F Dimensions 12.00 Inch	Industry Standard	_____mm/ inch
		H-H Dimensions 1.38 Inch	Industry Standard	_____mm/ inch
		J Dimensions 1.81 Inch	Industry Standard	_____mm/ inch
		K Dimensions 1.46 Inch	Industry Standard	_____mm/ inch
		R Dimensions 1.55 Inch	Industry Standard	_____mm/ inch
		S Dimensions 1.34 Inch	Industry Standard	_____mm/ inch
		T Dimensions 1.03 Inch	Industry Standard	_____mm/ inch
		U Dimensions 1.31 Inch	Industry Standard	_____mm/ inch
Safety system	Check Condition anti - two block , hanging chain ,eye bolts , fix bolts , shackle for missing , corrosion , erosion , deformation		API RP 2D	✓ YES ( ) NO
	Check anti - two block kick out plate for freely movement		Company Spec/Standard	✓ YES ( ) NO
	Check anti-2-block device proper function of Main winch		Company Spec/Standard	✓ Function ( ) False
	Check anti-2-block device proper function of Aux. winch		Company Spec/Standard	✓ Function ( ) False
	Check relation of boom radius and boom angle (lowest, middle, highest) with refrence to load chart. Recharge fluid W-15 to load indicator, if required.		API RP 2D	✓ YES ( ) NO
	Functional test of emergency lowering system (See procedure in Emergency Load Lowering Box). **Note:** Keep for 1 Yr PM to sustain crane mechanic competency. **Caution:** Function test must be performed on top deck with max 2-foot height.		Company Spec/Standard	✓ YES ( ) NO ( ) N/A
	Visually check emergency load lowering kit. Ensure EMERGENCY LOWERING PROCEDURE and MATERIAL LIST are in the box. - Ensure ALL Items shown on the list are in the box and in good condition - **SECURE THE BOX WITH A TIE WRAP.**		Company Spec/Standard	✓) YES ( ) NO ( ) N/A
Slew Mechanism	Visually check for damage and excessive wear on gear teeth		OEM Manual	( ) YES ( ) NO
	Visually check slew gear box in the area of oil seal for any leaks		API RP 2D	( ) YES ( ) NO
	RECORD SLEW GEAR BOX INFORMATION :	Manufacturer:	OEM Manual	ESK
		Model:	OEM Manual	200ADK4-D1
		Serial Number:	OEM Manual	103486
	CHECK and RE-TORQUE swing drive gearbox mounting bolts at following brands: - ESKRIDGE, Model: 250 = 150 FT-LBS		API RP 2D	✓) Yes ( ) No
	Check swing gearbox oil level/condition, top up if required	Meropa 220	OEM Manual	✓ YES ( ) NO
	Monitor slew gearbox oil condition by visually examine for burnt smell, metal particles, and/or other contaminants, record and change if found.	Meropa 220	OEM Manual	✓ CHANGE OIL ( ) NOT CHANGE OIL
	Change slew gear box oil	Meropa 220	OEM Manual	✓ CHANGE OIL ( ) NOT CHANGE OIL
	Grease all pivot points of slew ring (bearing)		OEM Manual	✓ YES ( ) NO
	Grease open gears (pinion)		OEM Manual	✓ YES ( ) NO
	Rotate crane 360 degree and check smoothness of operation		OEM Manual	✓ YES ( ) NO
	Check swing drive static parking brake for proper operation **Caution: DO NOT stop the swing of the crane with this static brake (parking brake)**		OEM Manual	✓ YES ( ) NO
	Check swing drive dynamic parking brake for proper operation		OEM Manual	✓ YES ( ) NO
	Check swing lock mechanism condition; corrosion ,dent , loos all part,worn and wear		OEM Manual	✓ YES ( ) NO As found condition: OK
	Check swing lock mechanism freely lock and unlock for function. **Check and inspect for hydraulic for leaks on actuator model.**		OEM Manual	✓ YES ( ) NO As found condition: OK
	Check condition of slew ring bolts e.g. Bolt grade and washers. **Caution:** Use only hardened flat washers under head of bolt. Do not use lock washers, or regular flat washers.		Industry Standard	✓ YES ( ) NO As found condition: OK
	Monitor ball-ring grease sample. If found wear and tear particles, take sample and send to lab. **Wear assessment by grease sample analysis—wear may be monitored by periodic grease sample analysis as describe in this section. Grease samples should be collected every twelve months as a minimum and the results of the analysis recorded; this period should be shortened if obvious metal or contaminants are present.		API PR 2D	( ) SEND TO LAB ✓ NOT SEND TO LAB As found: OK
	Verify crane condition and load test as separate procedure. **Table 1—Static/Onboard Test Load and Radius** Static/Onboard Rated Load at a Specific Radius lb (kg) / Test Loads in Excess of Static/Onboard Rated Load at a Specific Radius ≤ 40,000 (18,144) / 25 % > 40,000 ≤ 100,000 (> 18,144 ≤ 45,359) / 10,000 lb (4536 kg) > 100,000 (45,359) / 10 %		API 2C	( ) YES ( ) NO Specific test load 150 lbs.
	Verify crane condition and load test as separate procedure. " Record crane load test in load test form."		Company Standard	✓) YES ( ) NO

SYSTEM	TASK	Specification	Record/Reading

Risk Level Definitions: The following 3 levels indicate the impact the noted deficiency poses to the operation or structural integrity of the equipment:

Level 1 = Incidental	Level #2 = Restricted Operation	Level #3 =Out of Service
Minor deficiency that is recommended to be promptly addressed, but poses no safety and/or environmental risk. The crane can still be operated at full duty.	Deficiency identified that has the potential to limit, de-rate or damage the crane, its surroundings and/or the environment. The duty and locked/ tagged out until the crane's duty and operation should be de-rated or service restricted.	The crane should be removed from duty and locked/ tagged out until the deficiency is rectified.

System:	Risk Level:	Component: / Location:		In Accordance with: / Date Originated:	
WINCH	1	Main winch			4-3-26
Description:	oil gear seeping at drum closer				
Recommended Action:	~~Replace~~ waiting ~~BB~~ for spare parts.				
Recommended urgency timeframe for corrective action:		Completed Date:		Completed By:	

System:	Risk Level:	Component: / Location:		In Accordance with: / Date Originated:	
GD	2	Hyd. hose			
Description:	Hyd. hose #8 x 2 set				
Recommended Action:					
Recommended urgency timeframe for corrective action:		Completed Date:		Completed By:	

System:	Risk Level:	Component: / Location:		In Accordance with: / Date Originated:	
Description:					
Recommended Action:					
Recommended urgency timeframe for corrective action:		Completed Date:		Completed By:	

System:	Risk Level:	Component: / Location:		In Accordance with: / Date Originated:	
Description:					
Recommended Action:					
Recommended urgency timeframe for corrective action:		Completed Date:		Completed By:	

System:	Risk Level:	Component: / Location:		In Accordance with: / Date Originated:	
Description:					
Recommended Action:					
Recommended urgency timeframe for corrective action:		Completed Date:		Completed By:	

System:	Risk Level:	Component: / Location:		In Accordance with: / Date Originated:	
Description:					
Recommended Action:					
Recommended urgency timeframe for corrective action:		Completed Date:		Completed By:	

Done by 4-Feb-26

[redacted]

CRANE Mfg. : Nautilus
MODEL: 180B-80
SERIAL NUMBER :

LOCATION
BNWL

DATA BASE - PM JOB TASK CARD 3Y PM
WO: 1245320

Crew Size:
Estimated Hours:

SYSTEM	TASK		Specification	Record/Reading
Safety	Perform Job Safety Analysis (JSA)		Company Spec/Standard	(✓) YES ( ) NO
	Obtain "COMPANY' PERMIT TO WORK		Company Spec/Standard	(✓) YES ( ) NO
	Perform Tool Box Talk		Company Spec/Standard	(✓) YES ( ) NO
	BEFORE/AFTER JOB EXECUTION: Ensure to comply with isolation procedure (LOCK OUT/TAG OUT, WARNING SIGNS and BARRIERS).		Company Spec/Standard	(✓) YES ( ) NO
Required Tools	Insure proper tools are available at the job site		Company Spec/Standard	(✓) YES ( ) NO
	Tool bag		Company Spec/Standard	(✓) YES ( ) NO
	Tool box		Company Spec/Standard	(✓) YES ( ) NO
	Tool Container		Company Spec/Standard	(✓) YES ( ) NO
	MPI equipment and operator		Company Spec/Standard	(✓) YES ( ) NO
	Check safety harness Software and Hardware should be good condition before use		Company Spec/Standard	(✓) YES ( ) NO
	Check Rescue Equipment ready to use onsite		Company Spec/Standard	(✓) YES ( ) NO
	Portable Scaffolding and Crew if require		Company Spec/Standard	(✓) YES ( ) NO
Lubricants	Insure proper lubricants and consumables are available at the job site.		Company Spec/Standard	(✓) YES ( ) NO
	Hydraulic System - Hydraulic Oil	Rando HD-68	OEM Manual	(✓) YES ( ) NO
	Slew Gearbox - Gear Oil	Meropa 220	OEM Manual	(✓) YES ( ) NO
	Auxiliary Hoist - Gear Oil	Meropa 220	OEM Manual	(✓) YES ( ) NO
	Main Hoist - Gear Oil	Meropa 220	OEM Manual	(✓) YES ( ) NO
	Grease Points - Lithium Based **IT MUST NOT INCLUDE MOLYBDENUM DISULPHIDE**	MULTIFAK EP#2	OEM Manual	(✓) YES ( ) NO
	Open Gear Teeth - Open Gear Lube highly water resistant and of an adhesive nature.	OMEGA 73	OEM Manual	(✓) YES ( ) NO
	Pneumatic Lubricator	SAE Grade 10	OEM Manual	( ) YES (✓) NO
	Wire rope Lubricant Company preferred grade	Birlube 70	OEM Manual	(✓) YES ( ) NO
	Engine Oil - SAE Grade 15W-40 (Delo Gold)	15W-40	OEM Manual	(✓) YES ( ) NO
	Safe Load Indicator fluid	W-15	OEM Manual	(✓) YES ( ) NO
	Engine Radiator - Should have radiator preservatives additives	Cat® SCA	OEM Manual	(✓) YES ( ) NO
Consumables	Spray Cold Galvanize		Company Spec/Standard	(✓) YES ( ) NO
	Denso Tape		Company Spec/Standard	(✓) YES ( ) NO
	WD-40		Company Spec/Standard	(✓) YES ( ) NO
History Review	Before starting work, tasks preparation at least 1 day prior to starting work: 1. Review history PM/ CM from Roving Team, 2. Review last PM/ CM/ PMI from Crane Mech, 3. List out all punch list and prepare parts. 4. Review last Certificate task performed		API RP 2D	(✓) YES ( ) NO
	Require to update part history from Crane Mech on following main compenents to ensure the right parts are prepared: - Aux/ Main/ Boom Cylinder, Engine, Swing Gearbox, etc. Reference: Crane OEM information of each part need to be recorded - Manufacturer & Contact info - Model & serial number - Installation date		Company Spec/Standard	(✓) YES ( ) NO
	Review history data from Certificates and incorporate into current PM: - Pull Test Certificates (ongoing update, 4 yr. history). - Load Test Certificates (ongoing update, 4 yr. history). - Wire Rope Certifications (running rope and standing rope) (life of rope). - Hoist Certifications for hoist classified as "personnel handling" hoist.		API RP 2D	(✓) YES ( ) NO
	Review Last Preventative Maintenance Records (Inspection Reports) - Pre-use (Pre-Post Inspection) - 6 Monthly (API RP 2D Not Defined, Company Standard) - 1 Yearly (API RP 2D Defined Annual Inspection)		API RP 2D	(✓) YES ( ) NO
Lifting Gear Preparation	Visually Inspect (Sling, sling hooks and shackles) include Websling / Chain		Company Spec/Standard	(✓) YES ( ) NO
	Check color code / Tag & date inspection		Company Spec/Standard	(✓) YES ( ) NO
General	Determine if access route to-from crane is clean, safe, unobstructed and adequately protected against falls, tripping and slipping		Company Spec/Standard	(✓) YES ( ) NO
	Check drain lines and drip pans for deterioration		API RP 2D	(✓) YES ( ) NO
	Remove any sediment collected in the bottom of drip pans		Industry Standard	(✓) YES ( ) NO
	Check for general crane and components for loss of protective coating and corrosion		Industry Standard	(✓) YES ( ) NO
	Check for missing or loose ,corrosion, deformation pins, pin keepers, bolts, nuts, fasteners of all laders, cages and working platform		API RP 2D	( ) YES ( ) NO
	Apply grease to exposed grease parts (control valve spools, ball-ring gear, parking brake valve, etc.)		OEM Manual	(✓) YES ( ) NO
Prime Mover	Engine Caterpillar		OEM Manual	(✓) YES ( ) NO
	CATERPILLAR MODEL 3406	S/N.:	OEM Manual	6TB21977
		AR.No.:	OEM Manual	4W-3798
	Change engine lube oil & oil filter and check the condition of old oil. As found ; Not Contaminated		OEM Manual	(✓) YES ( ) NO
	Check diesel tank level, top up if required.		OEM Manual	(✓) YES ( ) NO
	Check / Clean crankcase breather cap. Change if required		OEM Manual	(✓) YES ( ) NO
	Check / Clean air cleaner filter, Replace if require. (Note : include inspect air cleaner housing)		OEM Manual	(✓) YES ( ) NO
	Check condition and inspect of the radiator and cap.		OEM Manual	(✓) YES ( ) NO
	Check for any signs of leaks on or around the engine ie; Crankshaft seal for front & rear seal , Engine oil cooler. As found; Not leak		OEM Manual	(✓) YES ( ) NO
	Check condition exhaust system for leaks, corrosion, insulation and general. As found ; Not leak		OEM Manual	(✓) YES ( ) NO
	Check condition of all engie hoses and tube. (Fuel supply,Cooling system and Lube oil system. As found; Good		OEM Manual	(✓) YES ( ) NO
	Drain water and sediment form diesel tank. As found ; Good		OEM Manual	(✓) YES ( ) NO
	Check / Clean Diesel tank level sightglass and diesel tag.		OEM Manual	(✓) YES ( ) NO
	Apply grease of fan bearing/shaft.		OEM Manual	(✓) YES ( ) NO
	Check and inspect the vibration damper and pulley. As found ; Good		OEM Manual	(✓) YES ( ) NO
	Change water coolant and check condition base of water coolant and record PH.		OEM Manual	(✓) YES ( ) NO
	COOLANT PARAMETERS (PH):	6 or higher	OEM Manual	PH = 7
	HOUR METER PARAMETERS:	LAST READING 3108 HRS	OEM Manual	3108 HRS

[redacted] / 24 Feb 25

SYSTEM	TASK			Specification	Record/Reading
	Check and retigthen the bolts of all engine base. / Inspection mouting rubber. As found : Good			OEM Manual	(✓) YES ( ) NO
	Inspect the engine fan blades that there is a break is it severely distorted or rusted. As found : Good			OEM Manual	( ) YES (✓) NO
	Change and adjust the tension engine belts. Remark; To check belt Tension, after has engine run more than 30 minules apply 400 N (90 lbs) of force midway between the pulleys. Correctly adjusted belts with deflect 13 to 19 mm (1/2 to 3/4 inch).			OEM Manual	(✓) YES ( ) NO
	Check engine HYD starter drive gear bendix and fly wheel gear teeth condition and record. **Replace if required*			OEM Manual	(✓) YES ( ) NO Bendix Gear : 90 % Fly wheel Gear teeth : 90 %
	Check and inspect condition the Bendix of hydraulic Starter motor.			OEM Manual	( ) YES ( ) NO
	Lubricate and check engine throttle system.			OEM Manual	(✓) YES ( ) NO
	Determine if the tachometer operates properly: Record Value of Idle & Max Speed (RPMs) Note: Too low Idle (RPMS) will cause excessive worn at winch brake			OEM Manual	
	ENGINE RPM SPECIFIC	IDLE SPEED	850-950 RPM	OEM Manual	850 RPM
		MAX SPEED	2200 RPM	OEM Manual	2200 RPM
	Confirm engine oil pressure as per Parameters below and Record Value:			OEM Manual	
	ENGINE OIL PRESSURE SPECIFIC	Minimum:	Not lower then 30 PSI	OEM Manual	30 PSI
		Maximum	70 PSI	OEM Manual	70 PSI
	Confirm engine fuel pressure Parameters are correct and Record Value:			OEM Manual	
	ENGINE FUEL PRESSURE SPECIFIC** **Note;Fuel pressure at high idle is lower than 105 kPa (15 psi)RAMETERS*	Normal	>35 PSI.	OEM Manual	(✓) YES ( ) NO
	Confirm engine temperature Parameters and Record Value:			OEM Manual	
	ENGINE WATER TEMP SPECIFIC	NORMAL	120 - 180 degrees F	OEM Manual	175 F
	Test engine SAFETY DEVICE- ensure engine kill cable shuts off FUEL supply			API RP 2D	(✓) Function ( ) False
	Test engine SAFETY DEVICE- ensure EMERGENCY KILL CABLE - shuts off AIR supply			API RP 2D	(✓) Function ( ) False
	Test engine SAFETY DEVICE- ensure ENGINE low lube oil - releases OIL PRESSURE to ctivate ~~Alarm Air System~~ ****Note*** Engine oil pressure low alarm at 20 PSI* Shutdown engine			Company Spec/Standard	(✓) Function ( ) False
	Test engine SAFETY DEVICE- ensure HIGH TEMP - releases OIL PRESSURE to ~~activate- Alarm Air System~~ Shutdown engine			Company Spec/Standard	(✓) Function ( ) False
	Change water separator filter.			OEM Manual	( ) YES N/A ( ) NO
	Check the general conditionand functioning of turbocharger. Note;			OEM Manual	( ) Leak (✓) Not Leak
	Change fuel filter and inspect the primary hand pump.			OEM Manual	(✓) YES ( ) NO
	Check water temperator regulator.(Thermostat). Change if require refer from cooling temperature.			OEM Manual	(✓) YES ( ) NO
	Check general condition the Governor and control linkage. (Inspect the throtle linkage)			OEM Manual	(✓) YES ( ) NO
	Check or adjust the engine valve lash and bridge valve. (Intake vale = 0.015", Exhaust valve = 0.030")			OEM Manual	(✓) YES ( ) NO
	Check condition wear of pump drive spline and record ***Note; Remaining 70% of Original Spline Surface must be replace.*			Company Spec/Standard	85 % Remaining
	Check condition wear of adaptor Coulping spline shaft and record ***Note; Remaining 70% of Original adaptor Coulping spline shaft Surface must be replace.*			Company Spec/Standard	95 % Remaining
	Check condition wear of Coulping spline and record. Re-tigthen of all lock bolts. ***Note; Remaining 70% of Original adaptor Coulping spline shaft Surface must be replace.*			Company Spec/Standard	95 % Remaining
Hydraulic Start System (Apply for C2-Remote P/F Only)	Check pressure system at the pressure gauge which should reach 3,000 PSI as standard when the system is FULLY charged. Record Value. (As the system cools down, the pressure should drop slightly and finally stabilised.)			OEM Manual	( ) YES ( ) NO
	Visually inspect all hydraulic connections and hoses for leaks and retighten if necessary. (Caution: This should NOT be done if the system is under pressure.) 1. Slowly release system pressure by loosening the bleed screw on top of the hand pump. 2. Ensure no pressure remains, retighten the suspected leak fitting or replace the damaged hose or component. 3. Retighten the bleed screw on the hand pump. 4. Pump the system up to 2200 - 2600 PSI 5. Inspect that the leak was eliminated.			OEM Manual	(✓) YES ( ) NO
	Function check Accumulator Pre-charge. (Caution: This should NOT be done if the system is under pressure.) 1. Shut the engine off, release system pressure via the bleed screw on top of the hand pump 2. Retighten bleed screw and actuate the hand pump. The pressure will rapidly increase and then stabilised. This pressure is related to accumulator gas pre-charge pressure. 4. If the pressure rapidly increase to 3000 PSI, it indicates that the accumulator has lost its gas charge. 5. Troubleshoot as necessary			OEM Manual	(✓) YES ( ) NO
	Check function rechaging system by function boom down while the engine running. 1. The crane engine is running at 1,000-1500 RPM. 2. Slowly control lever boom function down for charging pressure to accumulator. 3. This pressure should read on prssure gauge between 2200 - 2600 PSI depending on the recharge ratio 80% std. (90% optional). Record Pressure Value.			OEM Manual	2600 PSI
	Check Nitrogen pressure in Accumulator ***Note**spec @ 1,500 psi as follow schematic and if found pressure loss below 1400 PSI then prepare recharge nitrogen in system			OEM Manual	1500 PSI
	Every 36 months or 2000 engine running hours (approximately 1500 starts) replace the high pressure filter.			OEM Manual	(✓) YES ( ) NO
Hoist / Brakes	Visually check a hoist exhibits erratic operation and/or unusual noise, the hoist must be taken out of service until it is inspected and serviced by a qualified technician. Continued operation of a hoist with a defect in a critical component may lead to loss of load control, property damage, serious injury or death.			OEM Manual	(✓) YES ( ) NO
	Visual exteriors of hoist, frames, drums and flanges for damage, leaks, cracks and wear and repair/replace as required to maintain the structural integrity of the hoist.			OEM Manual	(✓) YES ( ) NO
	Check all hoist mounting pins, bolts or other fasteners and replace or tighten as necessary.			OEM Manual	(✓) YES ( ) NO
	Lubricant level must be maintained between the minimum and maximum levels; midway up sight glass or at bottom of level plug port as equipped and check/clean plug vent. Use only the recommended type of lubricant.			OEM Manual	(✓) YES ( ) NO
	Inspect Brake Valve Opening Pressure test V/V 1-1/4" PD Series : no lower than 550 PSI V/V 1-1/2" CH Series : no lower than 575 PSI	Main		Braden Bulletin 527-Dec,1996	600 PSI
		Aux			600 PSI
	Inspect Brake cylinder opening pressure test. CH/PD Series : 400-450 PSI.	Main		Industry Standard	400 PSI
		Aux			400 PSI
	Measure differancian of static and dynamic brake. CH/PD Series : 150-250 PSI.	Main		Industry Standard	200 PSI
		Aux			200 PSI
	Check for external oil leaks and repair as necessary. This is extremely important due to the accelerated wear that will result from insufficient lubricating oil in the hoist.			OEM Manual	(✓) YES ( ) NO
	RECORD BOOM CYLINDER INFORMATION :	Boom cylinder Diameter:		OEM Manual	DIA: 12 Inch

[redacted] / 24 Feb 25

SYSTEM	TASK			Specification	Record/Reading
		CY Number:		OEM Manual	L=7892-6 R=7892-8
		Serial Number:		OEM Manual	L=9741 R=9388
	RECORD MAIN HOIST INFORMATION :	Manufacturer:		OEM Manual	Braden
		Model:		OEM Manual	CH210A-3LH0-01-1
		Serial Number:		OEM Manual	030012
	Check MAIN HOIST for proper operation and good condition			API RP 2D	(✓) YES ( ) NO
	Brake test & record pressure of MAIN HOIST.			OEM Manual	(✓) YES ( ) NO As found On Standard
	Change main hoist gear oil and inspect for small particles in the old oil. ** Refer to Onsite Gear Oil Sample Procedure ** ** Replace and send oil sample to SKL if abnormal ** ** Take photo of Oil Sampling for Reference**			OEM Manual	(✓) YES ( ) NO As found Not Contaminant
	RECORD AUXILIARY HOIST INFORMATION :	Manufacturer:		OEM Manual	Braden
		Model:		OEM Manual	CH150A-2SH0-01-1
		Serial Number:		OEM Manual	
	Check AUXILIARY HOIST for proper operation and good condition			API RP 2D	(✓) YES ( ) NO
	Brake test & record pressure of AUXILIARY HOIST			API RP 2D	(✓) YES ( ) NO
	Change Aux. hoist gear oil and inspect for small particles in the old oil. ** Refer to Onsite Gear Oil Sample Procedure ** ** Replace and send oil sample to SKL if abnormal ** ** Take photo of Oil Sampling for Reference** Please record if any abnormal condition. Note.....			OEM Manual	( ) SEND SKL LAB (✓) NOT SEND SKL LAB
	Check pressre relief Valve: Determine hoistes' relief valve pressure gauge is working and giving accurate measurement by notice whether pressure gauge is vibrating or not. If not, set relief valve pressure in accordance with the schematic and parameters below. Record all readings.			OEM Manual	(✓) YES ( ) NO
	BOOM RELIEF VALVE TEST	Relief Specific:	3,000 PSI	OEM Manual	3000 PSI
	MAIN HOIST RELIEF VALVE TEST	Relief Specific:	2,575 PSI	OEM Manual	2575 PSI
	AUX HOIST RELIEF VALVE TEST	Relief Specific:	2,800 PSI	OEM Manual	2800 PSI
	SWING RELIEF VALVE TEST	Relief Specific:	1,500 PSI	OEM Manual	1500 PSI
	Measure Pressure of hoist motor case drains and Record Value **Reference Bulletin: BRADEN Inspection, Testing, Preventive Maintenance and Special Operating Instructions For Planetary Hoists PB-308 latest edition for further details.**			OEM Manual	
	MAIN HOIST CASE DRAIN for Gear Motor (Down Mode).	PRESSURE	< 100 psi	Company Spec/Standard	10 PSI
	AUX. HOIST CASE DRAIN for Gear Motor (Down Mode).	PRESSURE	< 100 psi	Company Spec/Standard	15 PSI
Hydraulic System	Check hydraulic tank oil level. Oil should be visible in the sight glass. Top up as required (3/4 Tank Minimum)			OEM Manual	(✓) YES ( ) NO
	Check hydraulic oil condition. (Check if running hours are more than 100 hours from last oil change or during Annual inspection) ** Refer to Onsite Hydraulic Oil Sample Procedure ** ** Replace and send oil sample to SKL if abnormal ** ** Take photo of Oil Sampling for Reference**		Rando HD-68	Company Spec/Standard	( ) SEND SKL LAB (✓) NOT SEND SKL LAB
	Inspect hydraulic tank and strainer filter. Change hydraulic oil, If required with lab confirmation.			Company Spec/Standard	(✓) YES ( ) NO
	Drain off 1 liter of oil to remove condensed water. If water is present, drain until water is removed and top up with clean oil			Industry Standard	(✓) YES ( ) NO
	Check for any hydraulic leaks			Industry Standard	(✓) YES ( ) NO
	Check the hydraulic hose, piping and tubing for mechanical damage, corrosion, splits, blisters, cracking or excessive abrasion on the outer surface			API RP 2D	(✓) YES ( ) NO
	Check that all hydraulic hose connections are sound and that all mounting and pivoting connections are secure.			Industry Standard	(✓) YES ( ) NO
	Lubricate hydraulic swivel in pedestal and insure tie down restrains are in place and preventing the swivel from rotating with the crane structure.			OEM Manual	(✓) YES ( ) NO
	Ensure the filler breather on tank is not covered or clogged			Industry Standard	(✓) YES ( ) NO
	Visually inspect for missing or loose pins, pin keepers, bolts, nuts, fasteners on all pumps, motors and valves			API RP 2D	(✓) YES ( ) NO
	* Re-tighten the stud bolt of hydraulic main pump and marking the nut for checking to prevent loosening. Note : Torqe spec model P76, P75, PGP/PGM350 ,PGP/PGM330 = 200 ft-lbs. , for model PGP/PGM315 = 140 ft-lbs. and PGP/PGM365 = 450 ft-lbs.			The Commercial Intertech manual	(✓) YES ( ) NO
	Check the filter bypass indicator, while engine is running			OEM Manual	(✓) YES ( ) NO
	With engine running (after all other items pass inspection), check the system for leaks around fittings, hoses, valves and reservoirs			Industry Standard	(✓) YES ( ) NO
	With engine running, check the source of any unusual noise or vibration that may cause or indicate equipment damage or wear			Industry Standard	(✓) YES ( ) NO
	Ensure all hoses are properly rated for the system, see "Parameters" for each system for details.			Industry Standard	(✓) YES ( ) NO
	Record hydraulic oil operating temperture. Note: Hydraulic fluid overheating temperature is over 180 F degrees or 82 C, degrees (reservoir temperature)			Industry Standard	130 Degree F
	Determine if hydraulic return pressure gauge is working and giving accurate measurements. Record readings				
	RECORD HYDRAULIC RETURN PRESSURE PARAMETERS:		60 PSI "maximum"	OEM Manual	15 PSI
	Check and inspect the hydraulic return filters and seals.			OEM Manual	(✓) YES ( ) NO
	Function Testing and record pressures with engine at :		2,200 RPM	API RP 2D	
	BOOM FUNCTION TEST (Need Crane Mech to verify each platform)			OEM Manual	
	Boom Angle : 60 Degree (Recommend or as applicable) — UP	Cracking pressure	RECORD	OEM Manual	600 PSI
		Full Speed Pressure	RECORD	OEM Manual	800 PSI
	DOWN	Cracking pressure	RECORD	OEM Manual	900 PSI
		Full Speed Pressure	RECORD	OEM Manual	1400 PSI
	MAIN HOIST FUNCTION TEST (Need Crane Mech to verify each platform)			OEM Manual	
	Boom Angle : 60 Degree (Recommend or as applicable) — UP	Cracking pressure	RECORD	OEM Manual	50 PSI
		Full Speed Pressure	RECORD	OEM Manual	700 PSI
	DOWN	Cracking pressure	RECORD	OEM Manual	700 PSI
		Full Speed Pressure	RECORD	OEM Manual	1400 PSI
	AUX HOIST FUNCTION TEST (Need Crane Mech to verify each platform)			OEM Manual	

[redacted] / 24 Feb 25

SYSTEM	TASK				Specification	Record/Reading
	Boom Angle : 60 Degree (Recommend or as applicable)	UP	Cracking pressure	RECORD	OEM Manual	50 PSI
			Full Speed Pressure	RECORD	OEM Manual	500 PSI
		DOWN	Cracking pressure	RECORD	OEM Manual	800 PSI
			Full Speed Pressure	RECORD	OEM Manual	1200 PSI
	SWING FUNCTION TEST (Need Crane Mech to verify each platform)				OEM Manual	
	Boom Angle : 60 Degree (Recommend or as applicable)	LEFT	Cracking pressure	RECORD	OEM Manual	200 PSI
			Full Speed Pressure	RECORD	OEM Manual	700 PSI
		RIGHT	Cracking pressure	RECORD	OEM Manual	200 PSI
			Full Speed Pressure	RECORD	OEM Manual	700 PSI
Electrical system, Crane Boom Lighting and red obstruction light	Check the electrical junction boxes, wires and connections for deterioration, desiccant bags, (replace as required)				Industry Standard	(✓) YES ( ) NO
	Check the condition of the grounding and lighting protection system.				Company Spec/Standard	(✓) YES ( ) NO
	Visually inspect boom floodlight and light guards for loose, missing, corroded				Company Spec/Standard	(✓) YES ( ) NO
	Check condition pipe support , U-bolt ,nuts of boom floodlight and Electric slipring for loose , missing , corroded				Company Spec/Standard	(✓) YES ( ) NO
	Check Electric slipring/swivel for 360° continuous rotation				OEM Munnal	(✓) YES ( ) NO
	Check Water ingress, condensation in electric slipring, red obstruction light and boom floodlight				OEM Munnal	(✓) YES ( ) NO
	Check feely movement and lubricate of boom floodlight				OEM Munnal	(✓) YES ( ) NO
	With generator in operation, intergize all lights to unsure proper function.				API RP 2D	(✓) YES ( ) NO
	Check condition of crane boom lighting and safety net is secured with strong point. * **Safety net should be replace 24 months after installation (2 year)***			Last installation date _____	Company Spec/Standard	(✓) YES ( ) NO
	Check function of crane sound signal				Company Spec/Standard	( ) YES ( ) NO (✓) N/A
	Check function of crane boom lighting at boom upper section				Company Spec/Standard	(✓) YES ( ) NO ( ) N/A
	Check function of crane boom lighting at boom lower section				Company Spec/Standard	(✓) YES ( ) NO ( ) N/A
	Check function of crane boom lighting at winch skid				Company Spec/Standard	(✓) YES ( ) NO ( ) N/A
	Check function of crane boom lighting at crane cabin				Company Spec/Standard	(✓) YES ( ) NO ( ) N/A
	Check function becon light at boom tip				Company Spec/Standard	(✓) YES ( ) NO ( ) N/A
	Inspection wire rope guide & Roller assembly				Company Spec/Standard	(✓) YES ( ) NO
	Visually inspect red obstruction light pipe support, u-bolts, nuts connection to hand rail for loose, missing, corroded				Company Spec/Standard	(✓) YES ( ) NO
	Visually inspect safety sling attached to the red obsruction light and its base for loose, missing, corroded				Company Spec/Standard	(✓) YES ( ) NO
	Visually inspect red obstruction light function. The light is designed to turn on all the time.				Company Spec/Standard	(✓) YES ( ) NO
Operator Control Station	Check general condition of control panel, bolts, paint security, etc.				API RP 2D	(✓) YES ( ) NO
	Determine if there is a serviceable fire extinguisher in the vicinity of the crane				Company Spec/Standard	(✓) YES ( ) NO
	Determine if correct load chart is in use and easily visible for operator				API RP 2D	(✓) YES ( ) NO
	Determine if charts, indicators and hand signal chart are in the cabling and firmly attached				API RP 2D	(✓) YES ( ) NO
	Determine if angle/radius indicator plate is easily visible to operator and is moving freely.				API RP 2D	(✓) YES ( ) NO
	Check condition of control levers and determine if they "dead-man" back to the neutral position.				API RP 2D	(✓) YES ( ) NO
	Check condition of pressure gauges.				API RP 2D	(✓) YES ( ) NO
	Check proper control labels are firmly installed, completely legible and properly labeled				API RP 2D	(✓) YES ( ) NO
	Check controls for freedom-of-movement				API RP 2D	(✓) YES ( ) NO
	Check condition , Leak, freely moement of Dynamic swing break system *** Note; If HYD Oil loose in CYD reservoir must be refill*				OEM Manual	(✓) YES ( ) NO
	Check condition , Leak, freely moement of Accelerate System *** Note; If HYD Oil loose in CYD reservoir must be refill*				OEM Manual	(✓) YES ( ) NO
	Check all safety glass and rubber seal for proper condition				API RP 2D	(✓) YES ( ) NO ( ) N/A
	Function Test Horn. Note;.....				Industry Standard	( ) YES ( ) NO (✓) N/A
	Ensure PRE/POST Check List and Pocket Manual in the cabin. Note;.....				Company Standard	(✓) YES ( ) NO ( ) N/A
Load Indicator System	Visual check on fittings and connections for leaks. Fix leak if any. Note: Good				OEM Manual	(✓) YES ( ) NO
	Should any leaks exist, stop leak and recharge system, refer to maintenance manual				OEM Manual	(✓) YES ( ) NO
	Change and flushing Load cell fluid.				OEM Manual	(✓) YES ( ) NO
	Check general condition of tubbing, hoses, pins bolts, paint, etc.				Industry Standard	(✓) YES ( ) NO
	Insure load cell is free of obstructions				OEM Manual	(✓) YES ( ) NO
	Check condition of gauge(s) face and clean glass as required.				OEM Manual	(✓) YES ( ) NO
	Check the scale's operation and weighing accuracy. (Main Hoist) Remark : Maximum variance +/- 2% Note; On Spec				Company Spec/Standard	(✓) YES ( ) NO ( ) N/A
	Check the scale's operation and weighing accuracy. (Aux. Hoist) Remark : Maximum variance +/- 2% Note; On Spec				Company Spec/Standard	(✓) YES ( ) NO ( ) N/A
	Check the internal casting fluid of weight indicator. top up if required				Industry Standard	(✓) YES ( ) NO ( ) N/A
	Insure SWL tag matches ratings on the Crane Load Chart.				OEM Manual	(✓) YES ( ) NO ( ) N/A
	Insure Boom Length, matches the Crane Load Chart				OEM Manual	(✓) YES ( ) NO ( ) N/A
	Insure Boom Angle measurements and readings match the boom angle indicator.				OEM Manual	(✓) YES ( ) NO ( ) N/A
	Insure Boom Radius measurements indicate the distance from center line of the crane to the hook				OEM Manual	(✓) YES ( ) NO ( ) N/A
	Check Main load cell gap 1/4 (0.250) inch				OEM Manual	(✓) YES ( ) NO ( ) N/A
	Check Aux load cell gap 3/8(0.380) inch (Compression Load Cell Type)				OEM Manual	(✓) YES ( ) NO ( ) N/A
Pedestal & Structure	Visually check Pedestal for chipped/cracked paint, deformation, worn parts, dents, corroded areas, cracks weld, etc.				API RP 2D	(✓) YES ( ) NO
	Check water rain drain at pedestal must be not obstuct				Industry Standard	(✓) YES ( ) NO
	Check pin and cotter pin of pedestal missing , corrosion, wear, damage and exercise pin.				Industry Standard	(✓) YES ( ) NO
	Visually check Base - Plate connection and Base hoist Structure for chipped/cracked paint, deformation, worn parts, dents, corroded areas, cracks weld, etc.				API RP 2D	(✓) YES ( ) NO
	Check A fixed such as Handrial, Walkway, Grating, stationary structure without significant movement in response to waves and currents in normal operating conditions.				API RP 2C	(✓) YES ( ) NO
	Visually check and lubricate maintenance Jib. ***Note*** If on pedestal crane				OEM Manual	(✓) YES ( ) NO ( ) N/A

[redacted] / 24 Feb 25

SYSTEM	TASK	Specification	Record/Reading
	Check maintenance jib is secure firmly. ***Note*** If on pedestal crane	OEM Manual	(✓) YES ( ) NO ( ) N/A
Box Boom & Luffing CYD	Check and Verify entire box boom and Boom CYD for loss of protective coating and corrosion. Note; Good	API RP 2D	(✓) YES ( ) NO
	Check and Verify entire box boom and Boom CYD for chipped/cracked paint, deformation, worn parts, dents, corroded areas, cracks, etc. Note; Good	API RP 2D	(✓) YES ( ) NO
	Check and Verify boom end connections, for bends, dents, corroded areas, cracked welds, and signs of mechanical damage, wear, etc. **any deviation should be reported**	API RP 2D	(✓) YES ( ) NO
	Check and Verify boom rest and wooden support to ensure it's in good condition	API RP 2D	(✓) YES ( ) NO
	Inspect pin and pin holes of Upper tank and Lower tank for excessive clearance	OEM Manual	(✓) YES ( ) NO
	BOOM CYLINDER PIN MAXIMUM TOLERANCE — 0.125 inch (3mm)	Industry Standard	As found 0.022
	Check BOOM CYLINDERS for proper operation and good condition	API RP 2D	(✓) YES ( ) NO
	Check Boom cylinder barrels and rods for leaks, mechanical damage and corrosion	Industry Standard	(✓) YES ( ) NO
	Check and measurement boom foot pin and connection pins for clearance	Industry Standard	
	BOOM FOOT PINS & BOOM BOX CONNECTER PIN TOLERANCE — 0.125 Inch (3mm)	Industry Standard	
	Boom Foot Pin Tolerance	Industry Standard	0.028 inch
	Boom Box Connecter Pin Tolerance	Industry Standard	0.015 inch
	Check connecting bolts of box boom loose, corrosion, wear, damage	OEM Manual	(✓) YES ( ) NO
	Lubricate boom foot pins and bushings	OEM Manual	(✓) YES ( ) NO
	Lubricate boom cylinder pins, bearings and bushings	OEM Manual	(✓) YES ( ) NO
	Boom function test angle/radius to correction **Note; The cylinder(s) mechanism shall be capable of elevating the boom from a minimum of zero degrees to the maximum recommended boom angle.	API RP 2C	(✓) YES ( ) NO
	Operation functional test and verify Boom Creeping down **Note ; Test at angle 60°	Industry Standard	(✓) YES ( ) NO As found Good
Wire Rope	Determine if parts-of-line match parts of line on the load chart in the crane cabin.	API RP 2D	(✓) YES ( ) NO
	Determine if visible portion of wire rope adequately lubricated. If not lubricate wire rope	API RP 2D	(✓) YES ( ) NO
	For each layer of wire rope on drum, check that all rope is parallel and each crossover point at hoist flanges is correct	API RP 2D	(✓) YES ( ) NO
	The top layer of rope must not be lower to the flange tips 2.5 in for Smooth drum,2 in for groove drum or 2.5 times of wire rope diameter	API RP 2C	(✓) YES ( ) NO
	Inspect wire rope for, kinking, crushing, broken wires, necking down of rope diameter, worn outside wires, corroded or broken wires at end connection, cutting or unstringing.	API RP 2D	(✓) YES ( ) NO As found Good
	NoteRunning Ropes of rotation-resistant construction used in the main or auxiliary Hoist: - Four (4) Randomly distributed broken wires within 30 rope diameter - Two (2) broken wires in one stand within 6 rope diameter	API RP2D Edition 7	(✓) YES ( ) NO As found
	One valley break can indicate internal rope damage requiring close inspection of this section of the rope. When one or more valley breaks are found in one lay length the rope should be retired.	API RP2D Edition 7	(✓) YES ( ) NO As found Good
	Reductions for the rope diameter, from initial wire rope dimensional measurements, in a nonworking area (an area away from the sheaves) compared to the lowest diameter of rope measured in three working areas (areas where the rope regularly goes over a sheave) of more than the following is observed: — 3/64 in. (0.047 in.) (1.2 mm) for diameters up to and including 3/4 in. (19.1 mm); — 1/16 in. (0.062 in.) (1.6 mm) for diameters of 7/8 in. to 1-1/8 in. (22.2 mm to 28.6 mm); — 3/32 in. (0.093 in.) (0.8 mm) for diameter of 1-1/4 in. to 1-1/2 in. (31.8 mm to 38.1 mm); — For rope diameters greater than 1-1/2 in., a 5 % diameter loss from baseline measurement. —Wear of one-third the original diameter of the outside individual wires.	API RP2D Edition 7	(✓) YES ( ) NO As found dimension Good
	Increase in the length of an individual rope lay is observed. This increase in lay length and accompanying reduction in diameter can be caused by failure of the core. This can occur more readily in ropes or rotation-resistant construction.	API RP2D Edition 7	(✓) YES ( ) NO As found Good
	-Inspection and Verify running and standing rope from heat effect **Note; Not more than 250°C -There is evidence of heat damage from any source (i.e. engine exhaust, flare towers, stress corrosion cracking, etc.). Heat can be generated by passing a rope over a frozen or non-turning sheave, contact with structural members of the crane, improperly grounded welding leads or lightning strikes	Industry Standard	(✓) YES ( ) NO As found Good
	With the boom at the highest possible angle and the main load block or overhaul ball at the water level, ensure there is a minimum of 5 wraps of wire-rope remaining on the drums. Note: (Thai law, requires minimum of 2 wraps)	API SPEC 2C / Thai Law	(✓) YES ( ) NO
	Reference: · Running rope safety factor not less than 6 for wire rope that are running wire, (Thai law; Wire rope nominal breaking strength x number parts of line / Design factor 6) · Standing rope safety factor not less than 3.5 for wire rope that are stay cables, (Thai law)	Thai Law	(✓) YES ( ) NO ( ) N/A
	Measure and record nominal diameter of "running ropes"main and auxiliary (particularly on drum, equalizer sheave and at sockets, clips and dead end points) *****Nominal = several measurements added together divided by Number of measurements*****	API RP 2D	(✓) YES ( ) NO
	Inspect wire rope and record dimension.	API RP 2D	
	MAIN WIRE ROPE OD: — FULL DRUM	OEM Manual	0.770 inch
	MAIN WIRE ROPE OD: — HALF DRUM	OEM Manual	0.763 inch
	MAIN WIRE ROPE OD: — WATER LEVEL	OEM Manual	0.765 inch
	AUX WIRE ROPE OD: — FULL DRUM	OEM Manual	0.777 inch
	AUX WIRE ROPE OD: — HALF DRUM	OEM Manual	0.775 inch
	AUX WIRE ROPE OD: — WATER LEVEL	OEM Manual	0.770 inch
	Slip-Cut 1 meter of all ropes at the wedge socket and re-wedge to prevent rust inside of wedge socket (at outward end of rope, not on hoist drum) Dead end tail length is never less than 6 inches, or: - Standard 6 to 8 Strand wire rope is not less than 7 times the rope diameter - Rotation Resistant Wire Rope is not less than 20 times the rope diameter	Company Spec/Standard	(✓) YES ( ) NO
	U-bolt and Fist Grip Clips: Extreme care should be exercised to assure proper orientation of U-bolt clips. The U-bolt segment shall be in contact with the wire rope dead-end. The orientation, spacing, torquing, and number of all clips shall be in accordance with the crane manufacture's specifications.	API SPEC 2C	(✓) YES ( ) NO

[redacted] / 24 Feb 25

SYSTEM	TASK	Specification	Record/Reading
	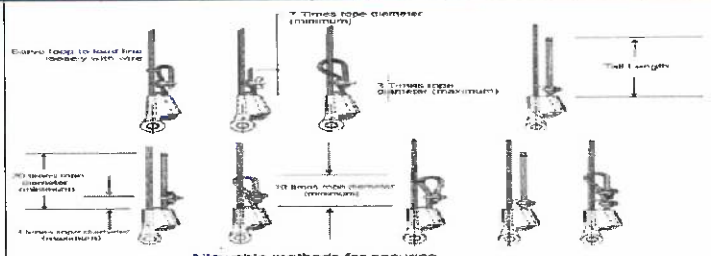 Allowable methods for securing Dead ends of wedge socket attachments	API SPEC 2C	Model ans Size wedge socket. Main hoist. Model..... Size.....3/4..... Aux.Hoist. Model..... Size.....3/4.....
	Verify that the wedge socket and wedge are the correct size for the rope in use and record the size	API SPEC 2C	(✓) YES ( ) NO
Sheaves & Bearings	Lubricate all sheave bearings.	API RP 2D	(✓) YES ( ) NO
	Visually inspect all sheaves and bushings for cracks, wear and deterioration	API RP 2D	(✓) YES ( ) NO As found.....Good.....
	Visually inspect wire rope track of sheave for rope imprints, wear and deterioration. If damage exist sheave should be resurfaced or replaced.	API RP 2D	(✓) YES ( ) NO As found.....Good.....
	Pins retained by snap rings, bolt lock shafts, plates lock should be checked for missing or loose for all	API RP 2D	(✓) YES ( ) NO
	Check wirerope guards and keepers for proper location and condition.	API RP 2D	(✓) YES ( ) NO
	Determine if wire rope is jumping the sheaves, by looking for signs of damage on the sheave brim	Industry Standard	(✓) YES ( ) NO
	Sheave Rope Profile for optimum Rope life the sheave groove profile should be correctly matched to the rope diameter	Industry Standard	(✓) YES ( ) NO
	Check rope sheave should be machine grooved to adepth of not less than 1.5 times the norminal diameter of the rope	Industry Standard	(✓) YES ( ) NO
	MAIN POINT SHEAVES: Note;.....Good.....	Industry Standard	No.1 (✓) YES ( ) NO No.2 (✓) YES ( ) NO
	AUX SHEAVES: Note;.....Good.....	Industry Standard	No.1 (✓) YES ( ) NO
	IDLER SHEAVES: Note;.....Good.....	Industry Standard	AUX (✓) YES ( ) NO Main (✓) YES ( ) NO
	Pins for bronze bushing and straight roller bearing should have a running clearnace of .031 inch/ sheave of end play and should be adjusted accordingly.(count from left)	Industry Standard	(✓) YES ( ) NO
	MAIN POINT SHEAVES:	Industry Standard	Sheave No.1.....0.005..... inch Sheave No.2.....0.005..... inch
	AUX SHEAVES:	Industry Standard	Sheave No.1.....0.030..... inch
	IDLER SHEAVES:	Industry Standard	Sheave AUX.....0.008..... inch. Sheave Main.....0.008..... inch.
	Ensure the sheaves are aligned and the fleet angle is correct **Remark ; Wire rope User's Manual allows 2 degree on grooved winch drum, Smooth Drum shuold be not more than 1-1/2 degree	API RP 2D	(✓) YES ( ) NO
	Determine if wire rope size and sheave sizes/grooves are compatible and record size. Sheave pitch diameter (D) to nominal wire rope diameter (d) ratio (D/d) shall not be less than 18:1	API SPEC 2C	(✓) YES ( ) NO
	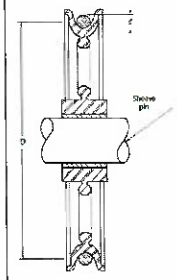 MAIN POINT SHEAVES: — SHEAVE D / WIRE ROPE d = >18	API SPEC 2C	18 inch (D) 3/4 inch (d) 24 (Ratio D/d)
	AUX SHEAVES: — SHEAVE D / WIRE ROPE d = >18	API SPEC 2C	14 inch (D) 3/4 inch (d) 18 (Ratio D/d)
	IDLER SHEAVES: — SHEAVE D / WIRE ROPE d = > 18 (If applicable)	API SPEC 2C	18 inch (D) 3/4 inch (d) 24 (Ratio D/d)
	MAIN BLOCK SHEAVES: — SHEAVE D / WIRE ROPE d = > 16	API SPEC 2C	16 inch (D) 3/4 inch (d) 21 (Ratio D/d)
Load Block	Load Block: Check the load block for cleanliness, binding sheaves, damaged or worn sheaves, worn or distorted sheave pins, broken bolts, and worn cheek weights. Note ;.....	Industry Standard	(✓) YES ( ) NO As found.....Good.....
	Hook: Check the hook damage, excessive wear to the hook safety latch, hook swivel trunnions, thrust collar, securing, damage or missing lubrication fittings, proper lubrication, cracks and gouges, and if visibly bent or twisted or has been exposed to welding or arching. Note ;.....	Industry Standard	(✓) YES ( ) NO As found.....Good.....
	Hook: Tip has been bent more than 10 degree out of plane from the hook body	Industry Standard/API RP2D7	(✓) YES ( ) NO As found.....Good.....
	Inspect the Pins for bronze bushing and straight roller bearing should have a running clearnace of .031 inch/ sheave of end play and should be adjusted accordingly	Industry Standard	(✓) YES ( ) NO
	Inspect Hook or shackle to swivel case clearance is set at .031 to .062 inch, Clearance exceeding .12 to .18 (ONLY CROSBY BRAND)	OEM Crosby	(✓) YES ( ) NO
	OEM STANDARD RECOMMEND that Crane block removal from service untill replaced and repair following below	OEM STANDARD	
	- Elongated center pin and hook trunnion holes exceeding 5% of Original diameter	OEM STANDARD	(✓) YES ( ) NO As found.....Good.....

[redacted] / 24 Feb 25

SYSTEM	TASK		Specification	Record/Reading
	RECORD LOAD BLOCK INFORMATION :	Manufacturer:	OEM Manual	MCKISSICK
		Model:	OEM Manual	MO35D16EH
		Serial Number:	OEM Manual	0364206
	Record Load block measurements and details for future comparison with historical data		Industry Standard	( )YES ( ) NO
	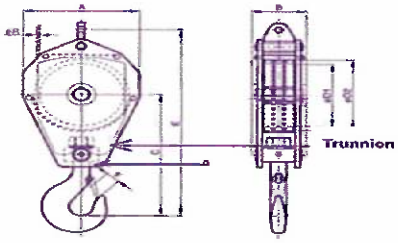	A - Block OD	Industry Standard	19 1/2 mm/ Inch
		B - Block length	Industry Standard	15 1/2 mm/ Inch
		C - Center of Pin to hook Saddle	Industry Standard	34 mm/ Inch
		D1 - Sheave Diameter	Industry Standard	16 mm/ Inch
		E - Block Width	Industry Standard	30 1/2 mm/ Inch
		F - Throat Opening	Industry Standard	7 mm/ Inch
		G - Trunnion	Industry Standard	0.040 mm/ Inch
Auxiliary Ball	Inspect Auxiliary ball for cleanliness, binding swivel, work pad-eye hole. Inspect the hook damage, excessive wear to the hook safety latch, Bent connector plates,Severe corrosion pitting, hook swivel trunnions, thrust collar, securing, damage or missing lubrication fittings,Loose, missing or damaged retaining nuts, cotter pins or swivel set screws ,Missing or illegible rating and warning tags, proper lubrication, cracks and gouges, and if visibly bent or twisted or has been exposed to welding or arching.		Industry Standard	(✓)YES ( ) NO
	Hook: Tip has been bent more than 10 degree out of plane from the hook body		Industry Standard/API RP2D7	(✓)YES ( ) NO
	OEM STANDARD recommend that Crane overhaul ball removal from service untill replaced and repair following below		OEM STANDARD	
	- Elongated ball pin holes, hook latch pin holes and swivel eye exceeding 5% of original diameter,		OEM STANDARD	(✓)YES ( ) NO As found Good
	-Swivel end play gap exceeding .08". Excessive end play indicates damaged internal set screw		OEM STANDARD	(✓)YES ( ) NO As found Good
	-Material loss due to wear exceeding 10% of original section		OEM STANDARD	(✓)YES ( ) NO As found Good
	Throat opening - any distortion causeing an increase in throat opening of 5% not ot exceed 1/4 in. (6 mm.)(or as recommended by the manufacturer)		ASME B30.10	(✓)YES ( ) NO
	All hooks that lift personnel are to have a positive locking safety latch **locking Pin to be used while lifting personnel**		API RP 2D	(✓)YES ( ) NO
	*** Temperature Effected : When hooks are to be used at temperature above 400° F. (204°C) or below -40°F (-40°C), the hook manufacturer or a qualified person should be consulted *** Chemically Active Environment : The strength of hooks can be affected by chemically active environments, such as caustic or acid substances or fumes. The hook manufacturer or qualified person should be consulted before hooks are used in chemically active environment		ASME B30.10	YES
	Verify to ensure nut firmly at which trunion rotate. Identify to set-screw in nut/ swivel/ counter pin and thread condition.		Industry Standard	(✓)YES ( ) NO
	Last NDE inspection record		Industry Standard	Last inspect date_____
	RECORD AUX BALL INFORMATION :	Manufacturer:	OEM Manual	MCKISSICK
		Model:	OEM Manual	MB07T235E
		Serial Number:	OEM Manual	0364251
	Record Auxiliary Ball measurements and details for future comparison with historical data: For Model MB07T200E ONLY		Industry Standard	
	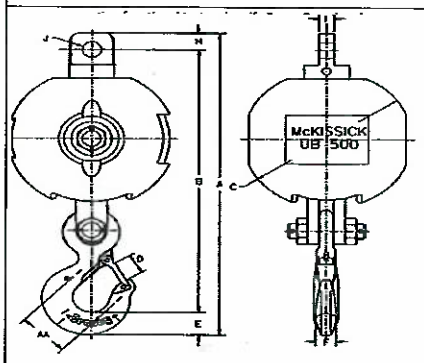	AA Dimensions 3.0 Inch	Industry Standard	3.0 mm/ Inch
		A Dimensions 24.89 Inch	Industry Standard	24.8 mm/ Inch
		B Dimensions 21.71 Inch	Industry Standard	21.7 mm/ Inch
		C Dimensions 12.50 Inch	Industry Standard	12.5 mm/ Inch
		D Dimensions 1.61 Inch	Industry Standard	1.6 mm/ Inch
		E Dimensions 1.81 Inch	Industry Standard	1.8 mm/ Inch
		F Dimensions 1.38 Inch	Industry Standard	1.3 mm/ Inch
		H Dimensions 1.38 Inch	Industry Standard	1.3 mm/ Inch
		I Dimensions 0.88 Inch	Industry Standard	0.8 mm/ Inch
		J Dimensions 1.31 Inch	Industry Standard	1.3 mm/ Inch
Safety system	Check Condition anti - two block , hanging chain ,eye bolts , fix bolts , shackle for missing , corrosion , erosion , deformation		API RP 2D	(✓)YES ( ) NO
	Check anti - two block kick out plate for freely movement		Company Spec/Standard	(✓)YES ( ) NO
	Check anti-2-block device proper function of Main winch		Company Spec/Standard	(✓)Function ( )False
	Check anti-2-block device proper function of Aux. winch		Company Spec/Standard	(✓)Function ( )False
	Check relation of boom radius and boom angle (lowest, middle, highest) with refrence to load chart. Recharge fluid W-15 to load indicator, if required.		API RP 2D	(✓)YES ( ) NO
	Functional test of emergency lowering system (See procedure in Emergency Load Lowering Box). Note: Keep for 1 Yr PM to sustain crane mechanic competency. Caution: Function test must be performed on top deck with max 2-foot height.		Company Spec/Standard	(✓)YES ( ) NO ( )N/A
	Visually check emergency load lowering kit. Ensure EMERGENCY LOWERING PROCEDURE and MATERIAL LIST are in the box. - Ensure ALL items shown on the list are in the box and in good condition - SECURE THE BOX WITH A TIE WRAP.		Company Spec/Standard	(✓)YES ( ) NO ( )N/A
Slew Mechanism	Visually check for damage and excessive wear on gear teeth		OEM Manual	(✓)YES ( ) NO
	Visually check slew gear box in the area of oil seal for any leaks		API RP 2D	(✓)YES ( ) NO
	RECORD SLEW GEAR BOX INFORMATION :	Manufacturer:	OEM Manual	ESK
		Model:	OEM Manual	250A-DICA-51
		Serial Number:	OEM Manual	17CR001
	CHECK and RE-TORQUE swing drive gearbox mounting bolts at following brands: - ESKRIDGE, Model: 250 = 150 FT-LBS		API RP 2D	(✓)Yes ( )No
	Check swing gearbox oil level/condition, top up if required		OEM Manual	(✓)YES ( ) NO

[redacted] / 24 Feb 25

SYSTEM	TASK		Specification	Record/Reading
	Monitor slew gearbox oil condition by visually examine for burnt smell, metal particles, and/or other contaminants, record and change if found.	Meropa 220	OEM Manual	(✓) CHANGE OIL ( ) NOT CHANGE OIL
	Change slew gear box oil		OEM Manual	(✓) CHANGE OIL ( ) NOT CHANGE OIL
	Grease all pivot points of slew ring (bearing)		OEM Manual	(✓) YES ( ) NO
	Grease open gears (pinion)		OEM Manual	(✓) YES ( ) NO
	Rotate crane 360 degree and check smoothness of operation		OEM Manual	(✓) YES ( ) NO
	Check swing drive static parking brake for proper operation Caution: DO NOT stop the swing of the crane with this static brake (parking brake)		OEM Manual	(✓) YES ( ) NO
	Check swing drive dynamic parking brake for proper operation		OEM Manual	(✓) YES ( ) NO
	Check swing lock mechanism condition; corrosion ,dent , loos all part,worn and wear		OEM Manual	(✓) YES ( ) NO As found condition Good
	Check swing lock mechanism freely lock and unlock for function. **Check and inspect for hydraulic for leaks on actuator model.**		OEM Manual	(✓) YES ( ) NO As found condition Good
	Check condition of slew ring bolts e.g. Bolt grade and washers. Caution: Use only hardened flat washers under head of bolt. Do not use lock washers, or regular flat washers.		Industry Standard	( ) YES ( ) NO As found condition Good
	Monitor ball-ring grease sample. If found wear and tear particles, take sample and send to lab. **Wear assessment by grease sample analysis—wear may be monitored by periodic grease sample analysis as describe in this section. Grease samples should be collected every twelve months as a minimum and the results of the analysis recorded; this period should be shortened if obvious metal or contaminants are present.		API PR 2D	( ) SEND TO LAB ( ) NOT SEND TO LAB As found Not Contaminant
	Verify crane condition and load test as separate procedure. **Table 1—Static/Onboard Test Load and Radius** Static/Onboard Rated Load at a Specific Radius lb (kg) / Test Loads in Excess of Static/Onboard Rated Load at a Specific Radius ≤ 40,000 (18,144) / 25 % > 40,000 ≤ 100,000 (>18,144 ≤ 45,356) / 10,000 lb (4536 kg) > 100,000 (45,356) / 10 %		API 2C	(✓) YES ( ) NO Specific test load 6500 lbs.
	Verify crane condition and load test as separate procedure. " Record crane load test in load test form."		Company Standard	(✓) YES ( ) NO

Risk Level Definitions: The following 3 levels indicate the impact the noted deficiency poses to the operation or structural integrity of the equipment:

Level 1 = Incidental	Level #2 = Restricted Operation	Level #3 =Out of Service
Minor deficiency that is recommended to be promptly addressed, but poses no safety and/or environmental risk. The crane can still be operated at full duty.	Deficiency identified that has the potential to limit, de-rate or damage the crane, its surroundings and/or the environment. The duty and locked/ tagged out until the crane's duty and operation should be de-rated or service restricted.	The crane should be removed from duty and locked/ tagged out until the deficiency is rectified.

System:	Risk Level:	Component: / Location:	In Accordance with: / Date Originated:
Description:			
Recommended Action:			
Recommended urgency timeframe for corrective action:		Completed Date:	Completed By:

System:	Risk Level:	Component: / Location:	In Accordance with: / Date Originated:
Description:			
Recommended Action:			
Recommended urgency timeframe for corrective action:		Completed Date:	Completed By:

System:	Risk Level:	Component: / Location:	In Accordance with: / Date Originated:
Description:			
Recommended Action:			
Recommended urgency timeframe for corrective action:		Completed Date:	Completed By:

System:	Risk Level:	Component: / Location:	In Accordance with: / Date Originated:
Description:			
Recommended Action:			
Recommended urgency timeframe for corrective action:		Completed Date:	Completed By:

System:	Risk Level:	Component: / Location:	In Accordance with: / Date Originated:
Description:			
Recommended Action:			

[redacted] / 24 Feb 25.

SYSTEM	TASK			Specification		Record/Reading
Recommended urgency timeframe for corrective action:			Completed Date:		Completed By:	

System:	Risk Level:	Component:		In Accordance with:	
		Location:		Date Originated:	
Description:					
Recommended Action:					
Recommended urgency timeframe for corrective action:			Completed Date:		Completed By:

Done By

[redacted]

23 Feb 2025

THE PEDESTAL CRANE CONDITION VERIFICATION

Date : 23 Feb 2025			
Crane Owner : CTEP/ COTL Field: Benchamas Platform/ Vessel: BNWL			
Crane Owner 's representative : (Mech Supv./ M'Dent) [redacted]			
Qualified Inspector : (Qualified Crane Mechanic)			
Inspector 's company / agency : (Third Party or Outsource to witness if applicable)			
Manufacture Nautilus Fabrication by Oil States Year of Fabrication SEP 2003 Country USA Model / Serial 180B - 80 / 21903 C Standard API Edition FIFTH 1995			Remark
Safe Working Load (SWL) —> OEM	18.16 Metric Tonnes		
Safe Working Load (SWL) —> Existing via MOC, if applicable	— Metric Tonnes		
Boom length, Main	81 Ft		
Boom length, Auxiliary if applicable	— Ft		
Part of line main hoist	4 Part line		
Part of line auxiliary hoist	1 Part line		
Safe Working Load at longest boom radius	80 ft	3.11 Metric Tonnes/ ~~Lbs~~	
Safe Working Load at shortest boom radius	13.55 ft	18.16 Metric Tonnes/ ~~Lbs~~	
The document of crane specification for Testing , Maintenance and Inspection are provided by:	OEM	MOC / Crane Engineer	
Has the crane ever been modified by MOC ? (To verify if this crane is modified with MOC —> Allow to test the crane. If this crane is modifed without MOC —> Not allow to test the crane)	YES	NO	(Employers are not allowed to modify or adjust any part of cranes or dericks or consent to other persons to do these things, that might reduce the safety of the employees who work with the cranes or derricks).
Does the rotating part have proper guard in place?	YES	NO	(Need mitigation plan)
Is the ladder and hand rail in place?	YES	NO	(Need mitigation plan)
Is the maintenance platform in place?	YES	NO	(Need mitigation plan)
Is the SWL tag labelled on crane pedestal, main block or aux ball?	YES	NO	(Need mitigation plan)
Verify if the crane major component damaged or not	YES (Need to repair or mitigate unsafe condition with MOC before testing)	NO	(Employers shall not allow employees work with damaged/ unsafe cranes or derricks)
Inspect boom end connections, for bends, dents, corroded areas, cracked welds, and signs of mechanical damage, wear, etc. **any deviation should be reported** Level 1 = Incidental : Minor deficiency that is recommended to be promptly addressed, but poses no safety and/or environmental risk. The crane can still be operated at full duty. --> Allow to test Level #2 = Restricted Operation: Deficiency identified that has the potential to limit, de-rate or damage the crane, its surroundings and/or the environment. The duty and locked/ tagged out until the crane's duty and operation should be de-rated or service restricted. --> To be derated Level #3 = Out of Service;The crane should be removed from duty and locked/ tagged out until the deficiency is rectified. --> Not Use	YES (To be verified)	NO	
Function Load Testing			
1. Verify Crane SWL (Existing)	3 Metric Tonnes		
2. Verify routine maximum actual load.	2.5 Metric Tonnes		
3. Select the specimen load to be more than actual routine load 1.25 times but not more than SWL. Example # 1 : Crane 's SWL is 18 Metric Tonnes. The routine maximum actual load is 2.4 Metric Tonnes. Therefore, the load testing shall be 2.4 x 1.25 = 3 Metric Tonnes. Example # 2 : Crane 's SWL is 18 Metric Tonnes. The routine maximum actual load is 16 Metric Tonnes. By calculation, the load testing is 16 x 1.25 = 20 Metric Tonnes more than SWL (18 MTon). **Therefore, the load testing shall be 18 Metric Tonnes equal to SWL.**	3 Metric Tonnes		
4. Use Auxiliary Winch if specimen load less than or equal 3 Metric Tonne	YES	NO	
5.Use Main Winch if specimen load more than 3 Metric Tonne	YES	NO	
6. The record of load testing : Fill in "Function Test Record" sheet attached.			

RECORDED FUNCTION TEST PROCEDURE

1. CHECK AND RECORD READING RADIUS AND BOOM INDICATIOR AT FOUR (4) VALUES INCLUDING MAXIMUM AND MINIMUM.

(ALL REDIUS MEASUREMENT ARE TO BE TEKEN FROM THE CENTERLINE OF CRANE ROTATION)

ACTUAL	INDICATED RADIUS (FT)
A) 15' (MINIMUM)	15
B) 20'	20
C) 25'	25
D) 30' (INTERMIDIATE)	30
E) 40'	40
F) 50' (INTERMIDIATE)	50
G) 60'	60
H) 75' (MAXIMUM)	75

2. CHECK AND RECORD READING ON BOOM ANGLE / DEGREES.

SPECIFICATION	INDICATED BOOM ANGLE (DEGREES)
1). MAXIMUM. .....81..... DEGREES	81
2). INTERMEDIATE. .....60..... DEGREES	60
3). INTERMEDIATE. .....40..... DEGREES	40
4). MINIMUM. .....0..... DEGREES	0

3. READING ON LOAD INDICATOR WITHOUT SLINGS OR LOAD / LBS. (LOAD BLOCK + WIRE ROPE)

ACTUAL	INDICATOR READ FREE LOAD, (LBS)
1). MAXIMUM RADIUS 800 LBS.	800
2). MINIMUM RADIUS 950 LBS,	950

4. CHECK AND RECORD ENGINE HIGH IDLE SPEED / RPM.

SPECIFICATION	INDICATED OF FUNCTIONAL (RPM)
1). IDLE SPEED 850 RPM	850
2). LOW SPEED – RPM	–
3). HIGH SPEED 2200 RPM	2200

5. FUNTIONALLY TEST THE FOLLOWING.

ACTUAL	INDICATED OF FUNCTIONAL (TESTED)
A) MAIN HOIST ANTI -TWO BLOCK.	Function
B) AUXILIALY HOIST ANTI -TWO BLOCK.	Function
C) HIGH BOOM ANGLE KICK OUT.	N/A
D) LOW BOOM ANGLE KICK OUT.	N/A
E) PRIME MOVER SHUTDOWN.	Function
F) EMERGENCY SHUTDOWN.	Function
G) ROTATE CRANE 360 LEFT.	Smoot
H) ROTATE CRANE 360 RIGHT.	Smoot.

6. RECORD HYDRAULIC RELIEF VALVE PRESSURE SETTING ON FOLLOWING HYDRAULIC FUNCTION:

SPECIFICATION	INDICATED PRESSURE (PSI)
A) MAIN HOIST .....2575..... PSI.	2575
B) AUXILIALY HOIST .....2800..... PSI.	2800
C) BOOM HOIST .....3000..... PSI.	3000

TEST CONDUCTED BY: [redacted] POSITION :

CRANE OPERATOR : POSITION : CR - Mech

COMMENTS : DATE : 23 Feb 25

De-rate Crane load Chart.

CRANE Mfg.: Nautilus
MODEL: 180B1HD-80 (MS)
SERIAL NUMBER:

LOCATION: MAWH

DATA BASE - PM JOB TASK CARD
WO: 1245374

Crew Size:
Estimated Hours:

SYSTEM	TASK		Specification	Record/Reading
Safety	Perform Job Safety Analysis (JSA)		Company Spec/Standard	✓ YES ( ) NO
	Obtain "COMPANY" PERMIT TO WORK		Company Spec/Standard	✓ YES ( ) NO
	Perform Tool Box Talk		Company Spec/Standard	✓ YES ( ) NO
	BEFORE/AFTER JOB EXECUTION: Ensure to comply with isolation procedure (LOCK OUT/TAG OUT, WARNING SIGNS and BARRIERS).		Company Spec/Standard	✓ YES ( ) NO
Required Tools	Insure proper tools are available at the job site		Company Spec/Standard	✓ YES ( ) NO
	Tool bag		Company Spec/Standard	✓ YES ( ) NO
	Tool box		Company Spec/Standard	✓ YES ( ) NO
	Tool Container		Company Spec/Standard	✓ YES ( ) NO
	MPI equipment and operator		Company Spec/Standard	✓ YES ( ) NO
	Check safety harness Software and Hardware should be good condition before use		Company Spec/Standard	✓ YES ( ) NO
	Check Rescue Equipment ready to use onsite		Company Spec/Standard	✓ YES ( ) NO
	Portable Scaffolding and Crew if require		Company Spec/Standard	✓ YES ( ) NO
Lubricants	Insure proper lubricants and consumables are available at the job site.		Company Spec/Standard	✓ YES ( ) NO
	Hydraulic System - Hydraulic Oil	Rando HD-68	OEM Manual	✓ YES ( ) NO
	Slew Gearbox - Gear Oil	Meropa 220	OEM Manual	✓ YES ( ) NO
	Auxiliary Hoist - Gear Oil	Meropa 220	OEM Manual	✓ YES ( ) NO
	Main Hoist - Gear Oil	Meropa 220	OEM Manual	✓ YES ( ) NO
	Grease Points - Lithium Based **IT MUST NOT INCLUDE MOLYBDENUM DISULPHIDE**	MULTIFAK EP#2	OEM Manual	✓ YES ( ) NO
	Open Gear Teeth - Open Gear Lube highly water resistant and of an adhesive nature.	OMEGA 73	OEM Manual	✓ YES ( ) NO
	Pneumatic Lubricator	SAE Grade 10	OEM Manual	✓ YES ( ) NO
	Wire rope Lubricant Company preferred grade	Birlube 70	OEM Manual	✓ YES ( ) NO
	Engine Oil - SAE Grade 15W-40 (Delo Gold)	15W-40	OEM Manual	✓ YES ( ) NO
	Safe Load Indicator fluid	W-15	OEM Manual	✓ YES ( ) NO
	Engine Radiator - Should have radiator preservatives additives	Cat® SCA	OEM Manual	✓ YES ( ) NO
Consumables	Spray Cold Galvanize		Company Spec/Standard	✓ YES ( ) NO
	Denso Tape		Company Spec/Standard	✓ YES ( ) NO
	WD-40		Company Spec/Standard	✓ YES ( ) NO
History Review	Before starting work, tasks preparation at least 1 day prior to starting work: 1. Review history PM/ CM from Roving Team, 2. Review last PM/ CM/ PMI from Crane Mech, 3. List out all punch list and prepare parts. 4. Review last Certificate task performed		API RP 2D	✓ YES ( ) NO
	Require to update part history from Crane Mech on following main compenents to ensure the right parts are prepared: - Aux/ Main/ Boom Cylinder, Engine, Swing Gearbox, etc. Reference: Crane OEM information of each part need to be recorded - Manufacturer & Contact info - Model & serial number - Installation date		Company Spec/Standard	✓ YES ( ) NO
	Review history data from Certificates and incorporate into current PM: - Pull Test Certificates (ongoing update, 4 yr. history). - Load Test Certificates (ongoing update, 4 yr. history). - Wire Rope Certifications (running rope and standing rope) (life of rope). - Hoist Certifications for hoist classified as "personnel handling" hoist.		API RP 2D	✓ YES ( ) NO
	Review Last Preventative Maintenance Records (Inspection Reports) - Pre-use (Pre-Post Inspection) - 6 Monthly (API RP 2D Not Defined, Company Standard) - 1 Yearly (API RP 2D Defined Annual Inspection)		API RP 2D	✓ YES ( ) NO
Lifting Gear Preparation	Visually Inspect (Sling, sling hooks and shackles) include Websling / Chain		Company Spec/Standard	✓ YES ( ) NO
	Check color code / Tag & date inspection		Company Spec/Standard	( ) YES ( ) NO
General	Determine if access route to-from crane is clean, safe, unobstructed and adequately protected against falls, tripping and slipping		Company Spec/Standard	( ) YES ( ) NO
	Check drain lines and drip pans for deterioration		API RP 2D	✓ YES ( ) NO
	Remove any sediment collected in the bottom of drip pans		Industry Standard	✓ YES ( ) NO
	Check for general crane and components for loss of protective coating and corrosion		Industry Standard	✓ YES ( ) NO
	Check for missing or loose ,corrosion, deformation pins, pin keepers, bolts, nuts, fasteners of all laders, cages and working platform		API RP 2D	✓ YES ( ) NO
	Apply grease to exposed grease parts (control valve spools, ball-ring gear, parking brake valve, etc.)		OEM Manual	✓ YES ( ) NO
Prime Mover	Engine CUMMIN		OEM Manual	✓ YES ( ) NO
	CUMMIN Model : C8.3	S/N.:	OEM Manual	73307766
		AR.No.:	OEM Manual	C83C260-3CP
	Change engine lube oil & oil filter and check the condition of old oil. As found : Not Contaminated		OEM Manual	✓ YES ( ) NO
	Check diesel tank level, top up if required.		OEM Manual	✓ YES ( ) NO
	Check / Clean crankcase breather cap. Change if required		OEM Manual	✓ YES ( ) NO
	Check / Clean air cleaner filter. Replace if require. (Note : Include inspect air cleaner housing)		OEM Manual	✓ YES ( ) NO
	Check condition and inspect of the radiator and cap.		OEM Manual	✓ YES ( ) NO
	Check for any signs of leaks on or around the engine ie; Crankshaft seal for front & rear seal , Engine oil cooler. As found: Good		OEM Manual	✓ YES ( ) NO
	Check condition exhaust system for leaks, corrosion, insulation and general. As found : Good		OEM Manual	✓ YES ( ) NO
	Check condition of all engie hoses and tube. (Fuel supply,Cooling system and Lube oil system. As found: Good		OEM Manual	✓ YES ( ) NO
	Drain water and sediment form diesel tank. As found : There is a little sediment		OEM Manual	✓ YES ( ) NO
	Check / Clean Diesel tank level sightglass and diesel tag.		OEM Manual	✓ YES ( ) NO
	Apply grease of fan bearing/shaft.		OEM Manual	✓ YES ( ) NO
	Check that neither the top nor bottom tensioner arm stop is touching the cast boss on the tensioner body for CUMMINS engine as picture		OEM Manual	✓ YES ( ) NO
	Change water coolant and check condition base of water coolant and record PH.		OEM Manual	✓ YES ( ) NO
	COOLANT PARAMETERS (PH):	6 or higher	OEM Manual	PH = 7
	HOUR METER PARAMETERS:	LAST READING 1223 HRS	OEM Manual	1327 HRS

[redacted] / 19 Jan 25

SYSTEM	TASK			Specification	Record/Reading
	Check and retigthen the bolts of all engine base. / Inspection mouting rubber. As found ; Good			OEM Manual	(✓) YES ( ) NO
	Inspect the engine fan blades that there is a break is it severely distorted or rusted. As found ; Good			OEM Manual	(✓) YES ( ) NO
	Check condition fan blade and guard cover.			OEM Manual	(✓) YES ( ) NO
	Check engine HYD starter drive gear bendix and fly wheel gear teeth condition and record. **Replace if required"			OEM Manual	(✓) YES ( ) NO Bendix Gear: 90 % Fly wheel Gear: 90 %
	Check and inspect condition the Bendix of hydraulic Starter motor.			OEM Manual	(✓) YES ( ) NO
	Lubricate and check engine throttle system.			OEM Manual	(✓) YES ( ) NO
	Determine if the tachometer operates properly: Record Value of Idle & Max Speed (RPMs) Note: Too low Idle (RPMS) will cause excessive worn at winch brake			OEM Manual	
	ENGINE RPM SPECIFIC	IDLE/LOW SPEED	900-1000 RPM	OEM Manual	900 RPM
		MAX SPEED	2200 RPM	OEM Manual	2200 RPM
	Confirm engine oil pressure as per Parameters below and Record Value:			OEM Manual	
	ENGINE OIL PRESSURE SPECIFIC	Minimum	Not lower then 10 PSI	OEM Manual	10 PSI
		Maximum	70 PSI	OEM Manual	70 PSI
	Confirm engine fuel pressure Parameters are correct and Record Value:			OEM Manual	
	ENGINE FUEL PRESSURE SPECIFIC**	Normal	Not lower then 18 PSI	OEM Manual	(✓) YES ( ) NO As found 20 PSI
	Confirm engine temperature Parameters and Record Value:			OEM Manual	
	ENGINE WATER TEMP SPECIFIC	NORMAL	158-195 F	OEM Manual	170 F
	Test engine SAFETY DEVICE- ensure engine kill cable shuts off FUEL supply			API RP 2D	(✓) Function ( ) False
	Test engine SAFETY DEVICE- ensure EMERGENCY KILL CABLE - shuts off AIR supply			API RP 2D	(✓) Function ( ) False
	Test engine SAFETY DEVICE- ensure ENGINE low lube oil - releases OIL PRESSURE to ctivate Alarm Air System ****Note*** Engine oil pressure low alarm at 20 PSI*			Company Spec/Standard	(✓) Function ( ) False
	Test engine SAFETY DEVICE- ensure HIGH TEMP - releases OIL PRESSURE to **activate Alarm Air System**			Company Spec/Standard	(✓) Function ( ) False
	Check and clean up the water separator filter.			OEM Manual	(✓) YES ( ) NO
	Check the general conditionand functioning of turbocharger. Note;			OEM Manual	( ) Leak (✓) Not Leak
	Change fuel filter and inspect the primary hand pump.			OEM Manual	(✓) YES ( ) NO
	Change corrosion resistor(water filter)			OEM Manual	(✓) YES ( ) NO
	Check or adjust the engine valve lash. (Intake vale = 0.012", Exhaust valve =0.022 ")			OEM Manual	(✓) YES ( ) NO ( ) N/A
	Check condition wear of pump drive spline and record ***Note; Remaining 70% of Original Spline Surface must be replace.*			Company Spec/Standard	95 % Remaining
	Check condition wear of adaptor Coulping spline shaft and record ***Note; Remaining 70% of Original adaptor Coulping spline shaft Surface must be replace.*			Company Spec/Standard	90 % Remaining
	Check condition wear of Coulping spline and record. Re-tigthen of all lock bolts. ***Note; Remaining 70% of Original adaptor Coulping spline shaft Surface must be replace.*			Company Spec/Standard	95 % Remaining
Hydraulic Start System (Apply for C2-Remote P/F Only)	**Check pressure system** at the pressure gauge which should reach 3,000 PSI as standard when the system is FULLY charged. Record Value. (As the system cools down, the pressure should drop slightly and finally stabilised.)			OEM Manual	(✓) YES ( ) NO
	Visually inspect all hydraulic connections and hoses for leaks and retighten if necessary. (Caution: This should NOT be done if the system is under pressure.) 1. Slowly release system pressure by loosening the bleed screw on top of the hand pump. 2. Ensure no pressure remains, retighten the suspected leak fitting or replace the damaged hose or component. 3. Retighten the bleed screw on the hand pump. 4. Pump the system up to 2200 - 2600 PSI 5. Inspect that the leak was eliminated.			OEM Manual	(✓) YES ( ) NO
	Function check Accumulator Pre-charge. (Caution: This should NOT be done if the system is under pressure.) 1. Shut the engine off, release system pressure via the bleed screw on top of the hand pump 2. Retighten bleed screw and actuate the hand pump. The pressure will rapidly increase and then stabilised. This pressure is related to accumulator gas pre-charge pressure. 4. If the pressure rapidly increase to 3000 PSI, it indicates that the accumulator has lost its gas charge. 5. Troubleshoot as necessary			OEM Manual	(✓) YES ( ) NO
	Check function rechaging system by function boom down while the engine running. 1. The crane engine is running at 1,000-1500 RPM. 2. Slowly control lever boom function down for charging pressure to accumulator. 3. This pressure should read on prssure gauge between 2200 - 2600 PSI depending on the recharge ratio 80% std. (90% optional). Record Pressure Value.			OEM Manual	2500 PSI
	Check Nitrogen pressure in Accumulator ***Note**spec @ 1,500 psi as follow schematic and if found pressure loss below 1400 PSI then prepare recharge nitrogen in system			OEM Manual	1500 PSI
Pneumatic System	Check for noisy compressor operation, which could indicate a worn drive gear coupling, a loose pulley or excessive internal wear			OEM Manual	(✓) YES ( ) NO
	Check Air Compressor external oil supply and return lines, if applicable, for kinks, bends, or restrictionsto flow			OEM Manual	(✓) YES ( ) NO
	Inspect the Air compressor discharge port, Inlet cavity and discharge line for evidence of restrictions and carboning. (If excessive buildup is noted)			OEM Manual	(✓) YES ( ) NO
	Check all hose connections are sound and all mounting and pivoting connections are secure.			OEM Manual	(✓) YES ( ) NO
	Check condition / Clean and lubricate unloading valve			OEM Manual	(✓) YES ( ) NO
	Check proper air pressure is available for the system. Record Value.			OEM Manual	
	AIR SYSTEM PARAMETERS:		MAX 60 PSI	OEM Manual	60 PSI
	Visually inspection condition of air receiver for signs of corrosion or loose of structural integrity.			Industry Standard	(✓) YES ( ) NO
	Check the hose, piping and tubing for mechanical damage, corrosion, splits, blisters, cracking or excessive abrasion on the outer surface			Industry Standard	(✓) YES ( ) NO
	Drain off air filter and reciever to remove condensed water. If water is present, drain until water is removed.			Industry Standard	(✓) YES ( ) NO
	Check proper operation of pop off valve, by manually functioning valve.			Industry Standard	(✓) YES ( ) NO
	Check proper operation of manual latch valve, by manually functioning latch.			Industry Standard	(✓) YES ( ) NO
	Check proper operation of small engine alarm horn.			Industry Standard	(✓) YES ( ) NO
Hoist / Brakes	Visually check a hoist exhibits erratic operation and/or unusual noise, the hoist must be taken out of service until it is inspected and serviced by a qualified technician. Continued operation of a hoist with a defect in a critical component may lead to loss of load control, property damage, serious injury or death.			OEM Manual	(✓) YES ( ) NO

[redacted] / 19 Jan 25

SYSTEM	TASK			Specification	Record/Reading
	Visual exteriors of hoist, frames, drums and flanges for damage, leaks, cracks and wear and repair/replace as required to maintain the structural integrity of the hoist.			OEM Manual	(✓) YES ( ) NO
	Check all hoist mounting pins, bolts or other fasteners and replace or tighten as necessary.			OEM Manual	(✓) YES ( ) NO
	Lubricant level must be maintained between the minimum and maximum levels; midway up sight glass or at bottom of level plug port as equipped and check/clean plug vent. Use only the recommended type of lubricant.			OEM Manual	(✓) YES ( ) NO
	Inspect Brake Valve Opening Pressure test	Aux / Main		Braden Bulletin 527-Dec,1996	650 / 600 PSI
	Inspect Brake cylinder opening pressure test.	Aux / Main		Industry Standard	400 / 400 PSI
	Measure differancian of static and dynamic brake.	Aux / Main		Industry Standard	250 / 200 PSI
	Check for external oil leaks and repair as necessary. This is extremely important due to the accelerated wear that will result from insufficient lubricating oil in the hoist.			OEM Manual	(✓) YES ( ) NO
	RECORD BOOM CYLINDER INFORMATION :	Boom cylinder Diameter:		OEM Manual	DIA: 12 Inch
		CY Number:		OEM Manual	L=6011-1 R=8108-2
		Serial Number:		OEM Manual	L=3412 R=8109
	RECORD MAIN HOIST INFORMATION :	Manufacturer:		OEM Manual	Braden
		Model:		OEM Manual	CH175A-T2090-02-7
		Serial Number:		OEM Manual	0500466
	Check MAIN HOIST for proper operation and good condition			API RP 2D	(✓) YES ( ) NO
	Brake test & record pressure of MAIN HOIST.			OEM Manual	(✓) YES ( ) NO As found: Good
	Change main hoist gear oil and inspect for small particles in the old oil. ** Refer to Onsite Gear Oil Sample Procedure ** ** Replace and send oil sample to SKL if abnormal ** ** Take photo of Oil Sampling for Reference**			OEM Manual	(✓) YES ( ) NO As found: Good
	RECORD AUXILIARY HOIST INFORMATION :	Manufacturer:		OEM Manual	Braden
		Model:		OEM Manual	PD12C-29864-04-9
		Serial Number:		OEM Manual	0562310
	Check AUXILIARY HOIST for proper operation and good condition			API RP 2D	(✓) YES ( ) NO
	Brake test & record pressure of AUXILIARY HOIST			API RP 2D	(✓) YES ( ) NO
	Change Aux. hoist gear oil and inspect for small particles in the old oil. ** Refer to Onsite Gear Oil Sample Procedure ** ** Replace and send oil sample to SKL if abnormal ** ** Take photo of Oil Sampling for Reference** As found: Good			OEM Manual	( ) SEND SKL LAB (✓) NOT SEND SKL LAB
	Check pressre relief Valve: Determine hoistes' relief valve pressure gauge is working and giving accurate measurement by notice whether pressure gauge is vibrating or not. If not, set relief valve pressure in accordance with the schematic and parameters below. Record all readings.			OEM Manual	(✓) YES ( ) NO
	BOOM RELIEF VALVE TEST	Relief Specific:	3,000 PSI	OEM Manual	3000 PSI
	MAIN HOIST RELIEF VALVE TEST	Relief Specific:	3,250 PSI	OEM Manual	3250 PSI
	AUX HOIST RELIEF VALVE TEST	Relief Specific:	2,950 PSI	OEM Manual	2950 PSI
	SWING RELIEF VALVE TEST	Relief Specific:	1,500 PSI	OEM Manual	1500 PSI
	Measure Pressure of hoist motor case drains and Record Value Reference Bulletin: BRADEN Inspection, Testing, Preventive Maintenance and Speciat Operating Instructions For Planetary Hoists PB-308 latest edition for further details.			OEM Manual	
	MAIN HOIST CASE DRAIN for Gear Motor (Down Mode).	PRESSURE	< 100 psi	Company Spec/Standard	12 PSI
	AUX. HOIST CASE DRAIN for Gear Motor (Down Mode).	PRESSURE	< 100 psi	Company Spec/Standard	10 PSI
Hydraulic System	Check hydraulic tank oil level. Oil should be visible in the sight glass. Top up as required (3/4 Tank Minimum)			OEM Manual	(✓) YES ( ) NO
	Check hydraulic oil condition. (Check if running hours are more than 100 hours from last oil change or during Annual inspection) ** Refer to Onsite Hydraulic Oil Sample Procedure ** ** Replace and send oil sample to SKL if abnormal ** ** Take photo of Oil Sampling for Reference**		Rando HD-68	Company Spec/Standard	( ) SEND SKL LAB (✓) NOT SEND SKL LAB
Hydraulic System	Drain off 1 liter of oil to remove condensed water. If water is present, drain until water is removed and top up with clean oil			Industry Standard	(✓) YES ( ) NO
	Check for any hydraulic leaks			Industry Standard	(✓) YES ( ) NO
	Check the hydraulic hose, piping and tubing for mechanical damage, corrosion, splits, blisters, cracking or excessive abrasion on the outer surface			API RP 2D	(✓) YES ( ) NO
	Check that all hydraulic hose connections are sound and that all mounting and pivoting connections are secure.			Industry Standard	(✓) YES ( ) NO
	Lubricate hydraulic swivel in pedestal and insure tie down restrains are in place and preventing the swivel from rotating with the crane structure.			OEM Manual	(✓) YES ( ) NO
	Ensure the filter breather on tank is not covered or clogged			Industry Standard	(✓) YES ( ) NO
	Visually inspect for missing or loose pins, pin keepers, bolts, nuts, fasteners on all pumps, motors and valves			API RP 2D	(✓) YES ( ) NO
	* Re-tighten the stud bolt of hydraulic main pump and marking the nut for checking to prevent loosening. Note : Torqe spec model P76, P75, PGP/PGM350 ,PGP/PGM330 = 200 ft-lbs. , for model PGP/PGM315 = 140 ft-lbs. and PGP/PGM365 = 450 ft-lbs.			The Commercial Intertech manual	(✓) YES ( ) NO
	Check the filter bypass indicator, while engine is running			OEM Manual	(✓) YES ( ) NO
	With engine running (after all other items pass inspection), check the system for leaks around fittings, hoses, valves and reservoirs			Industry Standard	(✓) YES ( ) NO
	With engine running, check the source of any unusual noise or vibration that may cause or indicate equipment damage or wear			Industry Standard	(✓) YES ( ) NO
	Ensure all hoses are properly rated for the system, see "Parameters" for each system for details.			Industry Standard	(✓) YES ( ) NO
	Record hydraulic oil operating temperture. Note: Hydraulic fluid overheating temperature is over 180 F degrees or 82 C, degrees (reservoir temperature)			Industry Standard	120 Degree F
	Determine if hydraulic return pressure gauge is working and giving accurate measurements. Record readings				
	RECORD HYDRAULIC RETURN PRESSURE PARAMETERS:		60 PSI "maximum"	OEM Manual	20 PSI
	Check and inspect the hydraulic return filters and seals.			OEM Manual	(✓) YES ( ) NO
	Function Testing and record pressures with engine at :		2,200 RPM	API RP 2D	
	BOOM FUNCTION TEST (Need Crane Mech to verify each platform)			OEM Manual	
	UP	Cracking pressure	RECORD	OEM Manual	500 PSI
	Boom Angle : 60 Degree (Recommend or as applicable) UP	Full Speed Pressure	RECORD	OEM Manual	700 PSI

[redacted] / 19 Jan 25

SYSTEM	TASK				Specification	Record/Reading
	Boom Angle : 60 Degree (Recommend or as applicable)	DOWN	Cracking pressure	RECORD	OEM Manual	800 PSI
			Full Speed Pressure	RECORD	OEM Manual	1200 PSI
	MAIN HOIST FUNCTION TEST (Need Crane Mech to verify each platform)				OEM Manual	
	Boom Angle : 60 Degree (Recommend or as applicable)	UP	Cracking pressure	RECORD	OEM Manual	100 PSI
			Full Speed Pressure	RECORD	OEM Manual	500 PSI
		DOWN	Cracking pressure	RECORD	OEM Manual	700 PSI
			Full Speed Pressure	RECORD	OEM Manual	1300 PSI
	AUX HOIST FUNCTION TEST (Need Crane Mech to verify each platform)				OEM Manual	
	Boom Angle : 60 Degree (Recommend or as applicable)	UP	Cracking pressure	RECORD	OEM Manual	100 PSI
			Full Speed Pressure	RECORD	OEM Manual	600 PSI
		DOWN	Cracking pressure	RECORD	OEM Manual	600 PSI
			Full Speed Pressure	RECORD	OEM Manual	1600 PSI
	SWING FUNCTION TEST (Need Crane Mech to verify each platform)				OEM Manual	
	Boom Angle : 60 Degree (Recommend or as applicable)	LEFT	Cracking pressure	RECORD	OEM Manual	200 PSI
			Full Speed Pressure	RECORD	OEM Manual	500 PSI
		RIGHT	Cracking pressure	RECORD	OEM Manual	200 PSI
			Full Speed Pressure	RECORD	OEM Manual	500 PSI
Electrical system, Crane Boom Lighting and red obstruction light	Check the electrical junction boxes, wires and connections for deterioration, desiccant bags, (replace as required)				Industry Standard	(✓) YES ( ) NO
	Check the condition of the grounding and lighting protection system.				Company Spec/Standard	(✓) YES ( ) NO
	Visually inspect boom floodlight and light guards for loose, missing, corroded				Company Spec/Standard	(✓) YES ( ) NO
	Check condition pipe support , U-bolt ,nuts of boom floodlight and Electric slipring for loose , missing , corroded				Company Spec/Standard	(✓) YES ( ) NO
	Check Electric slipring/swivel for 360° continuous rotation				OEM Munnal	(✓) YES ( ) NO
	Check Water ingress, condensation in electric slipring, red obstruction light and boom floodlight				OEM Munnal	(✓) YES ( ) NO
	Check feely movement and lubricate of boom floodlight				OEM Munnal	(✓) YES ( ) NO
	With generator in operation, Intergize all lights to unsure proper function.				API RP 2D	(✓) YES ( ) NO
	Check condition of crane boom lighting and safety net is secured with strong point. * **Safety net should be replace 24 months after installation (2 year)***			Last installation date _____	Company Spec/Standard	(✓) YES ( ) NO
	Check function of crane sound signal				Company Spec/Standard	( ) YES ( ) NO (✓) N/A
	Check function of crane boom lighting at boom upper section				Company Spec/Standard	(✓) YES ( ) NO ( ) N/A
	Check function of crane boom lighting at boom lower section				Company Spec/Standard	(✓) YES ( ) NO ( ) N/A
	Check function of crane boom lighting at winch skid				Company Spec/Standard	(✓) YES ( ) NO ( ) N/A
	Check function of crane boom lighting at crane cabin				Company Spec/Standard	(✓) YES ( ) NO ( ) N/A
	Check function bacon light at boom tip				Company Spec/Standard	(✓) YES ( ) NO ( ) N/A
	Inspection wire rope guide & Roller assembly				Company Spec/Standard	(✓) YES ( ) NO
	Visually inspect red obstruction light pipe support, u-bolts, nuts connection to hand rail for loose, missing, corroded				Company Spec/Standard	(✓) YES ( ) NO
	Visually inspect safety sling attached to the red obsruction light and its base for loose, missing, corroded				Company Spec/Standard	(✓) YES ( ) NO
	Visually inspect red obstruction light function. The light is designed to turn on all the time.				Company Spec/Standard	(✓) YES ( ) NO
Operator Control Station	Check general condition of control panel, bolts, paint security, etc.				API RP 2D	(✓) YES ( ) NO
	Determine if there is a serviceable fire extinguisher in the vicinity of the crane				Company Spec/Standard	(✓) YES ( ) NO
	Determine if correct load chart is in use and easily visible for operator				API RP 2D	(✓) YES ( ) NO
	Determine if charts, indicators and hand signal chart are in the cabling and firmly attached				API RP 2D	(✓) YES ( ) NO
	Determine if angle/radius indicator plate is easily visible to operator and is moving freely.				API RP 2D	(✓) YES ( ) NO
	Check condition of control levers and determine if they "dead-man" back to the neutral position.				API RP 2D	(✓) YES ( ) NO
	Check condition of pressure gauges.				API RP 2D	(✓) YES ( ) NO
	Check proper control labels are firmly installed, completely legible and properly labeled				API RP 2D	(✓) YES ( ) NO
	Check controls for freedom-of-movement				API RP 2D	(✓) YES ( ) NO
	Check condition , Leak, freely moement of Dynamic swing break system *** Note; If HYD Oil loose in CYD reservoir must be refill*				OEM Manual	(✓) YES ( ) NO
	Check condition , Leak, freely moement of Accelerate System *** Note; If HYD Oil loose in CYD reservoir must be refill*				OEM Manual	(✓) YES ( ) NO
	Check all safety glass and rubber seal for proper condition				API RP 2D	(✓) YES ( ) NO ( ) N/A
	Function Test Horn. Note:.....Good.....				Industry Standard	(✓) YES ( ) NO ( ) N/A
	Ensure PRE/POST Check List and Pocket Manual in the cabin. Note;.....OK.....				Company Standard	(✓) YES ( ) NO ( ) N/A
Load Indicator System	Visual check on fittings and connections for leaks. Fix leak if any. Note:.....Good.....				OEM Manual	(✓) YES ( ) NO
	Should any leaks exist, stop leak and recharge system, refer to maintenance manual				OEM Manual	(✓) YES ( ) NO
	Change and flushing Load cell fluid.				OEM Manual	(✓) YES ( ) NO
	Check general condition of tubbing, hoses, pins bolts, paint, etc.				Industry Standard	(✓) YES ( ) NO
	Insure load cell is free of obstructions				OEM Manual	(✓) YES ( ) NO
	Check condition of gauge(s) face and clean glass as required.				OEM Manual	(✓) YES ( ) NO
	Check the scale's operation and weighing accuracy. (Main Hoist) Remark : Maximum variance +/- 2% Note:.....Good.....				Company Spec/Standard	(✓) YES ( ) NO ( ) N/A
	Check the scale's operation and weighing accuracy. (Aux. Hoist) Remark : Maximum variance +/- 2% Note:.....Good.....				Company Spec/Standard	(✓) YES ( ) NO ( ) N/A
	Check the internal casting fluid of weight indicator. top up if required				Industry Standard	(✓) YES ( ) NO ( ) N/A
	Insure SWL tag matches ratings on the Crane Load Chart.				OEM Manual	(✓) YES ( ) NO ( ) N/A
	Insure Boom Length, matches the Crane Load Chart				OEM Manual	(✓) YES ( ) NO ( ) N/A
	Insure Boom Angle measurements and readings match the boom angle indicator.				OEM Manual	(✓) YES ( ) NO ( ) N/A
	Insure Boom Radius measurements indicate the distance from center line of the crane to the hook				OEM Manual	(✓) YES ( ) NO ( ) N/A
	Check Main load cell gap 1/4 (0.250) inch				OEM Manual	(✓) YES ( ) NO ( ) N/A

[redacted] / 19 Jan 25

SYSTEM	TASK		Specification	Record/Reading
	Check Aux load cell gap 3/8(0.380) inch (Compression Load Cell Type)		OEM Manual	(✓)YES ( ) NO ( )N/A
Pedestal & Structure	Visually check **Pedestal** for chipped/cracked paint, deformation, worn parts, dents, corroded areas, cracks weld, etc.		API RP 2D	(✓)YES ( ) NO
	Check water rain drain at pedestal must be not obstuct		Industry Standard	(✓)YES ( ) NO
	Check pin and cotter pin of pedestal missing , corrosion, wear, damage and exercise pin.		Industry Standard	(✓)YES ( ) NO
	Visually check **Base - Plate connection and Base hoist Structure** for chipped/cracked paint, deformation, worn parts, dents, corroded areas, cracks weld, etc.		API RP 2D	(✓)YES ( ) NO
	Check A fixed such as Handrial, Walkway, Grating, stationary structure without significant movement in response to waves and currents in normal operating conditions.		API RP 2C	(✓)YES ( ) NO
	Visually check and lubricate maintenance jib. ***Note*** If on pedestal crane		OEM Manual	( )YES ( ) NO ( )N/A
	Check maintenance jib is secure firmly. ***Note*** If on pedestal crane		OEM Manual	(✓)YES ( ) NO ( )N/A
Box Boom & Luffing CYD	Check and Verify entire box boom and Boom CYD for loss of protective coating and corrosion. Note;.....Good.....		API RP 2D	(✓)YES ( ) NO
	Check and Verify entire box boom and Boom CYD for chipped/cracked paint, deformation, worn parts, dents, corroded areas, cracks, etc. Note;.....Good.....		API RP 2D	(✓)YES ( ) NO
	Check and Verify boom end connections, for bends, dents, corroded areas, cracked welds, and signs of mechanical damage, wear, etc. **any deviation should be reported**		API RP 2D	( )YES (✓) NO
	Check and Verify boom rest and wooden support to ensure it's in good condition		API RP 2D	( )YES (✓) NO
	Inspect pin and pin holes of Upper tank and Lower tank for excessive clearance		OEM Manual	( )YES (✓) NO
	BOOM CYLINDER PIN MAXIMUM TOLERANCE	0.125 Inch (3mm)	Industry Standard	As found.....Ok Standard
	Check BOOM CYLINDERS for proper operation and good condition		API RP 2D	(✓)YES ( ) NO
	Check Boom cylinder barrels and rods for leaks, mechanical damage and corrosion		Industry Standard	(✓)YES ( ) NO
	Check and measurement boom foot pin and connection pins for clearance		Industry Standard	(✓)YES ( ) NO
	BOOM FOOT PINS & BOOM BOX CONNECTER PIN TOLERANCE	0.125 Inch (3mm)	Industry Standard	
	Boom Foot Pin Tolerance		Industry Standard	0.010 inch
	Boom Box Connecter Pin Tolerance		Industry Standard	0.013 inch
	Check connecting bolts of box boom loose, corrosion, wear, damage		OEM Manual	(✓)YES ( ) NO
	Lubricate boom foot pins and bushings		OEM Manual	(✓)YES ( ) NO
	Lubricate boom cylinder pins, bearings and bushings		OEM Manual	(✓)YES ( ) NO
	Boom function test angle/radius to correction **Note; The cylinder(s) mechanism shall be capable of elevating the boom from a minimum of zero degrees to the maximum recommended boom angle.		API RP 2C	(✓)YES ( ) NO
	Operation functional test and verify Boom Creeping down **Note ; Test at angle 60 °		Industry Standard	(✓)YES ( ) NO As found.....Good.....
Wire Rope	Determine if parts-of-line match parts of line on the load chart in the crane cabin.		API RP 2D	(✓)YES ( ) NO
	Determine if visible portion of wire rope adequately lubricated. If not lubricate wire rope		API RP 2D	(✓)YES ( ) NO
	For each layer of wire rope on drum, check that all rope is parallel and each crossover point at hoist flanges is correct		API RP 2D	(✓)YES ( ) NO
	The top layer of rope must not be lower to the flange tips 2.5 in for Smooth drum,2 in for groove drum or 2.5 times of wire rope diameter		API RP 2C	(✓)YES ( ) NO
	Inspect wire rope for, kinking, crushing, broken wires, necking down of rope diameter, worn outside wires, corroded or broken wires at end connection, cutting or unstringing		API RP 2D	(✓)YES ( ) NO As found.....Good.....
	NoteRunning Ropes of rotation-resistant construction used in the main or auxiliary Hoist: - Four (4) Randomly distributed broken wires within 30 rope diameter - Two (2) broken wires in one stand within 6 rope diameter		API RP2D Edition 7	(✓)YES ( ) NO As found.....Good.....
	One valley break can indicate internal rope damage requiring close inspection of this section of the rope. When one or more valley breaks are found in one lay length the rope should be retired.		API RP2D Edition 7	(✓)YES ( ) NO As found.....Good.....
	Reductions for the rope diameter, from initial wire rope dimensional measurements, in a nonworking area (an area away from the sheaves) compared to the lowest diameter of rope measured in three working areas (areas where the rope regularly goes over a sheave) of more than the following is observed: — 3/64 in. (0.047 in.) (1.2 mm) for diameters up to and including 3/4 in. (19.1 mm); — 1/16 in. (0.062 in.) (1.6 mm) for diameters of 7/8 in. to 1-1/8 in. (22.2 mm to 28.6 mm); — 3/32 in. (0.093 in.) (0.8 mm) for diameter of 1-1/4 in. to 1-1/2 in. (31.8 mm to 38.1 mm); — For rope diameters greater than 1-1/2 in., a 5 % diameter loss from baseline measurement. — Wear of one-third the original diameter of the outside individual wires.		API RP2D Edition 7	( )YES (✓) NO As found dimension.....Good.....
	Increase in the length of an individual rope lay is observed. This increase in lay length and accompanying reduction in diameter can be caused by failure of the core. This can occur more readily in ropes or rotation-resistant construction.		API RP2D Edition 7	(✓)YES ( ) NO As found.....Ok.....
	-Inspection and Verify running and standing rope from heat effect **Note; Not more than 250°C -There is evidence of heat damage from any source (i.e. engine exhaust, flare towers, stress corrosion cracking, etc.). Heat can be generated by passing a rope over a frozen or non-turning sheave, contact with structural members of the crane, improperly grounded welding leads or lightning strikes		Industry Standard	(✓)YES ( ) NO As found.....OK.....
	With the boom at the highest possible angle and the main load block or overhaul ball at the water level, ensure there is a minimum of 5 wraps of wire-rope remaining on the drums. Note: (Thai law, requires minimum of 2 wraps)		API SPEC 2C / Thai Law	(✓)YES ( ) NO
	Reference: - Running rope safety factor not less than 6 for wire rope that are running wire, (Thai law; Wire rope nominal breaking strength x number parts of line / Design factor 6) - Standing rope safety factor not less than 3.5 for wire rope that are stay cables, (Thai law)		Thai Law	(✓)YES ( ) NO ( )N/A
	Measure and record nominal diameter of "running ropes"main and auxiliary (particularly on drum, equalizer sheave and at sockets, clips and dead end points) *****Nominal = several measurements added together divided by Number of measurements*****		API RP 2D	(✓)YES ( ) NO
	Inspect wire rope and record dimension.		API RP 2D	
	MAIN WIRE ROPE OD:	FULL DRUM	OEM Manual	0.655 inch
		HALF DRUM	OEM Manual	0.650 inch
		WATER LEVEL	OEM Manual	0.650 inch
	AUX WIRE ROPE OD:	FULL DRUM	OEM Manual	0.645 inch
		HALF DRUM	OEM Manual	0.648 inch
		WATER LEVEL	OEM Manual	0.650 inch

[redacted] / 19 Jan 25

SYSTEM	TASK	Specification	Record/Reading
	Slip-Cut 1 meter of all ropes at the wedge socket and re-wedge to prevent rust inside of wedge socket (at outward end of rope, not on hoist drum) Dead end tail length is never less than 6 inches, or: - Standard 6 to 8 Strand wire rope is not less than 7 times the rope diameter - Rotation Resistant Wire Rope is not less than 20 times the rope diameter	Company Spec/Standard	(✓) YES ( ) NO
	U-bolt and Fist Grip Clips: Extreme care should be exercised to assure proper orientation of U-bolt clips. The U-bolt segment shall be in contact with the wire rope dead-end. The orientation, spacing, torquing, and number of all clips shall be in accordance with the crane manufacture's specifications.	API SPEC 2C	(✓) YES ( ) NO
	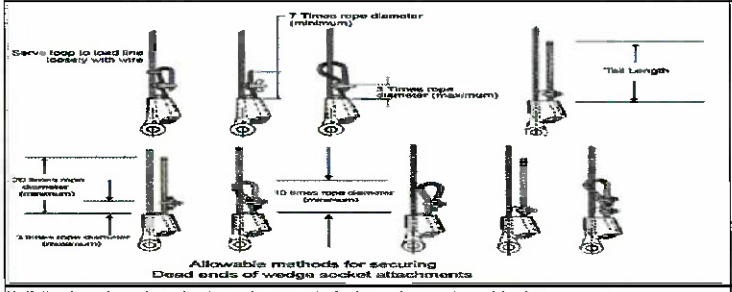 Allowable methods for securing Dead ends of wedge socket attachments	API SPEC 2C	Model ans Size wedge socket. Main hoist. Model..... Size.....5/8..... Aux.Hoist. Model..... Size.....5/8.....
	Verify that the wedge socket and wedge are the correct size for the rope in use and record the size	API SPEC 2C	(✓) YES ( ) NO
Sheaves & Bearings	Lubricate all sheave bearings.	API RP 2D	(✓) YES ( ) NO
	Visually inspect all sheaves and bushings for cracks, wear and deterioration	API RP 2D	(✓) YES ( ) NO As found.....Good.....
	Visually inspect wire rope track of sheave for rope imprints, wear and deterioration. If damage exist sheave should be resurfaced or replaced.	API RP 2D	(✓) YES ( ) NO As found.....Good.....
	Pins retained by snap rings, bolt lock shafts, plates lock should be checked for missing or loose for all	API RP 2D	(✓) YES ( ) NO
	Check wirerope guards and keepers for proper location and condition.	API RP 2D	(✓) YES ( ) NO
	Determine if wire rope is jumping the sheaves, by looking for signs of damage on the sheave brim	Industry Standard	(✓) YES ( ) NO
	Sheave Rope Profile for optimum Rope life the sheave groove profile should be correctly matched to the rope diameter	Industry Standard	(✓) YES ( ) NO
	Check rope sheave should be machine grooved to adepth of not less than 1.5 times the norminal diameter of the rope	Industry Standard	(✓) YES ( ) NO
	MAIN POINT SHEAVES: Note;.....Good.....	Industry Standard	No.1 (✓) YES ( ) NO No.2 (✓) YES ( ) NO
	AUX SHEAVES: Note;.....Good.....	Industry Standard	No.1 (✓) YES ( ) NO
	IDLER SHEAVES: Note;.....Good.....	Industry Standard	AUX ( ) YES ( ) NO Main (✓) YES ( ) NO
	Pins for bronze bushing and straight roller bearing should have a running clearnace of .031 inch/ sheave of end play and should be adjusted accordingly.(count from left)	Industry Standard	(✓) YES ( ) NO
	MAIN POINT SHEAVES:	Industry Standard	Sheave No.1...0.012.... Inch Sheave No.2...0..0.11.... Inch
	AUX SHEAVES:	Industry Standard	Sheave No.1...0.018.... Inch
	IDLER SHEAVES:	Industry Standard	Sheave AUX...0..003.... inch. Sheave Main...0..00.8.... Inch.
	Ensure the sheaves are aligned and the fleet angle is correct **Remark ; Wire rope User's Manual allows 2 degree on grooved winch drum, Smooth Drum shuold be not more than 1-1/2 degree	API RP 2D	(✓) YES ( ) NO
	Determine if wire rope size and sheave sizes/grooves are compatible and record size. Sheave pitch diameter (D) to nominal wire rope diameter (d) ratio (D/d) shall not be less than 18:1	API SPEC 2C	(✓) YES ( ) NO
	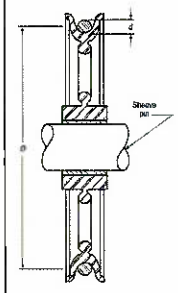 MAIN POINT SHEAVES: — SHEAVE D / WIRE ROPE d = >18	API SPEC 2C	18 inch (D) 5/8 inch (d) 2.8 (Ratio D/d)
	AUX SHEAVES: — SHEAVE D / WIRE ROPE d = >18	API SPEC 2C	14 inch (D) 5/8 inch (d) 22 (Ratio D/d)
	IDLER SHEAVES: — SHEAVE D / WIRE ROPE d = > 18 (If applicable)	API SPEC 2C	18 inch (D) 5/8 inch (d) 28 (Ratio D/d)
	MAIN BLOCK SHEAVES: — SHEAVE D / WIRE ROPE d = > 16	API SPEC 2C	14 inch (D) 5/8 inch (d) 22 (Ratio D/d)
Load Block	Load Block; Check the load block for cleanliness, binding sheaves, damaged or worn sheaves, worn or distorted sheave pins, broken bolts, and worn cheek weights. Note ;.....	Industry Standard	(✓) YES ( ) NO As found.....Good.....
	Hook: Check the hook damage, excessive wear to the hook safety latch, hook swivel trunnions, thrust collar, securing, damage or missing lubrication fittings, proper lubrication, cracks and gouges, and if visibly bent or twisted or has been exposed to welding or arching. Note ;.....	Industry Standard	( ) YES ( ) NO As found.....Good.....

[redacted] / 19 Jan 24

SYSTEM	TASK	Specification	Recorp/Reading
	Hook: Tip has been bent more than 10 degree out of plane from the hook body	Industry Standard/API RP2D7	✓ YES ( ) NO As found Good
	Inspect the Pins for bronze bushing and straight roller bearing should have a running clearnace of .031 inch/ sheave of end play and should be adjusted accordingly	Industry Standard	✓ YES ( ) NO
	Inspect Hook or shackle to swivel case clearance is set at .031 to .062 inch, Clearance exceeding .12 to .18 (ONLY CROSBY BRAND)	OEM Crosby	✓ YES ( ) NO
	OEM STANDARD RECOMMEND that Crane block removal from service untill replaced and repair following below	**OEM STANDARD**	
	- Elongated center pin and hook trunnion holes exceeding 5% of Original diameter	**OEM STANDARD**	✓ YES ( ) NO As found On Standard
	-Material loss due to wear exceeding 10% of original section	**OEM STANDARD**	✓ YES ( ) NO As found On Standard
	-Sheave wire rop groove diameter smaller than 2.5%	**OEM STANDARD**	✓ YES ( ) NO As found On Standard
	Loosened tie bolts nuts, center pin round nuts, check weight cap screws and hook nut cap screws. Tie bolt nuts to be torqued to 35-40 ft.Lbs and restaked, all other fasteners wrench tight	**OEM STANDARD**	✓ YES ( ) NO
	Throat opening - any distortion causeing an increase in throat opening of 5% not ot exceed 1/4 in. (6 mm.)(or as recommended by the manufacturer)	**ASME B30.10**	✓ YES ( ) NO
	Inspect rope track worn in sheave groove, sheave must be resurface or replace	API RP 2D	✓ YES ( ) NO
	Ensure the load block is not using "Cast Iron" check weights they can not be used as per API	API SPEC 2C	✓ YES ( ) NO As found OK
	Determine if all hooks are equipped with properly operating safety latches and check for proper functioning	API RP 2D	✓ YES ( ) NO
	Lubricate sheave bearings and swivels	OEM Manual	✓ YES ( ) NO
	Re-thighten nut firmly to point at which trunion will just rotate, the Re-tighten set-screw in nut and thread condition as in the picture below.	Industry Standard	✓ YES ( ) NO
	Last NDE inspection record	Industry Standard	Last Inspect date Jan 23
	RECORD LOAD BLOCK INFORMATION : — Manufacturer:	OEM Manual	MCKISSICK
	Model:	OEM Manual	M30D14 H
	Serial Number:	OEM Manual	41234653
	Record Load block measurements and details for future comparison with historical data ☑	Industry Standard	✓ YES ( ) NO
	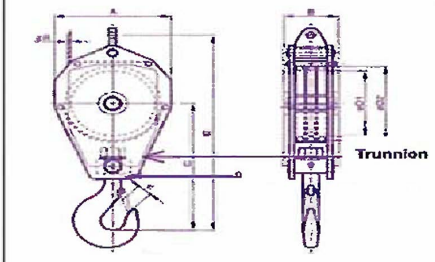 — A - Block OD	Industry Standard	17.5 mm/ inch
	B - Block length	Industry Standard	13.5 mm/ inch
	C - Center of Pin to hook Saddle	Industry Standard	7.8 mm/ inch
	D1 - Sheave Diameter	Industry Standard	14 mm/ inch
	E - Block Width	Industry Standard	34 mm/ inch
	F - Throat Opening	Industry Standard	7 mm/ inch
	G - Trunnion	Industry Standard	0.015 mm/ inch
Aux. Ball	**Inspect Auxiliary ball for cleanliness, binding swivel, work pad-eye hole. Inspect the hook damage, excessive wear to the hook safety latch, Bent connector plates,Severe corrosion pitting, hook swivel trunnions, thrust collar, securing, damage or missing lubrication fittings,Loose, missing or damaged retaining nuts, cotter pins or swivel set screws ,Missing or illegible rating and warning tags, proper lubrication, cracks and gouges, and if visibly bent or twisted or has been exposed to welding or arching.**	Industry Standard	✓ YES ( ) NO
	Hook: Tip has been bent more than 10 degree out of plane from the hook body	Industry Standard/API RP2D7	✓ YES ( ) NO
	OEM STANDARD recommend that Crane overhaul ball removal from service untill replaced and repair following below	**OEM STANDARD**	
	- Elongated ball pin holes, hook latch pin holes and swivel eye exceeding 5% of original diameter,	**OEM STANDARD**	✓ YES ( ) NO As found On Standard
	-Swivel end play gap exceeding .08". Excessive end play indicates damaged internal set screw	**OEM STANDARD**	✓ YES ( ) NO As found On Standard
	-Material loss due to wear exceeding 10% of original section	**OEM STANDARD**	✓ YES ( ) NO As found On Standard
	Throat opening - any distortion causeing an increase in throat opening of 5% not ot exceed 1/4 in. (6 mm.)(or as recommended by the manufacturer)	**ASME B30.10**	✓ YES ( ) NO
	All hooks that lift personnel are to have a positive locking safety latch **locking Pin to be used while lifting personnel**	API RP 2D	✓ YES ( ) NO
	*** Temperature Effected : When hooks are to be used at temperature above 400° F. (204°C) or below -40°F (-40°C), the hook manufacturer or a qualified person should be consulted *** Chemically Active Environment : The strength of hooks can be affected by chemically active environments, such as caustic or acid substances or fumes. The hook manufacturer or qualified person should be consulted before hooks are used in chemically active environment	**ASME B30.10**	
	Verify to ensure nut firmly at which trunion rotate. Identify to set-screw in nut/ swivel/ counter pin and thread condition.	Industry Standard	✓ YES ( ) NO
	Last NDE inspection record	Industry Standard	Last Inspect date Jan 23
	RECORD AUX BALL INFORMATION : — Manufacturer:	OEM Manual	MCKISSICK
	Model:	OEM Manual	MB07T200E
	Serial Number:	OEM Manual	41245935
	Record Auxiliary Ball measurements and details for future comparison with historical data: For Model MB07T200E ONLY	Industry Standard	
	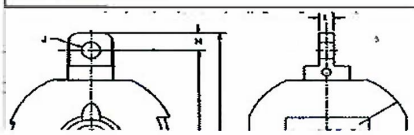 — AA Dimensions 3.0 Inch	Industry Standard	3.0 mm/ inch
	A Dimensions 24.89 Inch	Industry Standard	24.8 mm/ inch
	B Dimensions 21.71 Inch	Industry Standard	21.7 mm/ inch

[redacted] / 19 Jan 23

SYSTEM	TASK		Specification	Record/Reading
	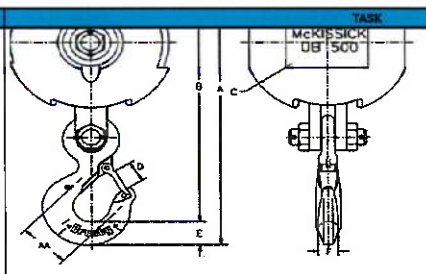	C Dimensions 12.50 Inch	Industry Standard	12.5 mm/ inch
		D Dimensions 1.61 Inch	Industry Standard	1.6 mm/ inch
		E Dimensions 1.81 Inch	Industry Standard	1.8 mm/ inch
		F Dimensions 1.38 Inch	Industry Standard	1.3 mm/ inch
		H Dimensions 1.38 Inch	Industry Standard	1.3 mm/ inch
		I Dimensions 0.88 Inch	Industry Standard	0.8 mm/ inch
		J Dimensions 1.31 Inch	Industry Standard	1.3 mm/ inch
	Record Auxiliary Ball measurements and details for future comparison with historical data: For Model OB 7EE 200-4		Industry Standard	
	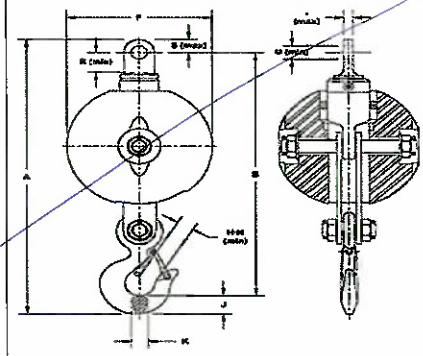	A Dimensions 27.25 Inch	Industry Standard	____ mm/ inch
		B Dimensions 24.10 Inch	Industry Standard	____ mm/ inch
		F Dimensions 12.00 Inch	Industry Standard	____ mm/ inch
		H-H Dimensions 1.88 Inch	Industry Standard	____ mm/ inch
		J Dimensions 1.81 Inch	Industry Standard	____ mm/ inch
		K Dimensions 1.46 Inch	Industry Standard	____ mm/ inch
		R Dimensions 1.55 Inch	Industry Standard	____ mm/ inch
		S Dimensions 1.34 Inch	Industry Standard	____ mm/ inch
		T Dimensions 1.03 Inch	Industry Standard	____ mm/ inch
		U Dimensions 1.31 Inch	Industry Standard	____ mm/ inch
Safety system	Check Condition anti - two block , hanging chain ,eye bolts , fix bolts , shackle for missing , corrosion , erosion , deformation		API RP 2D	( )YES ( ) NO
	Check anti - two block kick out plate for freely movement		Company Spec/Standard	( )YES ( ) NO
	Check anti-2-block device proper function of Main winch		Company Spec/Standard	( )Function ( ) False
	Check anti-2-block device proper function of Aux. winch		Company Spec/Standard	( )Function ( ) False
	Check relation of boom radius and boom angle (lowest, middle, highest) with refrence to load chart. Recharge fluid W-15 to load indicator, if required.		API RP 2D	( )YES ( ) NO
	Functional test of emergency lowering system (See procedure in Emergency Load Lowering Box). **Note:** Keep for 1 Yr PM to sustain crane mechanic competency. **Caution:** Function test must be performed on top deck with max 2-foot height.		Company Spec/Standard	( )YES ( ) NO ( ) N/A
	Visually check emergency load lowering kit. Ensure EMERGENCY LOWERING PROCEDURE and MATERIAL LIST are in the box. - Ensure ALL items shown on the list are in the box and in good condition - **SECURE THE BOX WITH A TIE WRAP.**		Company Spec/Standard	( )YES ( ) NO ( ) N/A
Slew Mechanism	Visually check for damage and excessive wear on gear teeth		OEM Manual	( )YES ( ) NO
	Visually check slew gear box in the area of oil seal for any leaks		API RP 2D	( )YES ( ) NO
	RECORD SLEW GEAR BOX INFORMATION :	Manufacturer:	OEM Manual	FSK
		Model:	OEM Manual	250A-01C4-51
		Serial Number:	OEM Manual	OSIT 2024-006
	CHECK and RE-TORQUE swing drive gearbox mounting bolts at following brands: - ESKRIDGE, Model: 250 = 150 FT-LBS		API RP 2D	( )Yes ( ) No
	Check swing gearbox oil level/condition, top up if required	Meropa 220	OEM Manual	( )YES ( ) NO
	Monitor slew gearbox oil condition by visualy examine for burnt smell, metal particles, and/or other contaminants, record and change if found.		OEM Manual	( ) CHANGE OIL ( ) NOT CHANGE OIL
	Change slew gear box oil		OEM Manual	( ) CHANGE OIL ( ) NOT CHANGE OIL
	Grease all pivot points of slew ring (bearing)		OEM Manual	( )YES ( ) NO
	Grease open gears (pinion)		OEM Manual	( )YES ( ) NO
	Rotate crane 360 degree and check smoothness of operation		OEM Manual	( )YES ( ) NO
	Check swing drive static parking brake for proper operation Caution: **DO NOT stop the swing of the crane with this static brake (parking brake)**		OEM Manual	( )YES ( ) NO
	Check swing drive dynamic parking brake for proper operation		OEM Manual	( )YES ( ) NO
	Check swing lock mechanism condition; corrosion ,dent , loos all part,worn and wear		OEM Manual	( )YES ( ) NO As found condition Good
	Check swing lock mechanism freely lock and unlock for function. **Check and inspect for hydraulic for leaks on actuator model.**		OEM Manual	( )YES ( ) NO As found condition Good
	Check condition of slew ring bolts e.g. Bolt grade and washers. **Caution:** Use only hardened flat washers under head of bolt. Do not use lock washers, or regular flat washers.		Industry Standard	( )YES ( ) NO As found condition Good
	Monitor ball-ring grease sample. If found wear and tear particles, take sample and send to lab. **Wear assessment by grease sample analysis—wear may be monitored by periodic grease sample analysis as describe in this section. Grease samples should be collected every twelve months as a minimum and the results of the analysis recorded; this period should be shortened if obvious metal or contaminants are present.		API PR 2D	( ) SEND TO LAB ( ) NOT SEND TO LAB As found Normal

[redacted] / 19 Jan 25.

SYSTEM	TASK	Specification	Record/Reading
	Verify crane condition and load test as separate procedure.	API2C	(✓) YES ( ) NO Specific test load 5290 lbs.
	Verify crane condition and load test as separate procedure. "Record crane load test in load test form."	Company Standard	(✓) YES ( ) NO

Table 1—Static/Onboard Test Load and Radius

Static/Onboard Rated Load at a Specific Radius lb (kg)	Test Loads in Excess of Static/Onboard Rated Load at a Specific Radius
≤ 40,000 (18,144)	25 %
> 40,000 ≤ 100,000 (>18,144 ≤ 45,356)	10,000 lb (4536 kg)
> 100,000 (45,356)	10 %

Risk Level Definitions: The following 3 levels indicate the impact the noted deficiency poses to the operation or structural integrity of the equipment:

Level 1 = Incidental	Level #2 = Restricted Operation	Level #3 =Out of Service
Minor deficiency that is recommended to be promptly addressed, but poses no safety and/or environmental risk. The crane can still be operated at full duty.	Deficiency identified that has the potential to limit, de-rate or damage the crane, its surroundings and/or the environment. The duty and locked/ tagged out until the crane's duty and operation should be de-rated or service restricted.	The crane should be removed from duty and locked/ tagged out until the deficiency is rectified.

System:	Risk Level:	Component: / Location:	In Accordance with: / Date Originated:
Description:	Pressure gauge Air 100 Psi		
Recommended Action:			
Recommended urgency timeframe for corrective action:	Next Plan.	Completed Date:	Completed By:

System:	Risk Level:	Component: / Location:	In Accordance with: / Date Originated:
Description:	Cylinder swing Lock 1 Ea.		
Recommended Action:			
Recommended urgency timeframe for corrective action:	Next Plan.	Completed Date:	Completed By:

System:	Risk Level:	Component: / Location:	In Accordance with: / Date Originated:
Description:			
Recommended Action:			
Recommended urgency timeframe for corrective action:		Completed Date:	Completed By:

System:	Risk Level:	Component: / Location:	In Accordance with: / Date Originated:
Description:			
Recommended Action:			
Recommended urgency timeframe for corrective action:		Completed Date:	Completed By:

System:	Risk Level:	Component: / Location:	In Accordance with: / Date Originated:
Description:			
Recommended Action:			
Recommended urgency timeframe for corrective action:		Completed Date:	Completed By:

System:	Risk Level:	Component: / Location:	In Accordance with: / Date Originated:
Description:			
Recommended Action:			
Recommended urgency timeframe for corrective action:		Completed Date:	Completed By:

Completed By [redacted]

18 Jan 25

THE PEDESTAL CRANE CONDITION VERIFICATION

Date : 13 Jan 24			
Crane Owner : CTEP/ COTL Field: Benkumas Platform/ Vessel: MAWH			
Crane Owner 's representative : (Mech Supv./ M'Dent) [redacted]			
Qualified inspector : (Qualified Crane Mechanic)			
Inspector 's company / agency : (Third Party or Outsource to witness if applicable)			
Manufacture Nautilus Fabrication by Oil State Year of Fabrication June 202 Country USA Model / Serial 80B2(HD)-30MS / 24011 C Standard API Edition Sixth edition 2004			Remark
Safe Working Load (SWL) ---> OEM	15.46 Metric Tonnes		
Safe Working Load (SWL) —> Existing via MOC, if applicable	— Metric Tonnes		
Boom length, Main	80 Ft		
Boom length, Auxiliary if applicable	— Ft		
Part of line main hoist	4 Part line		
Part of line auxiliary hoist	1 Part line		
Safe Working Load at longest boom radius	80 ft	3.30 Metric Tonnes/ Lbs	
Safe Working Load at shortest boom radius	13 ft	15.46 Metric Tonnes/ Lbs	
The document of crane specification for Testing , Maintenance and Inspection are provided by:	OEM	MOC / Crane Engineer	
Has the crane ever been modified by MOC ? (To verify if this crane is modified with MOC –> Allow to test the crane. If this crane is modifed without MOC –> Not allow to test the crane)	YES	NO	(Employers are not allowed to modify or adjust any part of cranes or dericks or consent to other persons to do these things, that might reduce the safety of the employees who work with the cranes or derricks).
Does the rotating part have proper guard in place?	YES	NO	(Need mitigation plan)
Is the ladder and hand rail in place?	YES	NO	(Need mitigation plan)
Is the maintenance platform in place?	YES	NO	(Need mitigation plan)
Is the SWL tag labelled on crane pedestal, main block or aux ball?	YES	NO	(Need mitigation plan)
Verify if the crane major component damaged or not	YES (Need to repair or mitigate unsafe condition with MOC before testing)	NO	(Employers shall not allow employees work with damaged/ unsafe cranes or derricks)
Inspect boom end connections, for bends, dents, corroded areas, cracked welds, and signs of mechanical damage, wear, etc. **any deviation should be reported** Level 1 = Incidental : Minor deficiency that is recommended to be promptly addressed, but poses no safety and/or environmental risk. The crane can still be operated at full duty. –> Allow to test Level #2 = Restricted Operation: Deficiency identified that has the potential to limit, de-rate or damage the crane, its surroundings and/or the environment. The duty and locked/ tagged out until the crane's duty and operation should be de-rated or service restricted. –> To be derated Level #3 = Out of Service;The crane should be removed from duty and locked/ tagged out until the deficiency is rectified. –> Not Use	YES (To be verified)	NO	
Function Load Testing			
1. Verify Crane SWL (Existing)	3.0 Metric Tonnes		
2. Verify routine maximum actual load.	2.4 Metric Tonnes		
3. Select the specimen load to be more than actual routine load 1.25 times but not more than SWL. Example # 1 : Crane 's SWL is 18 Metric Tonnes. The routine maximum actual load is 2.4 Metric Tonnes. Therefore, the load testing shall be 2.4 x 1.25 = 3 Metric Tonnes. Example # 2 : Crane 's SWL is 18 Metric Tonnes. The routine maximum actual load is 16 Metric Tonnes. By calculation, the load testing is 16 x 1.25 = 20 Metric Tonnes more than SWL (18 MTon). **Therefore, the load testing shall be 18 Metric Tonnes equal to SWL.**	3.0 Metric Tonnes		
4. Use Auxiliary Winch if specimen load less than or equal 3 Metric Tonne	YES	NO	
5.Use Main Winch if specimen load more than 3 Metric Tonne	YES	NO	
6. The record of load testing : Fill in "Function Test Record" sheet attached.			

RECORDED FUNCTION TEST PROCEDURE

1. CHECK AND RECORD READING RADIUS AND BOOM INDICATIOR AT FOUR (4) VALUES INCLUDING MAXIMUM AND MINIMUM.

(ALL REDIUS MEASUREMENT ARE TO BE TEKEN FROM THE CENTERLINE OF CRANE ROTATION)

ACTUAL	INDICATED RADIUS (FT)
A) 15' (MINIMUM)	15'
B) 20'	20'
C) 25'	25'
D) 30' (INTERMIDIATE)	30'
E) 40'	40'
F) 50' (INTERMIDIATE)	50'
G) 60'	60'
H) 75' (MAXIMUM)	75'

2. CHECK AND RECORD READING ON BOOM ANGLE / DEGREES.

SPECIFICATION			INDICATED BOOM ANGLE (DEGREES)
1). MAXIMUM.	80	DEGREES	80
2). INTERMEDIATE.	60	DEGREES	60
3). INTERMEDIATE.	40	DEGREES	40
4). MINIMUM.	0	DEGREES	0

3. READING ON LOAD INDICATOR WITHOUT SLINGS OR LOAD / LBS. (LOAD BLOCK + WIRE ROPE)

ACTUAL			INDICATOR READ FREE LOAD, (LBS)
1). MAXIMUM RADIUS	785	LBS.	785
2). MINIMUM RADIUS	920	LBS,	920

4. CHECK AND RECORD ENGINE HIGH IDLE SPEED / RPM.

SPECIFICATION			INDICATED OF FUNCTIONAL (RPM)
1). IDLE SPEED	900	RPM	900
2). LOW SPEED	–	RPM	–
3). HIGH SPEED	2700	RPM	2800

5. FUNTIONALLY TEST THE FOLLOWING.

ACTUAL	INDICATED OF FUNCTIONAL (TESTED)
A) MAIN HOIST ANTI -TWO BLOCK.	function
B) AUXILIALY HOIST ANTI -TWO BLOCK.	function
C) HIGH BOOM ANGLE KICK OUT.	N/A
D) LOW BOOM ANGLE KICK OUT.	N/A
E) PRIME MOVER SHUTDOWN.	function
F) EMERGENCY SHUTDOWN.	function
G) ROTATE CRANE 360 LEFT.	Smoot
H) ROTATE CRANE 360 RIGHT.	Smoot

6. RECORD HYDRAULIC RELIEF VALVE PRESSURE SETTING ON FOLLOWING HYDRAULIC FUNCTION:

SPECIFICATION			INDICATED PRESSURE (PSI)
A) MAIN HOIST	3250	PSI.	3250
B) AUXILIALY HOIST	2950	PSI.	2950
C) BOOM HOIST	3000	PSI.	3000

TEST CONDUCTED BY: [redacted] POSITION : CR-Mech

CRANE OPERATOR : POSITION :

COMMENTS : DATE : 18 Jan 2025

WO: 1246648 By Crane PM

Sheet: 200B-50 Eng 3304 DI_Rev.2024

CRANE Mfg.: Nautilus
MODEL: 200B-50
SERIAL NUMBER:

Runtour: 28444 Hr

LOCATION BEWI

BEWI

DATA BASE - PM JOB TASK CARD
WO:1246648

Crew Size: 4
Estimated Hours: 28444

SYSTEM	TASK		Specification	Record/Reading
Safety	Perform Job Safety Analysis (JSA)		Company Spec/Standard	(✓) YES ( ) NO
	Obtain "COMPANY" PERMIT TO WORK		Company Spec/Standard	(✓) YES ( ) NO
	Perform Tool Box Talk		Company Spec/Standard	(✓) YES ( ) NO
	BEFORE/AFTER JOB EXECUTION: Ensure to comply with isolation procedure (LOCK OUT/TAG OUT, WARNING SIGNS and BARRIERS).		Company Spec/Standard	(✓) YES ( ) NO
Required Tools	Insure proper tools are available at the job site		Company Spec/Standard	(✓) YES ( ) NO
	Tool bag		Company Spec/Standard	(✓) YES ( ) NO
	Tool box		Company Spec/Standard	(✓) YES ( ) NO
	Tool Container		Company Spec/Standard	(✓) YES ( ) NO
	MPI equipment and operator		Company Spec/Standard	(✓) YES ( ) NO
	Check safety harness Software and Hardware should be good condition before use		Company Spec/Standard	(✓) YES ( ) NO
	Check Rescue Equipment ready to use onsite		Company Spec/Standard	(✓) YES ( ) NO
	Portable Scaffolding and Crew if require		Company Spec/Standard	(✓) YES ( ) NO
Lubricants	Insure proper lubricants and consumables are available at the job site.		Company Spec/Standard	(✓) YES ( ) NO
	Hydraulic System - Hydraulic Oil	Rando HD-68	OEM Manual	(✓) YES ( ) NO
	Slew Gearbox - Gear Oil	Meropa 220	OEM Manual	(✓) YES ( ) NO
	Auxiliary Hoist - Gear Oil	Meropa 220	OEM Manual	(✓) YES ( ) NO
	Main Hoist - Gear Oil	Meropa 220	OEM Manual	(✓) YES ( ) NO
	Grease Points - Lithium Based **IT MUST NOT INCLUDE MOLYBDENUM DISULPHIDE**	MULTIFAK EP#2	OEM Manual	(✓) YES ( ) NO
	Open Gear Teeth - Open Gear Lube highly water resistant and of an adhesive nature.	OMEGA 73	OEM Manual	(✓) YES ( ) NO
	Wire rope Lubricant Company preferred grade	Birlube 70	OEM Manual	(✓) YES ( ) NO
	Engine Oil - SAE Grade 15W-40 (Delo Gold)	15W-40	OEM Manual	(✓) YES ( ) NO
	Safe Load Indicator fluid	W-15	OEM Manual	(✓) YES ( ) NO
	Engine Radiator - Should have radiator preservatives additives	Cat® SCA	OEM Manual	(✓) YES ( ) NO
Consumables	Spray Cold Galvanize		Company Spec/Standard	(✓) YES ( ) NO
	Denso Tape		Company Spec/Standard	(✓) YES ( ) NO
	WD-40		Company Spec/Standard	( ) YES ( ) NO
History Review	Before starting work, tasks preparation at least 1 day prior to starting work: 1. Review history PM/ CM from Roving Team, 2. Review last PM/ CM/ PMI from Crane Mech, 3. List out all punch list and prepare parts. 4. Review last Certificate task performed		API RP 2D	(✓) YES ( ) NO
	Require to update part history from Crane Mech on following main compenents to ensure the right parts are prepared: - Aux/ Main/ Boom Cylinder, Engine, Swing Gearbox, etc. Reference: Crane OEM information of each part need to be recorded - Manufacturer & Contact info - Model & serial number - Installation date		Company Spec/Standard	(✓) YES ( ) NO
	Review history data from Certificates and incorporate into current PM: - Pull Test Certificates (ongoing update, 4 yr. history). - Load Test Certificates (ongoing update, 4 yr. history). - Wire Rope Certifications (running rope and standing rope) (life of rope). - Hoist Certifications for hoist classified as "personnel handling" hoist.		API RP 2D	(✓) YES ( ) NO
	Review Last Preventative Maintenance Records (Inspection Reports) - Pre-use (Pre-Post Inspection) - 6 Monthly (API RP 2D Not Defined, Company Standard) - 1 Yearly (API RP 2D Defined Annual Inspection)		API RP 2D	(✓) YES ( ) NO
Lifting Gear Preparation	Visually Inspect (Sling, sling hooks and shackles) include Websling / Chain		Company Spec/Standard	(✓) YES ( ) NO
	Check color code / Tag & date inspection		Company Spec/Standard	(✓) YES ( ) NO
General	Determine if access route to-from crane is clean, safe, unobstructed and adequately protected against falls, tripping and slipping		Company Spec/Standard	(✓) YES ( ) NO
	Check drain lines and drip pans for deterioration		API RP 2D	(✓) YES ( ) NO
	Remove any sediment collected in the bottom of drip pans		Industry Standard	(✓) YES ( ) NO
	Check for general crane and components for loss of protective coating and corrosion		Industry Standard	(✓) YES ( ) NO
	Check for missing or loose ,corrosion, deformation pins, pin keepers, bolts, nuts, fasteners of all laders, cages and working platform		API RP 2D	(✓) YES ( ) NO
	Apply grease to exposed grease parts (control valve spools, ball-ring gear, parking brake valve, etc.)		OEM Manual	(✓) YES ( ) NO
Prime Mover	Engine Caterpillar		OEM Manual	(✓) YES ( ) NO
	CATERPILLAR MODEL 3304 DI	S/N.:	OEM Manual	10E05703
		AR.No.:	OEM Manual	1W 3874
	Change engine lube oil & oil filter and check the condition of old oil. As found ;		OEM Manual	(✓) YES ( ) NO
	Check diesel tank level, top up if required.		OEM Manual	(✓) YES ( ) NO
	Check / Clean crankcase breather cap. Change if required		OEM Manual	(✓) YES ( ) NO
	Check / Clean air cleaner filter, Replace if require. (Note : Include inspect air cleaner housing)		OEM Manual	(✓) YES ( ) NO
	Check condition and inspect of the radiator and cap.		OEM Manual	(✓) YES ( ) NO
	Check for any signs of leaks on or around the engine ie; Crankshaft seal for front & rear seal, Engine oil cooler. As found;		OEM Manual	(✓) YES ( ) NO
	Check condition exhaust system for leaks, corrosion, insulation and general. As found ;		OEM Manual	(✓) YES ( ) NO
	Check condition of all engie hoses and tube. (Fuel supply,Cooling system and Lube oil system. As found;		OEM Manual	(✓) YES ( ) NO
	Drain water and sediment form diesel tank. As found ;		OEM Manual	(✓) YES ( ) NO
	Check / Clean Diesel tank level sightglass and diesel tag.		OEM Manual	(✓) YES ( ) NO
	Apply grease of fan bearing/shaft.		OEM Manual	(✓) YES ( ) NO
	Check and inspect the vibration damper and pulley. As found ;		OEM Manual	(✓) YES ( ) NO
	Change water coolant and check condition base of water coolant and record PH.		OEM Manual	(✓) YES ( ) NO
	COOLANT PARAMETERS (PH):	6 or higher	OEM Manual	PH = 9
	HOUR METER PARAMETERS:	LAST READING 28444 HRS	OEM Manual	28444 HRS
	Check and retigthen the bolts of all engine base. / Inspection mouting rubber. As found ;		OEM Manual	(✓) YES ( ) NO

[redacted]

SYSTEM	TASK	Specification	Record/Reading
	Inspect the engine fan blades that there is a break is it severely distorted or rusted. As found ;.....	OEM Manual	(✓) YES ( ) NO
	Change and adjust the tension engine belts. Remark; To check belt Tension, after has engine run more than 30 minules apply 400 N (90 lbs) of force midway between the pulleys. Correctly adjusted belts with deflect 13 to 19 mm (1/2 to 3/4 inch).	OEM Manual	(✓) YES ( ) NO
	Check engine HYD starter drive gear bendix and fly wheel gear teeth condition and record. **Replace if required"	OEM Manual	(✓) YES ( ) NO Bendix Gear : 80 % Fly wheel Gear teeth : 90 %
	Check and inspect condition the Bendix of hydraulic Starter motor.	OEM Manual	(✓) YES ( ) NO
	Lubricate and check engine throttle system.	OEM Manual	(✓) YES ( ) NO
	Determine if the tachometer operates properly: Record Value of Idle & Max Speed (RPMs) Note: Too low Idle (RPMS) will cause excessive worn at winch brake	OEM Manual	
	ENGINE RPM SPECIFIC — IDLE SPEED: 850-950 RPM	OEM Manual	850 RPM
	ENGINE RPM SPECIFIC — MAX SPEED: 2200 RPM	OEM Manual	2200 RPM
	Confirm engine oil pressure as per Parameters below and Record Value:	OEM Manual	
	ENGINE OIL PRESSURE SPECIFIC — Minimum: Not lower then 30 PSI	OEM Manual	40 PSI
	ENGINE OIL PRESSURE SPECIFIC — Maximum: 70 PSI	OEM Manual	60 PSI
	Confirm engine fuel pressure Parameters are correct and Record Value:	OEM Manual	
	ENGINE FUEL PRESSURE SPECIFIC** — Normal: Green Range / 15 psi * *Note;Fuel pressure at high idle is lower than 105 kPa (15 psi)RAMETERS	OEM Manual	(✓) YES ( ) NO
	Confirm engine temperature Parameters and Record Value:	OEM Manual	
	ENGINE WATER TEMP SPECIFIC — NORMAL: 120 - 180 degrees F	OEM Manual	160 F
	Test engine SAFETY DEVICE- ensure engine kill cable shuts off FUEL supply	API RP 2D	(✓) Function ( ) False
	Test engine SAFETY DEVICE- ensure EMERGENCY KILL CABLE - shuts off AIR supply	API RP 2D	(✓) Function ( ) False
	Test engine SAFETY DEVICE- ensure ENGINE low lube oil - releases OIL PRESSURE to ~~activate Alarm/Air System~~ Trip ***Note*** Engine oil pressure low alarm at 20 PSI	Company Spec/Standard	(✓) Function ( ) False
	Test engine SAFETY DEVICE- ensure HIGH TEMP - releases OIL PRESSURE to ~~activate Alarm/Air System~~ Trip	Company Spec/Standard	(✓) Function ( ) False
	Check the general conditionand functioning of turbocharger. Note;	OEM Manual	( ) Leak (✓) Not Leak
	Change fuel filter and inspect the primary hand pump.	OEM Manual	(✓) YES ( ) NO
	Check water temperator regulator.(Thermostat). Change if require refer from cooling temperature.	OEM Manual	(✓) YES ( ) NO
	Check general condition the Governor and control linkage. (Inspect the throtle linkage)	OEM Manual	(✓) YES ( ) NO
	Check or adjust the engine valve lash. (Intake vale = 0.015", Exhaust valve = 0.025")	OEM Manual	(✓) YES ( ) NO
	Check condition wear of pump drive spline and record **Note; Remaining 70% of Original Spline Surface must be replace.	Company Spec/Standard	80 % Remaining
	Check condition wear of adaptor Coulping spline shaft and record **Note; Remaining 70% of Original adaptor Coulping spline shaft Surface must be replace.	Company Spec/Standard	80 % Remaining
	Check condition wear of Coulping spline and record. Re-tigthen of all lock bolts. **Note; Remaining 70% of Original adaptor Coulping spline shaft Surface must be replace.	Company Spec/Standard	80 % Remaining
Hydraulic Start System (Apply for C2-Remote P/F Only)	Check pressure system at the pressure gauge which should reach 3,000 PSI as standard when the system is FULLY charged. Record Value. (As the system cools down, the pressure should drop slightly and finally stabilised.)	OEM Manual	(✓) YES ( ) NO
	Visually inspect all hydraulic connections and hoses for leaks and retighten if necessary. (Caution: This should NOT be done if the system is under pressure.) 1. Slowly release system pressure by loosening the bleed screw on top of the hand pump. 2. Ensure no pressure remains, retighten the suspected leak fitting or replace the damaged hose or component. 3. Retighten the bleed screw on the hand pump. 4. Pump the system up to 2200 - 2600 PSI 5. Inspect that the leak was eliminated.	OEM Manual	(✓) YES ( ) NO
	Function check Accumulator Pre-charge. (Caution: This should NOT be done if the system is under pressure.) 1. Shut the engine off, release system pressure via the bleed screw on top of the hand pump 2. Retighten bleed screw and actuate the hand pump. The pressure will rapidly increase and then stabilised. This pressure is related to accumulator gas pre-charge pressure. 4. If the pressure rapidly increase to 3000 PSI, it indicates that the accumulator has lost its gas charge. 5. Troubleshoot as necessary	OEM Manual	(✓) YES ( ) NO
	Check function rechaging system by function boom down while the engine running. 1. The crane engine is running at 1,000-1500 RPM. 2. Slowly control lever boom function down for charging pressure to accumulator. 3. This pressure should read on prssure gauge between 2200 - 2600 PSI depending on the recharge ratio 80% std. (90% optional). Record Pressure Value.	OEM Manual	2500 PSI
	Check Nitrogen pressure in Accumulator ***Note**spec @ 1,500 psi as follow schematic and if found pressure loss below 1400 PSI then prepare recharge nitrogen in system	OEM Manual	1500 PSI
	Every 36 months or 2000 engine running hours (approximately 1500 starts) replace the high pressure filter.	OEM Manual	(✓) YES ( ) NO
Hoist / Brakes	Visually check a hoist exhibits erratic operation and/or unusual noise, the hoist must be taken out of service until it is inspected and serviced by a qualified technician. Continued operation of a hoist with a defect in a critical component may lead to loss of load control, property damage, serious injury or death.	OEM Manual	(✓) YES ( ) NO
	Visual exteriors of hoist, frames, drums and flanges for damage, leaks, cracks and wear and repair/replace as required to maintain the structural integrity of the hoist.	OEM Manual	(✓) YES ( ) NO
	Check all hoist mounting pins, bolts or other fasteners and replace or tighten as necessary.	OEM Manual	(✓) YES ( ) NO
	Lubricant level must be maintained between the minimum and maximum levels; midway up sight glass or at bottom of level plug port as equipped and check/clean plug vent. Use only the recommended type of lubricant.	OEM Manual	(✓) YES ( ) NO
	Inspect Brake Valve Opening Pressure test V/V 1-1/4" PD Series : no lower than 550 PSI V/V 1-1/2" CH Series : no lower than 575 PSI — Main	Braden Bulletin 527-Dec,1996	600 PSI
	Inspect Brake Valve Opening Pressure test — Aux	Braden Bulletin 527-Dec,1996	600 PSI
	Inspect Brake cylinder opening pressure test. CH/PD Series : 400-450 PSI. — Main	Industry Standard	400 PSI
	Inspect Brake cylinder opening pressure test. — Aux	Industry Standard	400 PSI
	Measure differancian of static and dynamic brake. CH/PD Series : 150-250 PSI. — Main	Industry Standard	200 PSI
	Measure differancian of static and dynamic brake. — Aux	Industry Standard	200 PSI
	Check for external oil leaks and repair as necessary. ~~This is extremely important due to the accelerated wear that will result~~ from insufficient lubricating oil in the hoist.	OEM Manual	(✓) YES ( ) NO
	RECORD BOOM CYLINDER INFORMATION : — Boom cylinder Diameter:	OEM Manual	DIA: 11 Inch
	CY Number:	OEM Manual	L= 03527 R= 03527
	Serial Number:	OEM Manual	L= 3596 R= 43862
	RECORD MAIN HOIST INFORMATION : — Manufacturer:	OEM Manual	Braden
	Model:	OEM Manual	CM 185A-3610-01-1
	Serial Number:	OEM Manual	0100444

[redacted]

SYSTEM	TASK			Specification	Record/Reading
	Check MAIN HOIST for proper operation and good condition			API RP 2D	(✓) YES ( ) NO
	Brake test & record pressure of MAIN HOIST.			OEM Manual	(✓) YES ( ) NO As found Good
	Change main hoist gear oil and inspect for small particles in the old oil. ** Refer to Onsite Gear Oil Sample Procedure ** ** Replace and send oil sample to SKL if abnormal ** ** Take photo of Oil Sampling for Reference**			OEM Manual	(✓) YES ( ) NO As found Good
	RECORD AUXILIARY HOIST INFORMATION :	Manufacturer:		OEM Manual	Braden
		Model:		OEM Manual	PD 12C-29051-02-7
		Serial Number:		OEM Manual	915564
	Check AUXILIARY HOIST for proper operation and good condition			API RP 2D	( ) YES ( ) NO
	Brake test & record pressure of AUXILIARY HOIST			API RP 2D	(✓) YES ( ) NO
	Change Aux. hoist gear oil and inspect for small particles in the old oil. ** Refer to Onsite Gear Oil Sample Procedure ** ** Replace and send oil sample to SKL if abnormal ** ** Take photo of Oil Sampling for Reference** Please record if any abnormal condition. Note.....			OEM Manual	( ) SEND SKL LAB (✓) NOT SEND SKL LAB
	Check pressre relief Valve: Determine hoistes' relief valve pressure gauge is working and giving accurate measurement by notice whether pressure gauge is vibrating or not. if not, set relief valve pressure in accordance with the schematic and parameters below. Record all readings.			OEM Manual	(✓) YES ( ) NO
	BOOM RELIEF VALVE TEST	Relief Specific:	3,000 PSI	OEM Manual	3000 PSI
	MAIN HOIST RELIEF VALVE TEST	Relief Specific:	2,950 PSI	OEM Manual	2900 PSI
	AUX HOIST RELIEF VALVE TEST	Relief Specific:	2,950 PSI	OEM Manual	2900 PSI
	SWING RELIEF VALVE TEST	Relief Specific:	1,200 PSI	OEM Manual	1200 PSI
	Measure Pressure of hoist motor case drains and Record Value Reference Bulletin: BRADEN Inspection, Testing, Preventive Maintenance and Special Operating Instructions For Planetary Hoists PB-308 latest edition for further details.			OEM Manual	
	MAIN HOIST CASE DRAIN for Gear Motor (Down Mode).	PRESSURE	< 100 psi	Company Spec/Standard	10 PSI
	AUX. HOIST CASE DRAIN for Gear Motor (Down Mode).	PRESSURE	< 100 psi	Company Spec/Standard	5 PSI
Hydraulic System	Check hydraulic tank oil level. Oil should be visible in the sight glass. Top up as required (3/4 Tank Minimum)			OEM Manual	(✓) YES ( ) NO
	Check hydraulic oil condition. (Check if running hours are more than 100 hours from last oil change or during Annual inspection) ** Refer to Onsite Hydraulic Oil Sample Procedure ** ** Replace and send oil sample to SKL if abnormal ** ** Take photo of Oil Sampling for Reference**		Rando HD-68	Company Spec/Standard	( ) SEND SKL LAB (✓) NOT SEND SKL LAB
	Inspect hydraulic tank and strainer filter. Change hydraulic oil, if required with lab confirmation.			Company Spec/Standard	(✓) YES ( ) NO
	Drain off 1 liter of oil to remove condensed water. If water is present, drain until water is removed and top up with clean oil			Industry Standard	(✓) YES ( ) NO
	Check for any hydraulic leaks			Industry Standard	(✓) YES ( ) NO
	Check the hydraulic hose, piping and tubing for mechanical damage, corrosion, splits, blisters, cracking or excessive abrasion on the outer surface			API RP 2D	(✓) YES ( ) NO
	Check that all hydraulic hose connections are sound and that all mounting and pivoting connections are secure.			Industry Standard	(✓) YES ( ) NO
	Lubricate hydraulic swivel in pedestal and insure tie down restrains are in place and preventing the swivel from rotating with the crane structure.			OEM Manual	(✓) YES ( ) NO
	Ensure the filler breather on tank is not covered or clogged			Industry Standard	(✓) YES ( ) NO
	Visually inspect for missing or loose pins, pin keepers, bolts, nuts, fasteners on all pumps, motors and valves.			API RP 2D	(✓) YES ( ) NO
	* Re-tighten the stud bolt of hydraulic main pump and marking the nut for checking to prevent loosening. Note : Torqe spec model P76, P75, PGP/PGM350 ,PGP/PGM330 = 200 ft-lbs. , for model PGP/PGM315 = 140 ft-lbs. and PGP/PGM365 = 450 ft-lbs.			The Commercial Intertech manual	(✓) YES ( ) NO
	Check the filter bypass indicator, while engine is running			OEM Manual	(✓) YES ( ) NO
	With engine running (after all other items pass inspection), check the system for leaks around fittings, hoses, valves and reservoirs			Industry Standard	(✓) YES ( ) NO
	With engine running, check the source of any unusual noise or vibration that may cause or indicate equipment damage or wear			Industry Standard	(✓) YES ( ) NO
	Ensure all hoses are properly rated for the system, see "Parameters" for each system for details.			Industry Standard	(✓) YES ( ) NO
	Record hydraulic oil operating temperture. Note: Hydraulic fluid overheating temperature is over 180 F degrees or 82 C, degrees (reservoir temperature)			Industry Standard	130 Degree F
	Determine if hydraulic return pressure gauge is working and giving accurate measurements. Record readings				
	RECORD HYDRAULIC RETURN PRESSURE PARAMETERS:		60 PSI "maximum"	OEM Manual	10 PSI
	Change hydraulic return filters and seals.			OEM Manual	(✓) YES ( ) NO
	Function Testing and record pressures with engine at :		2,200 RPM	API RP 2D	
	BOOM FUNCTION TEST (Need Crane Mech to verify each platform)			OEM Manual	
	Boom Angle : 60 Degree (Recommend or as applicable) — UP	Cracking pressure	RECORD	OEM Manual	500 PSI
		Full Speed Pressure	RECORD	OEM Manual	700 PSI
	DOWN	Cracking pressure	RECORD	OEM Manual	600 PSI
		Full Speed Pressure	RECORD	OEM Manual	2000 PSI
	MAIN HOIST FUNCTION TEST (Need Crane Mech to verify each platform)			OEM Manual	
	Boom Angle : 60 Degree (Recommend or as applicable) — UP	Cracking pressure	RECORD	OEM Manual	200 PSI
		Full Speed Pressure	RECORD	OEM Manual	650 PSI
	DOWN	Cracking pressure	RECORD	OEM Manual	600 PSI
		Full Speed Pressure	RECORD	OEM Manual	1400 PSI
	AUX HOIST FUNCTION TEST (Need Crane Mech to verify each platform)			OEM Manual	
	Boom Angle : 60 Degree (Recommend or as applicable) — UP	Cracking pressure	RECORD	OEM Manual	200 PSI
		Full Speed Pressure	RECORD	OEM Manual	650 PSI
	DOWN	Cracking pressure	RECORD	OEM Manual	600 PSI
		Full Speed Pressure	RECORD	OEM Manual	1400 PSI
	SWING FUNCTION TEST (Need Crane Mech to verify each platform)			OEM Manual	

[redacted]

SYSTEM	TASK				Specification	Record/Reading
	Boom Angle : 60 Degree (Recommend or as applicable)	LEFT	Cracking pressure	RECORD	OEM Manual	200 PSI
			Full Speed Pressure	RECORD	OEM Manual	600 PSI
		RIGHT	Cracking pressure	RECORD	OEM Manual	200 PSI
			Full Speed Pressure	RECORD	OEM Manual	600 PSI
Electrical system, Crane Boom Lighting and red obstruction light	Check the electrical junction boxes, wires and connections for deterioration, desiccant bags, (replace as required)				Industry Standard	(✓) YES ( ) NO
	Check the condition of the grounding and lighting protection system.				Company Spec/Standard	(✓) YES ( ) NO
	Visually inspect boom floodlight and light guards for loose, missing, corroded				Company Spec/Standard	(✓) YES ( ) NO
	Check condition pipe support , U-bolt ,nuts of boom floodlight and Electric slipring for loose , missing , corroded				Company Spec/Standard	(✓) YES ( ) NO
	Check Electric slipring/swivel for 360° continuous rotation				OEM Munnal	(✓) YES ( ) NO
	Check Water ingress, condensation in electric slipring, red obstruction light and boom floodlight				OEM Munnal	(✓) YES ( ) NO
	Check feely movement and lubricate of boom floodlight				OEM Munnal	(✓) YES ( ) NO
	With generator in operation, intergize all lights to unsure proper function.				API RP 2D	(✓) YES ( ) NO
	Check condition of crane boom lighting and safety net is secured with strong point. * **Safety net should be replace 24 months after installation (2 year)***			Last installation date _____	Company Spec/Standard	(✓) YES ( ) NO
	Check function of crane sound signal				Company Spec/Standard	(✓) YES ( ) NO ( ) N/A
	Check function of crane boom lighting at boom upper section				Company Spec/Standard	(✓) YES ( ) NO ( ) N/A
	Check function of crane boom lighting at boom lower section				Company Spec/Standard	(✓) YES ( ) NO ( ) N/A
	Check function of crane boom lighting at winch skid				Company Spec/Standard	(✓) YES ( ) NO ( ) N/A
	Check function of crane boom lighting at crane cabin				Company Spec/Standard	(✓) YES ( ) NO ( ) N/A
	Check function becon light at boom tip				Company Spec/Standard	(✓) YES ( ) NO ( ) N/A
	Inspection wire rope guide & Roller assembly				Company Spec/Standard	(✓) YES ( ) NO
	Visually inspect red obstruction light pipe support, u-bolts, nuts connection to hand rail for loose, missing, corroded				Company Spec/Standard	(✓) YES ( ) NO
	Visually inspect safety sling attached to the red obsruction light and its base for loose, missing, corroded				Company Spec/Standard	(✓) YES ( ) NO
	Visually inspect red obstruction light function. The light is designed to turn on all the time.				Company Spec/Standard	(✓) YES ( ) NO
Operator Control Station	Check general condition of control panel, bolts, paint security, etc.				API RP 2D	(✓) YES ( ) NO
	Determine if there is a serviceable fire extinguisher in the vicinity of the crane				Company Spec/Standard	(✓) YES ( ) NO
	Determine if correct load chart is in use and easily visible for operator				API RP 2D	(✓) YES ( ) NO
	Determine if charts, indicators and hand signal chart are in the cabling and firmly attached				API RP 2D	(✓) YES ( ) NO
	Determine if angle/radius indicator plate is easily visible to operator and is moving freely.				API RP 2D	(✓) YES ( ) NO
	Check condition of control levers and determine if they "dead-man" back to the neutral position.				API RP 2D	(✓) YES ( ) NO
	Check condition of pressure gauges.				API RP 2D	(✓) YES ( ) NO
	Check proper control labels are firmly installed, completely legible and properly labeled				API RP 2D	(✓) YES ( ) NO
	Check controls for freedom-of-movement				API RP 2D	(✓) YES ( ) NO
	Check condition , Leak, freely moement of Dynamic swing break system *** Note; If HYD Oil loose in CYD reservoir must be refill*				OEM Manual	(✓) YES ( ) NO
	Check condition , Leak, freely moement of Accelerate System ** Note; If HYD Oil loose in CYD reservoir must be refill*				OEM Manual	(✓) YES ( ) NO
	Check all safety glass and rubber seal for proper condition				API RP 2D	(✓) YES ( ) NO ( ) N/A
	Ensure PRE/POST Check List and Pocket Manual in the cabin. Note;.....				Company Standard	(✓) YES ( ) NO ( ) N/A
Load Indicator System	Visual check on fittings and connections for leaks. Fix leak if any. Note;.....				OEM Manual	(✓) YES ( ) NO
	Should any leaks exist, stop leak and recharge system, refer to maintenance manual				OEM Manual	(✓) YES ( ) NO
	Change and flushing Load cell fluid.				OEM Manual	(✓) YES ( ) NO
	Check general condition of tubbing, hoses, pins bolts, paint, etc.				Industry Standard	(✓) YES ( ) NO
	Insure load cell is free of obstructions				OEM Manual	(✓) YES ( ) NO
	Check condition of gauge(s) face and clean glass as required.				OEM Manual	(✓) YES ( ) NO
	Check the scale's operation and weighing accuracy. (Main Hoist) Remark : Maximum variance +/- 2% Note;.....				Company Spec/Standard	(✓) YES ( ) NO ( ) N/A
	Check the scale's operation and weighing accuracy. (Aux. Hoist) Remark : Maximum variance +/- 2% Note;.....				Company Spec/Standard	(✓) YES ( ) NO ( ) N/A
	Check the internal casting fluid of weight indicator. top up if required				Industry Standard	(✓) YES ( ) NO ( ) N/A
	Insure SWL tag matches ratings on the Crane Load Chart.				OEM Manual	(✓) YES ( ) NO ( ) N/A
	Insure Boom Length, matches the Crane Load Chart				OEM Manual	(✓) YES ( ) NO ( ) N/A
	Insure Boom Angle measurements and readings match the boom angle indicator.				OEM Manual	(✓) YES ( ) NO ( ) N/A
	Insure Boom Radius measurements indicate the distance from center line of the crane to the hook				OEM Manual	(✓) YES ( ) NO ( ) N/A
	Check Main load cell gap 1/4 (0.250) inch				OEM Manual	(✓) YES ( ) NO ( ) N/A
	Check Aux load cell gap 3/8(0.380) inch (Compression Load Cell Type)				OEM Manual	(✓) YES ( ) NO ( ) N/A
Pedestal & Structure	Visually check Pedestal for chipped/cracked paint, deformation, worn parts, dents, corroded areas, cracks weld, etc.				API RP 2D	(✓) YES ( ) NO
	Check water rain drain at pedestal must be not obstuct				Industry Standard	(✓) YES ( ) NO
	Check pin and cotter pin of pedestal missing , corrosion, wear, damage and exercise pin.				Industry Standard	(✓) YES ( ) NO
	Visually check Base - Plate connection and Base hoist Structure for chipped/cracked paint, deformation, worn parts, dents, corroded areas, cracks weld, etc.				API RP 2D	(✓) YES ( ) NO
	Check A fixed such as Handrial, Walkway, Grating, stationary structure without significant movement in response to waves and currents in normal operating conditions.				API RP 2C	(✓) YES ( ) NO
	Visually check and lubricate maintenance Jib. ***Note*** If on pedestal crane				OEM Manual	(✓) YES ( ) NO ( ) N/A
	Check maintenance jib is secure firmly. ***Note*** If on pedestal crane				OEM Manual	(✓) YES ( ) NO ( ) N/A
Box Boom & Luffing CYD	Check and Verify entire box boom and Boom CYD for loss of protective coating and corrosion. Note;.....				API RP 2D	(✓) YES ( ) NO
	Check and Verify entire box boom and Boom CYD for chipped/cracked paint, deformation, worn parts, dents, corroded areas, cracks, etc. Note;.....				API RP 2D	(✓) YES ( ) NO
	Check and Verify boom end connections, for bends, dents, corroded areas, cracked welds, and signs of mechanical damage, wear, etc. **any deviation should be reported**				API RP 2D	(✓) YES ( ) NO
	Check and Verify boom rest and wooden support to ensure it's in good condition				API RP 2D	(✓) YES ( ) NO
	Inspect pin and pin holes of Upper tank and Lower tank for excessive clearance				OEM Manual	(✓) YES ( ) NO
	BOOM CYLINDER PIN MAXIMUM TOLERANCE			0.125 inch (3mm)	Industry Standard	As found 0.030
	Check BOOM CYLINDERS for proper operation and good condition				API RP 2D	(✓) YES ( ) NO

[redacted]

SYSTEM	TASK	Specification	Record/Reading
	Check Boom cylinder barrels and rods for leaks, mechanical damage and corrosion	Industry Standard	(✓) YES ( ) NO
	Check and measurement boom foot pin and connection pins for clearance	Industry Standard	
	BOOM FOOT PINS & BOOM BOX CONNECTER PIN TOLERANCE — 0.125 inch (3mm)	Industry Standard	
	Boom Foot Pin Tolerance	Industry Standard	0.010 inch
	Boom Box Connecter Pin Tolerance	Industry Standard	0.010 inch
	Check connecting bolts of box boom loose, corrosion, wear, damage	OEM Manual	(✓) YES ( ) NO
	Lubricate boom foot pins and bushings	OEM Manual	(✓) YES ( ) NO
	Lubricate boom cylinder pins, bearings and bushings	OEM Manual	(✓) YES ( ) NO
	Boom function test angle/radius to correction **Note; The cylinder(s) mechanism shall be capable of elevating the boom from a minimum of zero degrees to the maximum recommended boom angle.	API RP 2C	(✓) YES ( ) NO
	Operation functional test and verify Boom Creeping down **Note ; Test at angle 60 °	Industry Standard	(✓) YES ( ) NO As found Good
Wire Rope	Determine if parts-of-line match parts of line on the load chart in the crane cabin.	API RP 2D	(✓) YES ( ) NO
	Determine if visible portion of wire rope adequately lubricated. If not lubricate wire rope	API RP 2D	(✓) YES ( ) NO
	For each layer of wire rope on drum, check that all rope is parallel and each crossover point at hoist flanges is correct	API RP 2D	(✓) YES ( ) NO
	The top layer of rope must not be lower to the flange tips 2.5 in for Smooth drum,2 in for groove drum or 2.5 times of wire rope diameter	API RP 2C	(✓) YES ( ) NO
	Inspect wire rope for, kinking, crushing, broken wires, necking down of rope diameter, worn outside wires, corroded or broken wires at end connection, cutting or unstringing.	API RP 2D	(✓) YES ( ) NO As found Good
	NoteRunning Ropes of rotation-resistant construction used in the main or auxiliary Hoist: - Four (4) Randomly distributed broken wires within 30 rope diameter - Two (2) broken wires in one stand within 6 rope diameter	API RP2D Edition 7	(✓) YES ( ) NO As found Good
	One valley break can indicate internal rope damage requiring close inspection of this section of the rope. When one or more valley breaks are found in one lay length the rope should be retired.	API RP2D Edition 7	(✓) YES ( ) NO As found Good
	Reductions for the rope diameter, from initial wire rope dimensional measurements, in a nonworking area (an area away from the sheaves) compared to the lowest diameter of rope measured in three working areas (areas where the rope regularly goes over a sheave) of more than the following is observed: — 3/64 in. (0.047 in.) (1.2 mm) for diameters up to and including 3/4 in. (19.1 mm); — 1/16 in. (0.062 in.) (1.6 mm) for diameters of 7/8 in. to 1-1/8 in. (22.2 mm to 28.6 mm); — 3/32 in. (0.093 in.) (0.8 mm) for diameter of 1-1/4 in. to 1-1/2 in. (31.8 mm to 38.1 mm); — For rope diameters greater than 1-1/2 in., a 5 % diameter loss from baseline measurement. —Wear of one-third the original diameter of the outside individual wires.	API RP2D Edition 7	(✓) YES ( ) NO As found dimension Good
	Increase in the length of an individual rope lay is observed. This increase in lay length and accompanying reduction in diameter can be caused by failure of the core. This can occur more readily in ropes or rotation-resistant construction.	API RP2D Edition 7	(✓) YES ( ) NO As found Good
	-Inspection and Verify running and standing rope from heat effect **Note; Not more than 250°C -There is evidence of heat damage from any source (i.e. engine exhaust, flare towers, stress corrosion cracking, etc.). Heat can be generated by passing a rope over a frozen or non-turning sheave, contact with structural members of the crane, improperly grounded welding leads or lightning strikes	Industry Standard	(✓) YES ( ) NO As found Good
	With the boom at the highest possible angle and the main load block or overhaul ball at the water level, ensure there is a minimum of 5 wraps of wire-rope remaining on the drums. Note: (Thai law, requires minimum of 2 wraps)	API SPEC 2C / Thai Law	(✓) YES ( ) NO
	Reference: · Running rope safety factor not less than 6 for wire rope that are running wire, (Thai law; Wire rope nominal breaking strength x number parts of line / Design factor 6) · Standing rope safety factor not less than 3.5 for wire rope that are stay cables, (Thai law)	Thai Law	(✓) YES ( ) NO ( ) N/A
	Measure and record nominal diameter of "running ropes"main and auxiliary (particularly on drum, equalizer sheave and at sockets, clips and dead end points) *****Nominal = several measurements added together divided by Number of measurements*****	API RP 2D	(✓) YES ( ) NO
	Inspect wire rope and record dimension.	API RP 2D	
	MAIN WIRE ROPE OD: — FULL DRUM	OEM Manual	0.730 inch
	MAIN WIRE ROPE OD: — HALF DRUM	OEM Manual	0.735 inch
	MAIN WIRE ROPE OD: — WATER LEVEL	OEM Manual	0.737 inch
	AUX WIRE ROPE OD: — FULL DRUM	OEM Manual	0.562 inch
	AUX WIRE ROPE OD: — HALF DRUM	OEM Manual	0.562 inch
	AUX WIRE ROPE OD: — WATER LEVEL	OEM Manual	0.577 inch
	Slip-Cut 1 meter of all ropes at the wedge socket and re-wedge to prevent rust inside of wedge socket (at outward end of rope, not on hoist drum) Dead end tail length is never less than 6 inches, or: - Standard 6 to 8 Strand wire rope is not less than 7 times the rope diameter - Rotation Resistant Wire Rope is not less than 20 times the rope diameter	Company Spec/Standard	(✓) YES ( ) NO
	U-bolt and Fist Grip Clips: Extreme care should be exercised to assure proper orientation of U-bolt clips. The U-bolt segment shall be in contact with the wire rope dead-end. The orientation, spacing, torquing, and number of all clips shall be in accordance with the crane manufacture's specifications.	API SPEC 2C	(✓) YES ( ) NO
	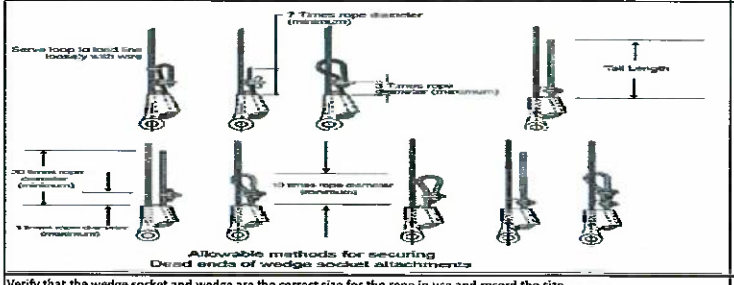 Allowable methods for securing Dead ends of wedge socket attachments	API SPEC 2C	Model ans Size wedge socket. Main hoist. Model CC Size 3/4 Aux.Hoist. Model CC Size 9/16
	Verify that the wedge socket and wedge are the correct size for the rope in use and record the size	API SPEC 2C	(✓) YES ( ) NO
Sheaves & Bearings	Lubricate all sheave bearings.	API RP 2D	(✓) YES ( ) NO
	Visually inspect all sheaves and bushings for cracks, wear and deterioration	API RP 2D	(✓) YES ( ) NO As found Good
	Visually inspect wire rope track of sheave for rope imprints, wear and deterioration. If damage exist sheave should be resurfaced or replaced.	API RP 2D	(✓) YES ( ) NO As found Good

[redacted]

SYSTEM	TASK	Specification	Record/Reading
	Pins retained by snap rings, bolt lock shafts, plates lock should be checked for missing or loose for all	API RP 2D	(✓) YES ( ) NO
	Check wirerope guards and keepers for proper location and condition.	API RP 2D	(✓) YES ( ) NO
	Determine if wire rope is jumping the sheaves, by looking for signs of damage on the sheave brim	Industry Standard	(✓) YES ( ) NO
	Sheave Rope Profile for optimum Rope life the sheave groove profile should be correctly matched to the rope diameter	Industry Standard	(✓) YES ( ) NO
	Check rope sheave should be machine grooved to adepth of not less than 1.5 times the norminal diameter of the rope	Industry Standard	(✓) YES ( ) NO
	MAIN POINT SHEAVES: Note;.....	Industry Standard	No.1 (✓) YES ( ) NO No.2 (✓) YES ( ) NO
	AUX SHEAVES: Note;.....	Industry Standard	No.1 (✓) YES ( ) NO
	IDLER SHEAVES: Note;.....	Industry Standard	AUX. (✓) YES ( ) NO Main (✓) YES ( ) NO
	Pins for bronze bushing and straight roller bearing should have a running clearnace of .031 inch/ sheave of end play and should be adjusted accordingly.(count from left)	Industry Standard	(✓) YES ( ) NO
	MAIN POINT SHEAVES:	Industry Standard	Sheave No.1 18 inch Sheave No.2 18 inch
	AUX SHEAVES:	Industry Standard	Sheave No.1 14 inch
	IDLER SHEAVES:	Industry Standard	Sheave AUX 24.9 inch. Sheave Main 24.9 inch.
	Ensure the sheaves are aligned and the fleet angle is correct **Remark ; Wire rope User's Manual allows 2 degree on grooved winch drum, Smooth Drum shuold be not more than 1-1/2 degree	API RP 2D	(✓) YES ( ) NO
	Determine if wire rope size and sheave sizes/grooves are compatible and record size. Sheave pitch diameter (D) to nominal wire rope diameter (d) ratio (D/d) shall not be less than 18:1	API SPEC 2C	(✓) YES ( ) NO
	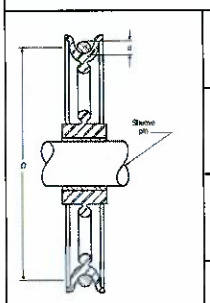 MAIN POINT SHEAVES: SHEAVE D / WIRE ROPE d = >18	API SPEC 2C	18 inch (D) 0.750 inch (d) 24 (Ratio D/d)
	AUX SHEAVES: SHEAVE D / WIRE ROPE d = >18	API SPEC 2C	14 inch (D) 0.562 inch (d) 24.9 (Ratio D/d)
	IDLER SHEAVES: SHEAVE D / WIRE ROPE d = > 18 (If applicable)	API SPEC 2C	18 inch (D) 0.750 inch (d) 24 (Ratio D/d)
	MAIN BLOCK SHEAVES: SHEAVE D / WIRE ROPE d = > 16	API SPEC 2C	16 inch (D) 0.750 inch (d) 21.3 (Ratio D/d)
Load Block	Load Block: Check the load block for cleanliness, binding sheaves, damaged or worn sheaves, worn or distorted sheave pins, broken bolts, and worn cheek weights. Note ;.....	Industry Standard	( ) YES ( ) NO As found Good
	Hook: Check the hook damage, excessive wear to the hook safety latch, hook swivel trunnions, thrust collar, securing, damage or missing lubrication fittings, proper lubrication, cracks and gouges, and if visibly bent or twisted or has been exposed to welding or arching. Note ;.....	Industry Standard	(✓) YES ( ) NO As found Good
	Hook: Tip has been bent more than 10 degree out of plane from the hook body	Industry Standard/API RP2D7	(✓) YES ( ) NO As found Good
	Inspect the Pins for bronze bushing and straight roller bearing should have a running clearnace of .031 inch/ sheave of end play and should be adjusted accordingly	Industry Standard	(✓) YES ( ) NO
	Inspect Hook or shackle to swivel case clearance is set at .031 to .062 inch, Clearance exceeding .12 to .18 (ONLY CROSBY BRAND)	OEM Crosby	(✓) YES ( ) NO
	OEM STANDARD RECOMMEND that Crane block removal from service untill replaced and repair following below	OEM STANDARD	
	- Elongated center pin and hook trunnion holes exceeding 5% of Original diameter	OEM STANDARD	(✓) YES ( ) NO As found Good
	-Material loss due to wear exceeding 10% of original section	OEM STANDARD	(✓) YES ( ) NO As found Good
	-Sheave wire rop groove diameter smaller than 2.5%	OEM STANDARD	(✓) YES ( ) NO As found Good
	Loosened tie bolts nuts, center pin round nuts, check weight cap screws and hook nut cap screws. Tie bolt nuts to be torqued to 35-40 ft.Lbs and restaked, all other fasteners wrench tight	OEM STANDARD	(✓) YES ( ) NO
	Throat opening - any distortion causeing an increase in throat opening of 5% not ot exceed 1/4 in. (6 mm.)(or as recommended by the manufacturer)	ASME B30.10	(✓) YES ( ) NO
	Inspect rope track worn in sheave groove, sheave must be resurface or replace	API RP 2D	(✓) YES ( ) NO
	Ensure the load block is not using "Cast Iron" cheek weights they can not be used as per API	API SPEC 2C	(✓) YES ( ) NO As found Good
	Determine if all hooks are equipped with properly operating safety latches and check for proper functioning	API RP 2D	(✓) YES ( ) NO
	Lubricate sheave bearings and swivels	OEM Manual	(✓) YES ( ) NO
	Re-thighten nut firmly to point at which trunion will just rotate, the Re-tighten set-screw in nut and thread condition as in the picture below,	Industry Standard	(✓) YES ( ) NO
	Last NDE inspection record	Industry Standard	Last Inspect date_____
	RECORD LOAD BLOCK INFORMATION : Manufacturer:	OEM Manual	
	Model:	OEM Manual	
	Serial Number:	OEM Manual	

[redacted]

SYSTEM	TASK	Specification	Record/Reading
	Record Load block measurements and details for future comparison with historical data	Industry Standard	(✓) YES ( ) NO
	A - Block OD	Industry Standard	19.5 mm/ inch
	B - Block length	Industry Standard	43 mm/ inch
	C - Center of Pin to hook Saddle	Industry Standard	31.5 mm/ inch
	D1 - Sheave Diameter	Industry Standard	16 mm/ inch
	E - Block Width	Industry Standard	3.5 mm/ inch
	F - Throat Opening	Industry Standard	7 mm/ inch
	G - Trunnion	Industry Standard	0.068 mm/ inch
Auxiliary Ball	Inspect Auxiliary ball for cleanliness, binding swivel, work pad-eye hole. Inspect the hook damage, excessive wear to the hook safety latch, Bent connector plates,Severe corrosion pitting, hook swivel trunnions, thrust collar, securing, damage or missing lubrication fittings,Loose, missing or damaged retaining nuts, cotter pins or swivel set screws ,Missing or illegible rating and warning tags, proper lubrication, cracks and gouges, and if visibly bent or twisted or has been exposed to welding or arching.	Industry Standard	(✓) YES ( ) NO
	Hook: Tip has been bent more than 10 degree out of plane from the hook body	Industry Standard/API RP2D7	(✓) YES ( ) NO
	OEM STANDARD recommend that Crane overhaul ball removal from service untill replaced and repair following below	OEM STANDARD	
	- Elongated ball pin holes, hook latch pin holes and swivel eye exceeding 5% of original diameter,	OEM STANDARD	(✓) YES ( ) NO As found Good
	-Swivel end play gap exceeding .06". Excessive end play indicates damaged internal set screw	OEM STANDARD	(✓) YES ( ) NO As found Good
	-Material loss due to wear exceeding 10% of original section	OEM STANDARD	(✓) YES ( ) NO As found Good
	Throat opening - any distortion causeing an increase in throat opening of 5% not ot exceed 1/4 in. (6 mm.)(or as recommended by the manufacturer)	ASME B30.10	(✓) YES ( ) NO
	All hooks that lift personnel are to have a positive locking safety latch **locking Pin to be used while lifting personnel**	API RP 2D	(✓) YES ( ) NO
	*** Temperature Effected : When hooks are to be used at temperature above 400° F. (204°C) or below -40°F (-40°C), the hook manufacturer or a qualified person should be consulted *** Chemically Active Environment : The strength of hooks can be affected by chemically active environments, such as caustic or acid substances or fumes. The hook manufacturer or qualified person should be consulted before hooks are used in chemically active environment	ASME B30.10	
	Verify to ensure nut firmly at which trunion rotate. Identify to set-screw in nut/ swivel/ counter pin and thread condition.	Industry Standard	(✓) YES ( ) NO
	Last NDE inspection record	Industry Standard	Last inspect date _____
	RECORD AUX BALL INFORMATION : Manufacturer:	OEM Manual	John Sony
	Model:	OEM Manual	OBCEE150-A
	Serial Number:	OEM Manual	673521
	Record Auxiliary Ball measurements and details for future comparison with historical data: For Model MB07T200E ONLY	Industry Standard	
	AA Dimensions 3.0 Inch	Industry Standard	1.7 mm/ inch
	A Dimensions 24.89 Inch	Industry Standard	24.10 mm/ inch
	B Dimensions 21.71 Inch	Industry Standard	12.00 mm/ inch
	C Dimensions 12.50 Inch	Industry Standard	1.38 mm/ inch
	D Dimensions 1.61 Inch	Industry Standard	1.81 mm/ inch
	E Dimensions 1.81 Inch	Industry Standard	1.46 mm/ inch
	F Dimensions 1.38 Inch	Industry Standard	1.55 mm/ inch
	H Dimensions 1.38 Inch	Industry Standard	1.34 mm/ inch
	I Dimensions 0.88 Inch	Industry Standard	1.03 mm/ inch
	J Dimensions 1.31 Inch	Industry Standard	1.31 mm/ inch
Safety system	Check Condition anti - two block , hanging chain ,eye bolts , fix bolts , shackle for missing , corrosion , erosion , deformation	API RP 2D	(✓) YES ( ) NO
	Check anti - two block kick out plate for freely movement	Company Spec/Standard	(✓) YES ( ) NO
	Check anti-2-block device proper function of Main winch	Company Spec/Standard	(✓) Function ( ) False
	Check anti-2-block device proper function of Aux. winch	Company Spec/Standard	(✓) Function ( ) False
	Check relation of boom radius and boom angle (lowest, middle, highest) with refrence to load chart. Recharge fluid W-15 to load indicator, if required.	API RP 2D	(✓) YES ( ) NO
	Functional test of emergency lowering system (See procedure in Emergency Load Lowering Box). Note: Keep for 1 Yr PM to sustain crane mechanic competency. Caution: Function test must be performed on top deck with max 2-foot height.	Company Spec/Standard	(✓) YES ( ) NO ( ) N/A
	Visually check emergency load lowering kit. Ensure EMERGENCY LOWERING PROCEDURE and MATERIAL LIST are in the box. - Ensure ALL items shown on the list are in the box and in good condition - SECURE THE BOX WITH A TIE WRAP.	Company Spec/Standard	(✓) YES ( ) NO ( ) N/A
Slew Mechanism	Visually check for damage and excessive wear on gear teeth	OEM Manual	(✓) YES ( ) NO
	Visually check slew gear box in the area of oil seal for any leaks	API RP 2D	(✓) YES ( ) NO
	RECORD SLEW GEAR BOX INFORMATION : Manufacturer:	OEM Manual	Eskridge
	Model:	OEM Manual	150A
	Serial Number:	OEM Manual	–
	CHECK and RE-TORQUE swing drive gearbox mounting bolts at following brands: - ESKRIDGE, Model: 250 = 150 FT-LBS	API RP 2D	(✓) Yes ( ) No
	Check swing gearbox oil level/condition, top up if required	OEM Manual	(✓) YES ( ) NO

[redacted]

SYSTEM	TASK		Specification	Record/Reading
	Monitor slew gearbox oil condition by visually examine for burnt smell, metal particles, and/or other contaminants, record and change if found.	Meropa 220	OEM Manual	(✓) CHANGE OIL ( ) NOT CHANGE OIL
	Change slew gear box oil		OEM Manual	(✓) CHANGE OIL ( ) NOT CHANGE OIL
	Grease all pivot points of slew ring (bearing)		OEM Manual	(✓) YES ( ) NO
	Grease open gears (pinion)		OEM Manual	(✓) YES ( ) NO
	Rotate crane 360 degree and check smoothness of operation		OEM Manual	(✓) YES ( ) NO
	Check swing drive static parking brake for proper operation Caution: DO NOT stop the swing of the crane with this static brake (parking brake)		OEM Manual	(✓) YES ( ) NO
	Check swing drive dynamic parking brake for proper operation		OEM Manual	(✓) YES ( ) NO
	Check swing lock mechanism condition; corrosion ,dent , loos all part,worn and wear		OEM Manual	(✓) YES ( ) NO As found condition: Good
	Check swing lock mechanism freely lock and unlock for function. **Check and inspect for hydraulic for leaks on actuator model.**		OEM Manual	(✓) YES ( ) NO As found condition: Good
	Check condition of slew ring bolts e.g. Bolt grade and washers. Caution: Use only hardened flat washers under head of bolt. Do not use lock washers, or regular flat washers.		Industry Standard	(✓) YES ( ) NO As found condition: Good
	Monitor ball-ring grease sample. If found wear and tear particles, take sample and send to lab. **Wear assessment by grease sample analysis--wear may be monitored by periodic grease sample analysis as describe in this section. Grease samples should be collected every twelve months as a minimum and the results of the analysis recorded; this period should be shortened if obvious metal or contaminants are present.		API PR 2D	(✓) SEND TO LAB ( ) NOT SEND TO LAB As found: Good
	Verify crane condition and load test as separate procedure. **Table 1—Static/Onboard Test Load and Radius** Static/Onboard Rated Load at a Specific Radius lb (kg) / Test Loads in Excess of Static/Onboard Rated Load at a Specific Radius ≤ 40,000 (18,144) / 25 % > 40,000 ≤ 100,000 (>18,144 ≤ 45,356) / 10,000 lb (4536 kg) > 100,000 (45,356) / 10 %		API 2C	(✓) YES ( ) NO Specific test load: 150 lbs.
	Verify crane condition and load test as separate procedure. " Record crane load test in load test form."		Company Standard	(✓) YES ( ) NO

Risk Level Definitions: The following 3 levels indicate the impact the noted deficiency poses to the operation or structural integrity of the equipment:

Level 1 = Incidental	Level #2 = Restricted Operation	Level #3 =Out of Service
Minor deficiency that is recommended to be promptly addressed, but poses no safety and/or environmental risk. The crane can still be operated at full duty.	Deficiency identified that has the potential to limit, de-rate or damage the crane, its surroundings and/or the environment. The duty and locked/ tagged out until the crane's duty and operation should be de-rated or service restricted.	The crane should be removed from duty and locked/ tagged out until the deficiency is rectified.

System:	Risk Level:	Component: HYD. HOSE Location: AUX WINCH	In Accordance with: Date Originated:
Description:	HYD. HOSE -16 X 300" HYD. SWIVEL to AUX down / AUX up to drum valve Qty 2 SET		
Recommended Action:	NEED TO REPLACE		
Recommended urgency timeframe for corrective action:		Completed Date:	Completed By:

System:	Risk Level:	Component: HYD. HOSE Location: LUFFING CYLINDER	In Accordance with: Date Originated:
Description:	HYD. Hose -12 X 135" 2 EA Boom up - Down		
Recommended Action:	NEED TO REPLACE		
Recommended urgency timeframe for corrective action:		Completed Date:	Completed By:

System:	Risk Level:	Component: BOOM Location: BOOM CONNECTION.	In Accordance with: Date Originated:
Description:	HYD. Hose -8 X 50" 2 EA Boomconnex load cell.		
Recommended Action:			
Recommended urgency timeframe for corrective action:		Completed Date:	Completed By:

System:	Risk Level:	Component: ENGINE Location: POWER UNIT.	In Accordance with: Date Originated:
Description:	- Buffer Exhaust Corrosion		
Recommended Action:	- ELBOW EXHAUST OUTLET TO FLEXIBLE PIPE DAMAGE		
Recommended urgency timeframe for corrective action:		Completed Date:	Completed By:

System:	Risk Level:	Component: HYD. HOSE Location: SWING GEAR BOX	In Accordance with: Date Originated:
Description:	HYD. Hose -12 X 120" 2 EA Swing to SWIVEL -12 X 150" 2 EA swing to DOWN		
Recommended Action:			

THE PEDESTAL CRANE CONDITION VERIFICATION

Date : 31/05/25			
Crane Owner : CTEP/ COTL Field: Bonthangas Platform/ Vessel: BBWJ			
Crane Owner 's representative : (Mech Supv./ M'Dent) [redacted]			
Qualified Inspector : (Qualified Crane Mechanic)			
Inspector 's company / agency : (Third Party or Outsource to witness if applicable)			
Manufacture Nautilus Fabrication by Oil State Year of Fabrication 2001 Country USA Model / Serial 2008-50 / 010/05 Standard API Edition 2 Edition 1995			Remark
Safe Working Load (SWL) --> OEM	19.3 Metric Tonnes		
Safe Working Load (SWL) --> Existing via MOC, if applicable	— Metric Tonnes		
Boom length, Main	50 Ft		
Boom length, Auxiliary if applicable	— Ft		
Part of line main hoist	4 Part line		
Part of line auxiliary hoist	1 Part line		
Safe Working Load at longest boom radius	50 ft	33733 Metric Tonnes/ Lbs	
Safe Working Load at shortest boom radius	6 ft	42606 Metric Tonnes/ Lbs	
The document of crane specification for Testing , Maintenance and Inspection are provided by:	OEM	MOC / Crane Engineer	
Has the crane ever been modified by MOC ? (To verify if this crane is modified with MOC --> Allow to test the crane. If this crane is modifed without MOC --> Not allow to test the crane)	YES	(NO)	(Employers are not allowed to modify or adjust any part of cranes or dericks or consent to other persons to do these things, that might reduce the safety of the employees who work with the cranes or derricks).
Does the rotating part have proper guard in place?	(YES)	NO	(Need mitigation plan)
Is the ladder and hand rail in place?	(YES)	NO	(Need mitigation plan)
Is the maintenance platform in place?	(YES)	NO	(Need mitigation plan)
Is the SWL tag labelled on crane pedestal, main block or aux ball?	(YES)	NO	(Need mitigation plan)
Verify if the crane major component damaged or not	YES (Need to repair or mitigate unsafe condition with MOC before testing)	(NO)	(Employers shall not allow employees work with damaged/ unsafe cranes or derricks)
Inspect boom end connections, for bends, dents, corroded areas, cracked welds, and signs of mechanical damage, wear, etc. **any deviation should be reported** Level 1 = Incidental : Minor deficiency that is recommended to be promptly addressed, but poses no safety and/or environmental risk. The crane can still be operated at full duty. --> Allow to test Level #2 = Restricted Operation: Deficiency identified that has the potential to limit, de-rate or damage the crane, its surroundings and/or the environment. The duty and locked/ tagged out until the crane's duty and operation should be de-rated or service restricted. --> To be derated Level #3 = Out of Service;The crane should be removed from duty and locked/ tagged out until the deficiency is rectified. --> Not Use	YES (To be verified)	(NO)	
Function Load Testing			
1. Verify Crane SWL (Existing)	2.4 Metric Tonnes		
2. Verify routine maximum actual load.	3.0 Metric Tonnes		
3. Select the specimen load to be more than actual routine load 1.25 times but not more than SWL. Example # 1 : Crane 's SWL is 18 Metric Tonnes. The routine maximum actual load is 2.4 Metric Tonnes. Therefore, the load testing shall be 2.4 x 1.25 = 3 Metric Tonnes. Example # 2 : Crane 's SWL is 18 Metric Tonnes. The routine maximum actual load is 16 Metric Tonnes. By calculation, the load testing is 16 x 1.25 = 20 Metric Tonnes more than SWL (18 MTon). Therefore, the load testing shall be 18 Metric Tonnes equal to SWL.	3.0 Metric Tonnes		
4. Use Auxiliary Winch if specimen load less than or equal 3 Metric Tonne	(YES)	NO	
5.Use Main Winch if specimen load more than 3 Metric Tonne	(YES)	NO	
6. The record of load testing : Fill in "Function Test Record" sheet attached.			

RECORDED FUNCTION TEST PROCEDURE

1. CHECK AND RECORD READING RADIUS AND BOOM INDICATIOR AT FOUR (4) VALUES INCLUDING MAXIMUM AND MINIMUM.

(ALL REDIUS MEASUREMENT ARE TO BE TEKEN FROM THE CENTERLINE OF CRANE ROTATION)

ACTUAL	INDICATED RADIUS (FT)
A) 15' (MINIMUM)	15
B) 20'	20
C) 25'	25
D) 30' (INTERMIDIATE)	30
E) 40'	40
F) 50' (INTERMIDIATE)	50
G) 60'	60
H) 75' (MAXIMUM)	75

2. CHECK AND RECORD READING ON BOOM ANGLE / DEGREES.

SPECIFICATION	INDICATED BOOM ANGLE (DEGREES)
1). MAXIMUM. 81 DEGREES	81
2). INTERMEDIATE. 60 DEGREES	60
3). INTERMEDIATE. 45 DEGREES	45
4). MINIMUM. 0 DEGREES	0

3. READING ON LOAD INDICATOR WITHOUT SLINGS OR LOAD / LBS. (LOAD BLOCK + WIRE ROPE)

ACTUAL	INDICATOR READ FREE LOAD, (LBS)
1). MAXIMUM RADIUS 600 LBS.	600
2). MINIMUM RADIUS 600 LBS,	600

4. CHECK AND RECORD ENGINE HIGH IDLE SPEED / RPM.

SPECIFICATION	INDICATED OF FUNCTIONAL (RPM)
1). IDLE SPEED 850 RPM	850
2). LOW SPEED – RPM	–
3). HIGH SPEED 2200 RPM	2200

5. FUNTIONALLY TEST THE FOLLOWING.

ACTUAL	INDICATED OF FUNCTIONAL (TESTED)
A) MAIN HOIST ANTI -TWO BLOCK.	Function
B) AUXILIALY HOIST ANTI -TWO BLOCK.	Function
C) HIGH BOOM ANGLE KICK OUT.	–
D) LOW BOOM ANGLE KICK OUT.	–
E) PRIME MOVER SHUTDOWN.	Function
F) EMERGENCY SHUTDOWN.	Function
G) ROTATE CRANE 360 LEFT.	Smooth
H) ROTATE CRANE 360 RIGHT.	Smooth

6. RECORD HYDRAULIC RELIEF VALVE PRESSURE SETTING ON FOLLOWING HYDRAULIC FUNCTION:

SPECIFICATION	INDICATED PRESSURE (PSI)
A) MAIN HOIST 2900 PSI.	2900
B) AUXILIALY HOIST 2950 PSI.	2950
C) BOOM HOIST 3000 PSI.	3000

TEST CONDUCTED BY: [redacted] POSITION : } cr. mech.
CRANE OPERATOR : [redacted] POSITION :
COMMENTS : DATE :

Done by 2 Jun 2025

[redacted]

CRANE Mfg. : Nautilus
MODEL: 180B-80
SERIAL NUMBER :

LOCATION: BEWN

DATA BASE : PM JOB TASK CARD
WO: 1247512

Crew Size:
Estimated Hours:

SYSTEM	TASK		Specification	Record/Reading
Safety	Perform Job Safety Analysis (JSA)		Company Spec/Standard	✓) YES ( ) NO
	Obtain "COMPANY' PERMIT TO WORK		Company Spec/Standard	✓) YES ( ) NO
	Perform Tool Box Talk		Company Spec/Standard	✓) YES ( ) NO
	BEFORE/AFTER JOB EXECUTION: Ensure to comply with isolation procedure (LOCK OUT/TAG OUT, WARNING SIGNS and BARRIERS).		Company Spec/Standard	✓) YES ( ) NO
Required Tools	Insure proper tools are available at the job site		Company Spec/Standard	✓) YES ( ) NO
	Tool bag		Company Spec/Standard	✓) YES ( ) NO
	Tool box		Company Spec/Standard	✓) YES ( ) NO
	Tool Container		Company Spec/Standard	✓) YES ( ) NO
	MPI equipment and operator		Company Spec/Standard	( ) YES ✓) NO
	Check safety harness Software and Hardware should be good condition before use		Company Spec/Standard	✓) YES ( ) NO
	Check Rescue Equipment ready to use onsite		Company Spec/Standard	✓) YES ( ) NO
	Portable Scaffolding and Crew if require		Company Spec/Standard	✓) YES ( ) NO
Lubricants	Insure proper lubricants and consumables are available at the job site.		Company Spec/Standard	✓) YES ( ) NO
	Hydraulic System - Hydraulic Oil	Rando HD-68	OEM Manual	✓) YES ( ) NO
	Slew Gearbox - Gear Oil	Meropa 220	OEM Manual	✓) YES ( ) NO
	Auxiliary Hoist - Gear Oil	Meropa 220	OEM Manual	✓) YES ( ) NO
	Main Hoist - Gear Oil	Meropa 220	OEM Manual	✓) YES ( ) NO
	Grease Points - Lithium Based **IT MUST NOT INCLUDE MOLYBDENUM DISULPHIDE**	MULTIFAK EP82	OEM Manual	✓) YES ( ) NO
	Open Gear Teeth - Open Gear Lube highly water resistant and of an adhesive nature.	OMEGA 73	OEM Manual	✓) YES ( ) NO
	Wire rope Lubricant Company preferred grade	Birlube 70	OEM Manual	✓) YES ( ) NO
	Engine Oil - SAE Grade 15W-40 (Delo Gold)	15W-40	OEM Manual	✓) YES ( ) NO
	Safe Load Indicator fluid	W-15	OEM Manual	✓) YES ( ) NO
	Engine Radiator - Should have radiator preservatives additives	Cat® SCA	OEM Manual	✓) YES ( ) NO
Consumables	Spray Cold Galvanize		Company Spec/Standard	✓) YES ( ) NO
	Denso Tape		Company Spec/Standard	✓) YES ( ) NO
	WD-40		Company Spec/Standard	✓) YES ( ) NO
History Review	Before starting work, tasks preparation at least 1 day prior to starting work: 1. Review history PM/ CM from Roving Team, 2. Review last PM/ CM/ PMI from Crane Mech, 3. List out all punch list and prepare parts. 4. Review last Certificate task performed		API RP 2D	✓) YES ( ) NO
	Require to update part history from Crane Mech on following main compenents to ensure the right parts are prepared: - Aux/ Main/ Boom Cylinder, Engine, Swing Gearbox, etc. Reference: Crane OEM information of each part need to be recorded - Manufacturer & Contact info - Model & serial number - Installation date		Company Spec/Standard	✓) YES ( ) NO
	Review history data from Certificates and incorporate into current PM: - Pull Test Certificates (ongoing update, 4 yr. history). - Load Test Certificates (ongoing update, 4 yr. history). - Wire Rope Certifications (running rope and standing rope) (life of rope). - Hoist Certifications for hoist classified as "personnel handling" hoist.		API RP 2D	✓) YES ( ) NO
	Review Last Preventative Maintenance Records (Inspection Reports) - Pre-use (Pre-Post Inspection) - 6 Monthly (API RP 2D Not Defined, Company Standard) - 1 Yearly (API RP 2D Defined Annual Inspection)		API RP 2D	✓) YES ( ) NO
Lifting Gear Preparation	Visually Inspect (Sling, sling hooks and shackles) include Websling / Chain		Company Spec/Standard	✓) YES ( ) NO
	Check color code / Tag & date inspection		Company Spec/Standard	✓) YES ( ) NO
General	Determine if access route to-from crane is clean, safe, unobstructed and adequately protected against falls, tripping and slipping		Company Spec/Standard	✓) YES ( ) NO
	Check drain lines and drip pans for deterioration		API RP 2D	✓) YES ( ) NO
	Remove any sediment collected in the bottom of drip pans		Industry Standard	✓) YES ( ) NO
	Check for general crane and components for loss of protective coating and corrosion		Industry Standard	✓) YES ( ) NO
	Check for missing or loose ,corrosion, deformation pins, pin keepers, bolts, nuts, fasteners of all laders, cages and working platform		API RP 2D	✓) YES ( ) NO
	Apply grease to exposed grease parts (control valve spools, ball-ring gear, parking brake valve, etc.)		OEM Manual	✓) YES ( ) NO
Prime Mover	Engine Caterpillar		OEM Manual	✓) YES ( ) NO
	CATERPILLAR MODEL 3406	S/N.:	OEM Manual	6TR21980
		AR.No.:	OEM Manual	4W-3898
	Change engine lube oil & oil filter and check the condition of old oil. As found : Not Contaminants		OEM Manual	✓) YES ( ) NO
	Check diesel tank level, top up if required.		OEM Manual	✓) YES ( ) NO
	Check / Clean crankcase breather cap. Change if required		OEM Manual	✓) YES ( ) NO
	Check / Clean air cleaner filter, Replace if require. (Note : Include inspect air cleaner housing)		OEM Manual	✓) YES ( ) NO
	Check condition and inspect of the radiator and cap.		OEM Manual	✓) YES ( ) NO
	Check for any signs of leaks on or around the engine ie; Crankshaft seal for front & rear seal , Engine oil cooler. As found: Good		OEM Manual	✓) YES ( ) NO
	Check condition exhaust system for leaks, corrosion, insulation and general. As found : Good		OEM Manual	✓) YES ( ) NO
	Check condition of all engie hoses and tube. (Fuel supply,Cooling system and Lube oil system. As found: Good		OEM Manual	✓) YES ( ) NO
	Drain water and sediment form diesel tank. As found :		OEM Manual	✓) YES ( ) NO
	Check / Clean Diesel tank level sightglass and diesel tag.		OEM Manual	✓) YES ( ) NO
	Apply grease of fan bearing/shaft.		OEM Manual	✓) YES ( ) NO
	Check and inspect the vibration damper and pulley. As found : Good		OEM Manual	✓) YES ( ) NO
	Change water coolant and check condition base of water coolant and record PH.		OEM Manual	✓) YES ( ) NO
	COOLANT PARAMETERS (PH):	6 or higher	OEM Manual	PH = 7
	HOUR METER PARAMETERS:	LAST READING 7355 HRS	OEM Manual	7420 HRS
	Check and retigthen the bolts of all engine base. / Inspection mouting rubber. As found : Good		OEM Manual	✓) YES ( ) NO

[redacted] / 3 Mar 25.

SYSTEM	TASK			Specification	Record/Reading
	Inspect the engine fan blades that there is a break is it severely distorted or rusted. As found : Good			OEM Manual	(✓) YES ( ) NO
	Change and adjust the tension engine belts. Remark; To check belt Tension, after has engine run more than 30 minules apply 400 N (90 lbs) of force midway between the pulleys. Correctly adjusted belts with deflect 13 to 19 mm (1/2 to 3/4 inch).			OEM Manual	(✓) YES ( ) NO
	Check engine HYD starter drive gear bendix and fly wheel gear teeth condition and record. **Replace if required"			OEM Manual	(✓) YES ( ) NO Bendix Gear : 95 % Fly wheel Gear teeth : 80 %
	Check and inspect condition the Bendix of hydraulic Starter motor.			OEM Manual	(✓) YES ( ) NO
	Lubricate and check engine throttle system.			OEM Manual	(✓) YES ( ) NO
	Determine if the tachometer operates properly: Record Value of Idle & Max Speed (RPMs) Note: Too low Idle (RPMS) will cause excessive worn at winch brake			OEM Manual	
	ENGINE RPM SPECIFIC	IDLE SPEED	850-950 RPM	OEM Manual	950 RPM
		MAX SPEED	2200 RPM	OEM Manual	2200 RPM
	Confirm engine oil pressure as per Parameters below and Record Value:			OEM Manual	
	ENGINE OIL PRESSURE SPECIFIC	Minimum	Not lower then 30 PSI	OEM Manual	30 PSI
		Maximum	70 PSI	OEM Manual	70 PSI
	Confirm engine fuel pressure Parameters are correct and Record Value:			OEM Manual	
	ENGINE FUEL PRESSURE SPECIFIC** ***Note;Fuel pressure at high idle is lower than 105 kPa (15 psi)RAMETERS*	Normal	>35 PSI.	OEM Manual	(✓) YES ( ) NO
	Confirm engine temperature Parameters and Record Value:			OEM Manual	
	ENGINE WATER TEMP SPECIFIC	NORMAL	120 - 180 degrees F	OEM Manual	170 F
	Test engine SAFETY DEVICE- ensure engine kill cable shuts off FUEL supply			API RP 2D	(✓) Function ( ) False
	Test engine SAFETY DEVICE- ensure EMERGENCY KILL CABLE - shuts off AIR supply			API RP 2D	(✓) Function ( ) False
	Test engine SAFETY DEVICE- ensure ENGINE low lube oil - releases OIL PRESSURE to activate shuts off engine ****Note***~~Engine oil pressure low alarm at 20 PSI.~~*			Company Spec/Standard	(✓) Function ( ) False
	Test engine SAFETY DEVICE- ensure HIGH TEMP - releases OIL PRESSURE to activate shuts off engine			Company Spec/Standard	(✓) Function ( ) False
	Change water separator filter.			OEM Manual	(✓) YES ( ) NO
	Check the general conditionand functioning of turbocharger. Note;			OEM Manual	( ) Leak (✓) Not Leak
	Change fuel filter and inspect the primary hand pump.			OEM Manual	(✓) YES ( ) NO
	Check general condition the Governor and control linkage. (Inspect the throtle linkage)			OEM Manual	(✓) YES ( ) NO
	Check or adjust the engine valve lash and bridge valve. (Intake vale = 0.015", Exhaust valve = 0.030")			OEM Manual	(✓) YES ( ) NO
	Check condition wear of pump drive spline and record ***Note; Remaining 70% of Original Spline Surface must be replace.*			Company Spec/Standard	80 % Remaining
	Check condition wear of adaptor Coulping spline shaft and record ***Note; Remaining 70% of Original adaptor Coulping spline shaft Surface must be replace.*			Company Spec/Standard	80 % Remaining
	Check condition wear of Coulping spline and record. Re-tigthen of all lock bolts. ***Note; Remaining 70% of Original adaptor Coulping spline shaft Surface must be replace.*			Company Spec/Standard	90 % Remaining
Hydraulic Start System (Apply for C2-Remote P/F Only)	Check pressure system at the pressure gauge which should reach 3,000 PSI as standard when the system is FULLY charged. Record Value. (As the system cools down, the pressure should drop slightly and finally stabilised.)			OEM Manual	(✓) YES ( ) NO
	Visually inspect all hydraulic connections and hoses for leaks and retighten if necessary. (Caution: This should NOT be done if the system is under pressure.) 1. Slowly release system pressure by loosening the bleed screw on top of the hand pump. 2. Ensure no pressure remains, retighten the suspected leak fitting or replace the damaged hose or component. 3. Retighten the bleed screw on the hand pump. 4. Pump the system up to 2200 - 2600 PSI 5. Inspect that the leak was eliminated.			OEM Manual	(✓) YES ( ) NO
	Function check Accumulator Pre-charge. (Caution: This should NOT be done if the system is under pressure.) 1. Shut the engine off, release system pressure via the bleed screw on top of the hand pump 2. Retighten bleed screw and actuate the hand pump. The pressure will rapidly increase and then stabilised. This pressure is related to accumulator gas pre-charge pressure. 4. If the pressure rapidly increase to 3000 PSI, it indicates that the accumulator has lost its gas charge. 5. Troubleshoot as necessary			OEM Manual	(✓) YES ( ) NO
	Check function rechaging system by function boom down while the engine running. 1. The crane engine is running at 1,000-1500 RPM. 2. Slowly control lever boom function down for charging pressure to accumulator. 3. This pressure should read on prssure gauge between 2200 - 2600 PSI depending on the recharge ratio 80% std. (90% optional). Record Pressure Value.			OEM Manual	2600 PSI
	Check Nitrogen pressure in Accumulator ***Note**spec @ 1,500 psi as follow schematic and if found pressure loss below 1400 PSI then prepare recharge nitrogen in system			OEM Manual	1500 PSI
Hoist / Brakes	Visually check a hoist exhibits erratic operation and/or unusual noise, the hoist must be taken out of service until it is inspected and serviced by a qualified technician. Continued operation of a hoist with a defect in a critical component may lead to loss of load control, property damage, serious injury or death.			OEM Manual	(✓) YES ( ) NO
	Visual exteriors of hoist, frames, drums and flanges for damage, leaks, cracks and wear and repair/replace as required to maintain the structural integrity of the hoist.			OEM Manual	(✓) YES ( ) NO
	Check all hoist mounting pins, bolts or other fasteners and replace or tighten as necessary.			OEM Manual	(✓) YES ( ) NO
	Lubricant level must be maintained between the minimum and maximum levels; midway up sight glass or at bottom of level plug port as equipped and check/clean plug vent. Use only the recommended type of lubricant.			OEM Manual	(✓) YES ( ) NO
	Inspect Brake Valve Opening Pressure test V/V 1-1/4" PD Series : no lower than 550 PSI V/V 1-1/2" CH Series : no lower than 575 PSI	Main		Braden Bulletin 527-Dec,1996	600 PSI
		Aux			600 PSI
	Inspect Brake cylinder opening pressure test. CH/PD Series : 400-450 PSI.	Main		Industry Standard	400 PSI
		Aux			400 PSI
	Measure differancian of static and dynamic brake. CH/PD Series : 150-250 PSI.	Main		Industry Standard	200 PSI
		Aux			200 PSI
	Check for external oil leaks and repair as necessary. This is extremely important due to the accelerated wear that will result from insufficient lubricating oil in the hoist.			OEM Manual	(✓) YES ( ) NO
	RECORD BOOM CYLINDER INFORMATION :	Boom cylinder Diameter:		OEM Manual	DIA: 12 Inch
		CY Number:		OEM Manual	L=6169-A3 R=6169-A4
		Serial Number:		OEM Manual	L=5467 R=5468
	RECORD MAIN HOIST INFORMATION :	Manufacturer:		OEM Manual	Braden
		Model:		OEM Manual	CH210A-36140-07-1
		Serial Number:		OEM Manual	0300501
	Check MAIN HOIST for proper operation and good condition			API RP 2D	(✓) YES ( ) NO

[redacted] / 3 Mar 25

SYSTEM	TASK			Specification	Record/Reading
	Brake test & record pressure of MAIN HOIST.			OEM Manual	✓ YES ( ) NO As found ON Standard
	Change main hoist gear oil and inspect for small particles in the old oil. ** Refer to Onsite Gear Oil Sample Procedure ** ** Replace and send oil sample to SKL if abnormal ** ** Take photo of Oil Sampling for Reference**			OEM Manual	✓ YES ( ) NO As found On Standard
	RECORD AUXILIARY HOIST INFORMATION :		Manufacturer:	OEM Manual	Braden
			Model:	OEM Manual	CH 15DA-7310-01-1
			Serial Number:	OEM Manual	0500783
	Check AUXILIARY HOIST for proper operation and good condition			API RP 2D	✓ YES ( ) NO
	Brake test & record pressure of AUXILIARY HOIST			API RP 2D	✓ YES ( ) NO
	Change Aux. hoist gear oil and inspect for small particles in the old oil. ** Refer to Onsite Gear Oil Sample Procedure ** ** Replace and send oil sample to SKL if abnormal ** ** Take photo of Oil Sampling for Reference** Please record if any abnormal condition. Note.....			OEM Manual	( ) SEND SKL LAB ✓ NOT SEND SKL LAB
	Check pressre relief Valve: Determine hoistes' relief valve pressure gauge is working and giving accurate measurement by notice whether pressure gauge is vibrating or not. If not, set relief valve pressure in accordance with the schematic and parameters below. Record all readings.			OEM Manual	✓ YES ( ) NO
	BOOM RELIEF VALVE TEST	Relief Specific:	3,000 PSI	OEM Manual	3000 PSI
	MAIN HOIST RELIEF VALVE TEST	Relief Specific:	2,575 PSI	OEM Manual	2575 PSI
	AUX HOIST RELIEF VALVE TEST	Relief Specific:	2,800 PSI	OEM Manual	2800 PSI
	SWING RELIEF VALVE TEST	Relief Specific:	1,500 PSI	OEM Manual	1500 PSI
	Measure Pressure of hoist motor case drains and Record Value Reference Bulletin: BRADEN Inspection, Testing, Preventive Maintenance and Special Operating Instructions For Planetary Hoists PB-308 latest edition for further details.			OEM Manual	
	MAIN HOIST CASE DRAIN for Gear Motor (Down Mode).	PRESSURE	< 100 psi	Company Spec/Standard	10 PSI
	AUX. HOIST CASE DRAIN for Gear Motor (Down Mode).	PRESSURE	< 100 psi	Company Spec/Standard	25 PSI
Hydraulic System	Check hydraulic tank oil level. Oil should be visible in the sight glass. Top up as required (3/4 Tank Minimum)			OEM Manual	( ) YES ( ) NO
	Check hydraulic oil condition. (Check if running hours are more than 100 hours from last oil change or during Annual inspection) ** Refer to Onsite Hydraulic Oil Sample Procedure ** ** Replace and send oil sample to SKL if abnormal ** ** Take photo of Oil Sampling for Reference**		Rando HD-68	Company Spec/Standard	( ) SEND SKL LAB ✓ NOT SEND SKL LAB
	Drain off 1 liter of oil to remove condensed water. If water is present, drain until water is removed and top up with clean oil			Industry Standard	✓ YES ( ) NO
	Check for any hydraulic leaks			Industry Standard	✓ YES ( ) NO
	Check the hydraulic hose, piping and tubing for mechanical damage, corrosion, splits, blisters, cracking or excessive abrasion on the outer surface			API RP 2D	✓ YES ( ) NO
	Check that all hydraulic hose connections are sound and that all mounting and pivoting connections are secure.			Industry Standard	✓ YES ( ) NO
	Lubricate hydraulic swivel in pedestal and insure tie down restrains are in place and preventing the swivel from rotating with the crane structure.			OEM Manual	✓ YES ( ) NO
	Ensure the filler breather on tank is not covered or clogged			Industry Standard	✓ YES ( ) NO
	Visually inspect for missing or loose pins, pin keepers, bolts, nuts, fasteners on all pumps, motors and valves			API RP 2D	✓ YES ( ) NO
	* Re-tighten the stud bolt of hydraulic main pump and marking the nut for checking to prevent loosening. Note : Torqe spec model P76, P75, PGP/PGM350 ,PGP/PGM330 = 200 ft-lbs. , for model PGP/PGM315 = 140 ft-lbs. and PGP/PGM365 = 450 ft-lbs.			The Commercial Intertech manual	✓ YES ( ) NO
	Check the filter bypass indicator, while engine is running			OEM Manual	✓ YES ( ) NO
	With engine running (after all other items pass inspection), check the system for leaks around fittings, hoses, valves and reservoirs			Industry Standard	✓ YES ( ) NO
	With engine running, check the source of any unusual noise or vibration that may cause or indicate equipment damage or wear			Industry Standard	✓ YES ( ) NO
	Ensure all hoses are properly rated for the system, see "Parameters" for each system for details.			Industry Standard	✓ YES ( ) NO
	Record hydraulic oil operating temperture. Note: Hydraulic fluid overheating temperature is over 180 F degrees or 82 C, degrees (reservoir temperature)			Industry Standard	130 Degree F
	Determine if hydraulic return pressure gauge is working and giving accurate measurements. Record readings				
	RECORD HYDRAULIC RETURN PRESSURE PARAMETERS:		60 PSI "maximum"	OEM Manual	10 PSI
	Check and inspect the hydraulic return filters and seals.			OEM Manual	( ) YES ( ) NO
	Function Testing and record pressures with engine at :		2,200 RPM	API RP 2D	
	BOOM FUNCTION TEST (Need Crane Mech to verify each platform)			OEM Manual	
	Boom Angle : 60 Degree (Recommend or as applicable) — UP	Cracking pressure	RECORD	OEM Manual	900 PSI
		Full Speed Pressure	RECORD	OEM Manual	1100 PSI
	DOWN	Cracking pressure	RECORD	OEM Manual	1000 PSI
		Full Speed Pressure	RECORD	OEM Manual	1600 PSI
	MAIN HOIST FUNCTION TEST (Need Crane Mech to verify each platform)			OEM Manual	
	Boom Angle : 60 Degree (Recommend or as applicable) — UP	Cracking pressure	RECORD	OEM Manual	200 PSI
		Full Speed Pressure	RECORD	OEM Manual	700 PSI
	DOWN	Cracking pressure	RECORD	OEM Manual	700 PSI
		Full Speed Pressure	RECORD	OEM Manual	1400 PSI
	AUX HOIST FUNCTION TEST (Need Crane Mech to verify each platform)			OEM Manual	
	Boom Angle : 60 Degree (Recommend or as applicable) — UP	Cracking pressure	RECORD	OEM Manual	200 PSI
		Full Speed Pressure	RECORD	OEM Manual	600 PSI
	DOWN	Cracking pressure	RECORD	OEM Manual	600 PSI
		Full Speed Pressure	RECORD	OEM Manual	1200 PSI
	SWING FUNCTION TEST (Need Crane Mech to verify each platform)			OEM Manual	
		Cracking pressure	RECORD	OEM Manual	200 PSI

[redacted] / 3 Mar 25

SYSTEM	TASK				Specification	Record/Reading
	Boom Angle : 60 Degree (Recommend or as applicable)	LEFT	Full Speed Pressure	RECORD	OEM Manual	500 PSI
		RIGHT	Cracking pressure	RECORD	OEM Manual	200 PSI
			Full Speed Pressure	RECORD	OEM Manual	500 PSI
Electrical system, Crane Boom Lighting and red obstruction light	Check the electrical junction boxes, wires and connections for deterioration, desiccant bags, (replace as required)				Industry Standard	(✓) YES ( ) NO
	Check the condition of the grounding and lighting protection system.				Company Spec/Standard	(✓) YES ( ) NO
	Visually inspect boom floodlight and light guards for loose, missing, corroded				Company Spec/Standard	(✓) YES ( ) NO
	Check condition pipe support , U-bolt ,nuts of boom floodlight and Electric slipring for loose , missing , corroded				Company Spec/Standard	(✓) YES ( ) NO
	Check Electric slipring/swivel for 360° continuous rotation				OEM Munnal	(✓) YES ( ) NO
	Check Water ingress, condensation in electric slipring, red obstruction light and boom floodlight				OEM Munnal	(✓) YES ( ) NO
	Check feely movement and lubricate of boom floodlight				OEM Munnal	(✓) YES ( ) NO
	With generator in operation, intergize all lights to unsure proper function.				API RP 2D	(✓) YES ( ) NO
	Check condition of crane boom lighting and safety net is secured with strong point. * **Safety net should be replace 24 months after installation (2 year)***			Last installation date _____	Company Spec/Standard	(✓) YES ( ) NO
	Check function of crane sound signal				Company Spec/Standard	( ) YES ( ) NO (✓) N/A
	Check function of crane boom lighting at boom upper section				Company Spec/Standard	(✓) YES ( ) NO ( ) N/A
	Check function of crane boom lighting at boom lower section				Company Spec/Standard	(✓) YES ( ) NO ( ) N/A
	Check function of crane boom lighting at winch skid				Company Spec/Standard	(✓) YES ( ) NO ( ) N/A
	Check function of crane boom lighting at crane cabin				Company Spec/Standard	(✓) YES ( ) NO ( ) N/A
	Check function becon light at boom tip				Company Spec/Standard	(✓) YES ( ) NO ( ) N/A
	Inspection wire rope guide & Roller assembly				Company Spec/Standard	(✓) YES ( ) NO
	Visually inspect red obstruction light pipe support, u-bolts, nuts connection to hand rail for loose, missing, corroded				Company Spec/Standard	(✓) YES ( ) NO
	Visually inspect safety sling attached to the red obsruction light and its base for loose, missing, corroded				Company Spec/Standard	(✓) YES ( ) NO
	Visually inspect red obstruction light function. The light is designed to turn on all the time.				Company Spec/Standard	(✓) YES ( ) NO
Operator Control Station	Check general condition of control panel, bolts, paint security, etc.				API RP 2D	(✓) YES ( ) NO
	Determine if there is a serviceable fire extinguisher in the vicinity of the crane				Company Spec/Standard	(✓) YES ( ) NO
	Determine if correct load chart is in use and easily visible for operator				API RP 2D	(✓) YES ( ) NO
	Determine if charts, indicators and hand signal chart are in the cabling and firmly attached				API RP 2D	(✓) YES ( ) NO
	Determine if angle/radius indicator plate is easily visible to operator and is moving freely.				API RP 2D	(✓) YES ( ) NO
	Check condition of control levers and determine if they "dead-man" back to the neutral position.				API RP 2D	(✓) YES ( ) NO
	Check condition of pressure gauges.				API RP 2D	(✓) YES ( ) NO
	Check proper control labels are firmly installed, completely legible and properly labeled				API RP 2D	(✓) YES ( ) NO
	Check controls for freedom-of-movement				API RP 2D	(✓) YES ( ) NO
	Check condition , Leak, freely moement of Dynamic swing break system *** Note; If HYD Oil loose in CYD reservoir must be refill*				OEM Manual	(✓) YES ( ) NO
	Check condition , Leak, freely moement of Accelerate System *** Note; If HYD Oil loose in CYD reservoir must be refill*				OEM Manual	(✓) YES ( ) NO
	Check all safety glass and rubber seal for proper condition				API RP 2D	(✓) YES ( ) NO ( ) N/A
	Function Test Horn. Note;.....				Industry Standard	( ) YES ( ) NO (✓) N/A
	Ensure PRE/POST Check List and Pocket Manual in the cabin. Note;.....				Company Standard	(✓) YES ( ) NO ( ) N/A
Load Indicator System	Visual check on fittings and connections for leaks. Fix leak if any. Note: Good.....				OEM Manual	(✓) YES ( ) NO
	Should any leaks exist, stop leak and recharge system, refer to maintenance manual				OEM Manual	(✓) YES ( ) NO
	Change and flushing Load cell fluid.				OEM Manual	(✓) YES ( ) NO
	Check general condition of tubbing, hoses, pins bolts, paint, etc.				Industry Standard	(✓) YES ( ) NO
	Insure load cell is free of obstructions				OEM Manual	(✓) YES ( ) NO
	Check condition of gauge(s) face and clean glass as required.				OEM Manual	(✓) YES ( ) NO
	Check the scale's operation and weighing accuracy. (Main Hoist) Remark : Maximum variance +/- 2% Note: On Standard				Company Spec/Standard	(✓) YES ( ) NO ( ) N/A
	Check the scale's operation and weighing accuracy. (Aux. Hoist) Remark : Maximum variance +/- 2% Note: On Standard				Company Spec/Standard	(✓) YES ( ) NO ( ) N/A
	Check the internal casting fluid of weight indicator. top up if required				Industry Standard	(✓) YES ( ) NO ( ) N/A
	Insure SWL tag matches ratings on the Crane Load Chart.				OEM Manual	(✓) YES ( ) NO ( ) N/A
	Insure Boom Length, matches the Crane Load Chart				OEM Manual	(✓) YES ( ) NO ( ) N/A
	Insure Boom Angle measurements and readings match the boom angle indicator.				OEM Manual	(✓) YES ( ) NO ( ) N/A
	Insure Boom Radius measurements indicate the distance from center line of the crane to the hook				OEM Manual	(✓) YES ( ) NO ( ) N/A
	Check Main load cell gap 1/4 (0.250) inch				OEM Manual	(✓) YES ( ) NO ( ) N/A
	Check Aux load cell gap 3/8(0.380) inch (Compression Load Cell Type)				OEM Manual	(✓) YES ( ) NO ( ) N/A
Pedestal & Structure	Visually check Pedestal for chipped/cracked paint, deformation, worn parts, dents, corroded areas, cracks weld, etc.				API RP 2D	(✓) YES ( ) NO
	Check water rain drain at pedestal must be not obstuct				Industry Standard	(✓) YES ( ) NO
	Check pin and cotter pin of pedestal missing , corrosion, wear, damage and exercise pin.				Industry Standard	(✓) YES ( ) NO
	Visually check Base - Plate connection and Base hoist Structure for chipped/cracked paint, deformation, worn parts, dents, corroded areas, cracks weld, etc.				API RP 2D	(✓) YES ( ) NO
	Check A fixed such as Handrial, Walkway, Grating, stationary structure without significant movement in response to waves and currents in normal operating conditions.				API RP 2C	(✓) YES ( ) NO
	Visually check and lubricate maintenance Jib. ***Note*** If on pedestal crane				OEM Manual	(✓) YES ( ) NO ( ) N/A
	Check maintenance jib is secure firmly. ***Note*** If on pedestal crane				OEM Manual	(✓) YES ( ) NO ( ) N/A
Box Boom & Luffing CYD	Check and Verify entire box boom and Boom CYD for loss of protective coating and corrosion. Note;.....Good.....				API RP 2D	(✓) YES ( ) NO
	Check and Verify entire box boom and Boom CYD for chipped/cracked paint, deformation, worn parts, dents, corroded areas, cracks, etc. Note;.....Good.....				API RP 2D	(✓) YES ( ) NO
	Check and Verify boom end connections, for bends, dents, corroded areas, cracked welds, and signs of mechanical damage, wear, etc. **any deviation should be reported**				API RP 2D	(✓) YES ( ) NO
	Check and Verify boom rest and wooden support to ensure it's in good condition				API RP 2D	(✓) YES ( ) NO
	Inspect pin and pin holes of Upper tank and Lower tank for excessive clearance				OEM Manual	(✓) YES ( ) NO
	BOOM CYLINDER PIN MAXIMUM TOLERANCE		0.125 Inch (3mm)		Industry Standard	As found.....
	Check BOOM CYLINDERS for proper operation and good condition				API RP 2D	(✓) YES ( ) NO
	Check Boom cylinder barrels and rods for leaks, mechanical damage and corrosion				Industry Standard	(✓) YES ( ) NO

[redacted] / 3 Mar 25

SYSTEM	TASK	Specification	Record/Reading
	Check and measurement boom foot pin and connection pins for clearance	Industry Standard	
	BOOM FOOT PINS & BOOM BOX CONNECTER PIN TOLERANCE — 0.125 inch (3mm)	Industry Standard	
	Boom Foot Pin Tolerance	Industry Standard	0.018 inch
	Boom Box Connecter Pin Tolerance	Industry Standard	0.012 inch
	Check connecting bolts of box boom loose, corrosion, wear, damage	OEM Manual	(✓) YES ( ) NO
	Lubricate boom foot pins and bushings	OEM Manual	(✓) YES ( ) NO
	Lubricate boom cylinder pins, bearings and bushings	OEM Manual	(✓) YES ( ) NO
	Boom function test angle/radius to correction **Note; The cylinder(s) mechanism shall be capable of elevating the boom from a minimum of zero degrees to the maximum recommended boom angle.	API RP 2C	(✓) YES ( ) NO
	Operation functional test and verify Boom Creeping down **Note ; Test at angle 60 °	Industry Standard	(✓) YES ( ) NO As found Good
Wire Rope	Determine if parts-of-line match parts of line on the load chart in the crane cabin.	API RP 2D	(✓) YES ( ) NO
	Determine if visible portion of wire rope adequately lubricated. If not lubricate wire rope	API RP 2D	(✓) YES ( ) NO
	For each layer of wire rope on drum, check that all rope is parallel and each crossover point at hoist flanges is correct	API RP 2D	(✓) YES ( ) NO
	The top layer of rope must not be lower to the flange tips 2.5 in for Smooth drum,2 in for groove drum or 2.5 times of wire rope diameter	API RP 2C	(✓) YES ( ) NO
	Inspect wire rope for, kinking, crushing, broken wires, necking down of rope diameter, worn outside wires, corroded or broken wires at end connection, cutting or unstringing.	API RP 2D	(✓) YES ( ) NO As found Good
	NoteRunning Ropes of rotation-resistant construction used in the main or auxiliary Hoist: - Four (4) Randomly distributed broken wires within 30 rope diameter - Two (2) broken wires in one stand within 6 rope diameter	API RP2D Edition 7	(✓) YES ( ) NO As found Good
	One valley break can indicate internal rope damage requiring close inspection of this section of the rope. When one or more valley breaks are found in one lay length the rope should be retired.	API RP2D Edition 7	(✓) YES ( ) NO As found Good
	Reductions for the rope diameter, from initial wire rope dimensional measurements, in a nonworking area (an area away from the sheaves) compared to the lowest diameter of rope measured in three working areas (areas where the rope regularly goes over a sheave) of more than the following is observed: — 3/64 in. (0.047 in.) (1.2 mm) for diameters up to and including 3/4 in. (19.1 mm); — 1/16 in. (0.062 in.) (1.6 mm) for diameters of 7/8 in. to 1-1/8 in. (22.2 mm to 28.6 mm); — 3/32 in. (0.093 in.) (0.8 mm) for diameter of 1-1/4 in. to 1-1/2 in. (31.8 mm to 38.1 mm); — For rope diameters greater than 1-1/2 in., a 5 % diameter loss from baseline measurement. —Wear of one-third the original diameter of the outside individual wires.	API RP2D Edition 7	(✓) YES ( ) NO As found dimension Good
	Increase in the length of an individual rope lay is observed. This increase in lay length and accompanying reduction in diameter can be caused by failure of the core. This can occur more readily in ropes or rotation-resistant construction.	API RP2D Edition 7	(✓) YES ( ) NO As found Good
	-Inspection and Verify running and standing rope from heat effect **Note; Not more than 250°C -There is evidence of heat damage from any source (i.e. engine exhaust, flare towers, stress corrosion cracking, etc.). Heat can be generated by passing a rope over a frozen or non-turning sheave, contact with structural members of the crane, improperly grounded welding leads or lightning strikes	Industry Standard	(✓) YES ( ) NO As found Good
	With the boom at the highest possible angle and the main load block or overhaul ball at the water level, ensure there is a minimum of 5 wraps of wire-rope remaining on the drums. Note: (Thai law, requires minimum of 2 wraps)	API SPEC 2C / Thai Law	(✓) YES ( ) NO
	Reference: · Running rope safety factor not less than 6 for wire rope that are running wire, (Thai law; Wire rope nominal breaking strength x number parts of line / Design factor 6) · Standing rope safety factor not less than 3.5 for wire rope that are stay cables, (Thai law)	Thai Law	(✓) YES ( ) NO ( ) N/A
	Measure and record nominal diameter of "running ropes"main and auxiliary (particularly on drum, equalizer sheave and at sockets, clips and dead end points) *****Nominal = several measurements added together divided by Number of measurements*****	API RP 2D	(✓) YES ( ) NO
	Inspect wire rope and record dimension.	API RP 2D	
	MAIN WIRE ROPE OD: — FULL DRUM	OEM Manual	0.770 inch
	MAIN WIRE ROPE OD: — HALF DRUM	OEM Manual	0.773 inch
	MAIN WIRE ROPE OD: — WATER LEVEL	OEM Manual	0.775 inch
	AUX WIRE ROPE OD: — FULL DRUM	OEM Manual	0.770 inch
	AUX WIRE ROPE OD: — HALF DRUM	OEM Manual	0.769 inch
	AUX WIRE ROPE OD: — WATER LEVEL	OEM Manual	0.772 inch
	Slip-Cut 1 meter of all ropes at the wedge socket and re-wedge to prevent rust inside of wedge socket (at outward end of rope, not on hoist drum) Dead end tail length is never less than 6 inches, or: - Standard 6 to 8 Strand wire rope is not less than 7 times the rope diameter - Rotation Resistant Wire Rope is not less than 20 times the rope diameter	Company Spec/Standard	(✓) YES ( ) NO
	U-bolt and Fist Grip Clips: Extreme care should be exercised to assure proper orientation of U-bolt clips. The U-bolt segment shall be in contact with the wire rope dead-end. The orientation, spacing, torquing, and number of all clips shall be in accordance with the crane manufacture's specifications.	API SPEC 2C	(✓) YES ( ) NO
	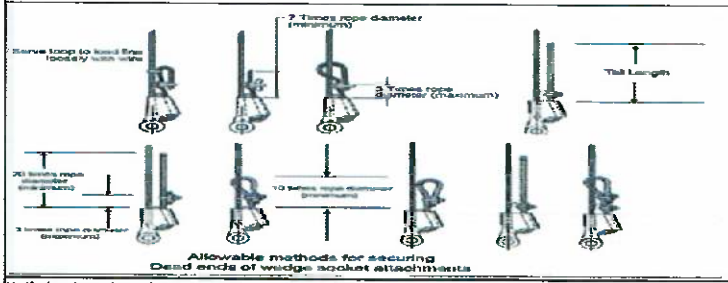	API SPEC 2C	Model ans Size wedge socket. Main hoist. Model..... Size.....3 1/4..... Aux.Hoist. Model..... Size.....3 1/4.....
	Verify that the wedge socket and wedge are the correct size for the rope in use and record the size	API SPEC 2C	(✓) YES ( ) NO
Sheaves & Bearings	Lubricate all sheave bearings.	API RP 2D	(✓) YES ( ) NO
	Visually inspect all sheaves and bushings for cracks, wear and deterioration	API RP 2D	( ) YES (✓) NO As found Good
	Visually inspect wire rope track of sheave for rope imprints, wear and deterioration. If damage exist sheave should be resurfaced or replaced.	API RP 2D	(✓) YES ( ) NO As found Good
	Pins retained by snap rings, bolt lock shafts, plates lock should be checked for missing or loose for all	API RP 2D	( ) YES ( ) NO

[redacted] / 3 Mar 25

SYSTEM	TASK	Specification	Record/Reading
	Check wirerope guards and keepers for proper location and condition.	API RP 2D	(✓) YES ( ) NO
	Determine if wire rope is jumping the sheaves, by looking for signs of damage on the sheave brim	Industry Standard	(✓) YES ( ) NO
	Sheave Rope Profile for optimum Rope life the sheave groove profile should be correctly matched to the rope diameter	Industry Standard	(✓) YES ( ) NO
	Check rope sheave should be machine grooved to adepth of not less than 1.5 times the norminal diameter of the rope	Industry Standard	(✓) YES ( ) NO
	MAIN POINT SHEAVES: Note; Good	Industry Standard	No.1 (✓) YES ( ) NO No.2 (✓) YES ( ) NO
	AUX SHEAVES: Note; Good	Industry Standard	No.1 (✓) YES ( ) NO
	IDLER SHEAVES: Note; Good	Industry Standard	AUX. (✓) YES ( ) NO Main ( ) YES ( ) NO
	Pins for bronze bushing and straight roller bearing should have a running clearnace of .031 inch/ sheave of end play and should be adjusted accordingly.(count from left)	Industry Standard	(✓) YES ( ) NO
	MAIN POINT SHEAVES:	Industry Standard	Sheave No.1 0.010 .... inch Sheave No.2 0.010 .... inch
	AUX SHEAVES:	Industry Standard	Sheave No.1 0.013 .... inch
	IDLER SHEAVES:	Industry Standard	Sheave AUX. 0.009 .... inch. Sheave Main 0.009 .... inch.
	Ensure the sheaves are aligned and the fleet angle is correct **Remark ; Wire rope User's Manual allows 2 degree on grooved winch drum, Smooth Drum shuold be not more than 1-1/2 degree	API RP 2D	(✓) YES ( ) NO
	Determine if wire rope size and sheave sizes/grooves are compatible and record size. Sheave pitch diameter (D) to nominal wire rope diameter (d) ratio (D/d) shall not be less than 18:1	API SPEC 2C	(✓) YES ( ) NO
	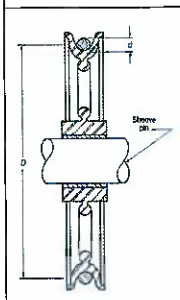 MAIN POINT SHEAVES: — SHEAVE D / WIRE ROPE d = >18	API SPEC 2C	18 inch (D) 3/4 inch (d) 24 (Ratio D/d)
	AUX SHEAVES: — SHEAVE D / WIRE ROPE d = >18	API SPEC 2C	14 inch (D) 3/4 inch (d) 17 (Ratio D/d)
	IDLER SHEAVES: — SHEAVE D / WIRE ROPE d = > 18 (If applicable)	API SPEC 2C	18 inch (D) 3/4 inch (d) 24 (Ratio D/d)
	MAIN BLOCK SHEAVES: — SHEAVE D / WIRE ROPE d = > 16	API SPEC 2C	16 inch (D) 3/4 inch (d) 21 (Ratio D/d)
Load Block	Load Block: Check the load block for cleanliness, binding sheaves, damaged or worn sheaves, worn or distorted sheave pins, broken bolts, and worn cheek weights. Note ;	Industry Standard	(✓) YES ( ) NO As found Good
	Hook: Check the hook damage, excessive wear to the hook safety latch, hook swivel trunnions, thrust collar, securing, damage or missing lubrication fittings, proper lubrication, cracks and gouges, and if visibly bent or twisted or has been exposed to welding or arching. Note ;	Industry Standard	(✓) YES ( ) NO As found Good
	Hook: Tip has been bent more than 10 degree out of plane from the hook body	Industry Standard/API RP2D7	( ) YES (✓) NO As found Good
	Inspect the Pins for bronze bushing and straight roller bearing should have a running clearnace of .031 inch/ sheave of end play and should be adjusted accordingly	Industry Standard	(✓) YES ( ) NO
	Inspect Hook or shackle to swivel case clearance is set at .031 to .062 inch, Clearance exceeding .12 to .18 (ONLY CROSBY BRAND)	OEM Crosby	(✓) YES ( ) NO
	OEM STANDARD RECOMMEND that Crane block removal from service untill replaced and repair following below	OEM STANDARD	
	- Elongated center pin and hook trunnion holes exceeding 5% of Original diameter	OEM STANDARD	( ) YES (✓) NO As found Good
	-Material loss due to wear exceeding 10% of original section	OEM STANDARD	( ) YES (✓) NO As found Good
	-Sheave wire rop groove diameter smaller than 2.5%	OEM STANDARD	(✓) YES ( ) NO As found Good
	Loosened tie bolts nuts, center pin round nuts, check weight cap screws and hook nut cap screws. Tie bolt nuts to be torqued to 35-40 ft.Lbs and restaked, all other fasteners wrench tight	OEM STANDARD	(✓) YES ( ) NO
	Throat opening - any distortion causeing an increase in throat opening of 5% not ot exceed 1/4 in. (6 mm.)(or as recommended by the manufacturer)	ASME B30.10	(✓) YES ( ) NO
	Inspect rope track worn in sheave groove, sheave must be resurface or replace	API RP 2D	(✓) YES ( ) NO
	Ensure the load block is not using "Cast Iron" cheek weights they can not be used as per API	API SPEC 2C	(✓) YES ( ) NO As found Good
	Determine if all hooks are equipped with properly operating safety latches and check for proper functioning	API RP 2D	(✓) YES ( ) NO
	Lubricate sheave bearings and swivels	OEM Manual	(✓) YES ( ) NO
	Re-thighten nut firmly to point at which trunion will just rotate, the Re-tighten set-screw in nut and thread condition as in the picture below,	Industry Standard	(✓) YES ( ) NO
	Last NDE inspection record	Industry Standard	Last Inspect date_____
	RECORD LOAD BLOCK INFORMATION : — Manufacturer:	OEM Manual	MCKISSICK
	Model:	OEM Manual	M035 016 EH
	Serial Number:	OEM Manual	0364215
	Record Load block measurements and details for future comparison with historical data ☒	Industry Standard	(✓) YES ( ) NO

[redacted] / 3 Mar 25

SYSTEM	TASK		Specification	Record/Reading
	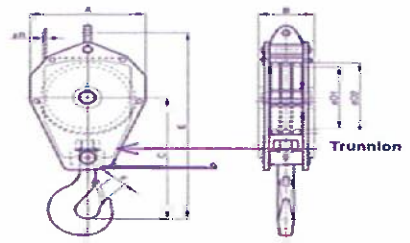	A - Block OD	Industry Standard	14 1/2 mm/ inch
		B - Block length	Industry Standard	39 mm/ inch
		C - Center of Pin to hook Saddle	Industry Standard	32 1/2 mm/ inch
		D1 - Sheave Diameter	Industry Standard	16 mm/ inch
		E - Block Width	Industry Standard	16 1/2 mm/ inch
		F - Throat Opening	Industry Standard	7 mm/ inch
		G - Trunnion	Industry Standard	0.040 mm/ inch
Auxiliary Ball	Inspect Auxiliary ball for cleanliness, binding swivel, work pad-eye hole. Inspect the hook damage, excessive wear to the hook safety latch, Bent connector plates,Severe corrosion pitting, hook swivel trunnions, thrust collar, securing, damage or missing lubrication fittings,Loose, missing or damaged retaining nuts, cotter pins or swivel set screws ,Missing or illegible rating and warning tags, proper lubrication, cracks and gouges, and if visibly bent or twisted or has been exposed to welding or arching.		Industry Standard	(✓) YES ( ) NO
	Hook: Tip has been bent more than 10 degree out of plane from the hook body		Industry Standard/API RP2D7	(✓) YES ( ) NO
	OEM STANDARD recommend that Crane overhaul ball removal from service untill replaced and repair following below		OEM STANDARD	
	- Elongated ball pin holes, hook latch pin holes and swivel eye exceeding 5% of original diameter,		OEM STANDARD	(✓) YES ( ) NO As found Good
	-Swivel end play gap exceeding .08". Excessive end play indicates damaged internal set screw		OEM STANDARD	(✓) YES ( ) NO As found Good
	-Material loss due to wear exceeding 10% of original section		OEM STANDARD	(✓) YES ( ) NO As found Good
	Throat opening - any distortion causeing an increase in throat opening of 5% not ot exceed 1/4 in. (6 mm.)(or as recommended by the manufacturer)		ASME B30.10	(✓) YES ( ) NO
	All hooks that lift personnel are to have a positive locking safety latch **locking Pin to be used while lifting personnel**		API RP 2D	(✓) YES ( ) NO
	*** Temperature Effected : When hooks are to be used at temperature above 400° F. (204°C) or below -40°F (-40°C), the hook manufacturer or a qualified person should be consulted *** Chemically Active Environment : The strength of hooks can be affected by chemically active environments, such as caustic or acid substances or fumes. The hook manufacturer or qualified person should be consulted before hooks are used in chemically active environment		ASME B30.10	
	Verify to ensure nut firmly at which trunion rotate. Identify to set-screw in nut/ swivel/ counter pin and thread condition.		Industry Standard	(✓) YES ( ) NO
	Last NDE inspection record		Industry Standard	Last Inspect date_____
	RECORD AUX BALL INFORMATION :	Manufacturer:	OEM Manual	MCKISSICK
		Model:	OEM Manual	MB 07T 235E
		Serial Number:	OEM Manual	036159
	Record Auxiliary Ball measurements and details for future comparison with historical data: For Model MB07T200E ONLY		Industry Standard	
	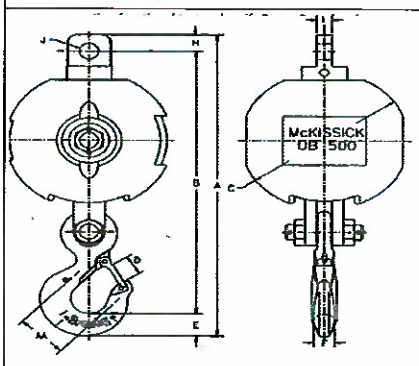	AA Dimensions 3.0 Inch	Industry Standard	3 mm/ inch
		A Dimensions 24.89 Inch	Industry Standard	24.8 mm/ inch
		B Dimensions 21.71 Inch	Industry Standard	21.7 mm/ inch
		C Dimensions 12.50 Inch	Industry Standard	12.5 mm/ inch
		D Dimensions 1.61 Inch	Industry Standard	1.6 mm/ inch
		E Dimensions 1.81 Inch	Industry Standard	1.8 mm/ inch
		F Dimensions 1.38 Inch	Industry Standard	1.4 mm/ inch
		H Dimensions 1.38 Inch	Industry Standard	1.4 mm/ inch
		I Dimensions 0.88 Inch	Industry Standard	0.8 mm/ inch
		J Dimensions 1.31 Inch	Industry Standard	1.3 mm/ inch
Safety system	Check Condition anti - two block , hanging chain ,eye bolts , fix bolts , shackle for missing , corrosion , erosion , deformation		API RP 2D	(✓) YES ( ) NO
	Check anti - two block kick out plate for freely movement		Company Spec/Standard	(✓) YES ( ) NO
	Check anti-2-block device proper function of Main winch		Company Spec/Standard	(✓) Function ( ) False
	Check anti-2-block device proper function of Aux. winch		Company Spec/Standard	(✓) Function ( ) False
	Check relation of boom radius and boom angle (lowest, middle, highest) with refrence to load chart. Recharge fluid W-15 to load indicator, if required.		API RP 2D	(✓) YES ( ) NO
	Functional test of emergency lowering system (See procedure in Emergency Load Lowering Box). Note: Keep for 1 Yr PM to sustain crane mechanic competency. Caution: Function test must be performed on top deck with max 2-foot height.		Company Spec/Standard	( ) YES ( ) NO ( ) N/A
	Visually check emergency load lowering kit. Ensure EMERGENCY LOWERING PROCEDURE and MATERIAL LIST are in the box. - Ensure ALL items shown on the list are in the box and in good condition - SECURE THE BOX WITH A TIE WRAP.		Company Spec/Standard	(✓) YES ( ) NO ( ) N/A
Slew Mechanism	Visually check for damage and excessive wear on gear teeth		OEM Manual	(✓) YES ( ) NO
	Visually check slew gear box in the area of oil seal for any leaks		API RP 2D	(✓) YES ( ) NO
	RECORD SLEW GEAR BOX INFORMATION :	Manufacturer:	OEM Manual	ESR
		Model:	OEM Manual	250 D1C9-51
		Serial Number:	OEM Manual	
	CHECK and RE-TORQUE swing drive gearbox mounting bolts at following brands: - ESKRIDGE, Model: 250 = 150 FT-LBS		API RP 2D	(✓) Yes ( ) No
	Check swing gearbox oil level/condition, top up if required		OEM Manual	(✓) YES ( ) NO
	Monitor slew gearbox oil condition by visually examine for burnt smell, metal particles, and/or other contaminants, record and change if found.	Meropa 220	OEM Manual	(✓) CHANGE OIL ( ) NOT CHANGE OIL

[redacted] / 3 Mar 25

SYSTEM	TASK	Specification	Record/Reading
	Change slew gear box oil	OEM Manual	(✓) CHANGE OIL ( ) NOT CHANGE OIL
	Grease all pivot points of slew ring (bearing)	OEM Manual	(✓) YES ( ) NO
	Grease open gears (pinion)	OEM Manual	(✓) YES ( ) NO
	Rotate crane 360 degree and check smoothness of operation	OEM Manual	(✓) YES ( ) NO
	Check swing drive static parking brake for proper operation Caution: DO NOT stop the swing of the crane with this static brake (parking brake)	OEM Manual	(✓) YES ( ) NO
	Check swing drive dynamic parking brake for proper operation	OEM Manual	(✓) YES ( ) NO
	Check swing lock mechanism condition; corrosion ,dent , loos all part,worn and wear	OEM Manual	( ) YES (✓) NO As found condition: Good
	Check swing lock mechanism freely lock and unlock for function. **Check and inspect for hydraulic for leaks on actuator model.**	OEM Manual	(✓) YES ( ) NO As found condition: Good
	Check condition of slew ring bolts e.g. Bolt grade and washers. Caution: Use only hardened flat washers under head of bolt. Do not use lock washers, or regular flat washers.	Industry Standard	(✓) YES ( ) NO As found condition: Good
	Monitor ball-ring grease sample. If found wear and tear particles, take sample and send to lab. **Wear assessment by grease sample analysis—wear may be monitored by periodic grease sample analysis as describe in this section. Grease samples should be collected every twelve months as a minimum and the results of the analysis recorded; this period should be shortened if obvious metal or contaminants are present.	API PR 2D	( ) SEND TO LAB (✓) NOT SEND TO LAB As found: Not Contaminants.
	Verify crane condition and load test as separate procedure. **Table 1—Static/Onboard Test Load and Radius** Static/Onboard Rated Load at a Specific Radius lb (kg) / Test Loads In Excess of Static/Onboard Rated Load at a Specific Radius ≤ 40,000 (18,144) / 25 % > 40,000 ≤ 100,000 (>18,144 ≤ 45,356) / 10,000 lb (4536 kg) > 100,000 (45,356) / 10 %	API 2C	(✓) YES ( ) NO Specific test load: 6400 lbs.
	Verify crane condition and load test as separate procedure. " Record crane load test in load test form."	Company Standard	(✓) YES ( ) NO

Risk Level Definitions: The following 3 levels indicate the impact the noted deficiency poses to the operation or structural integrity of the equipment:

Level 1 = Incidental	Level #2 = Restricted Operation	Level #3 =Out of Service
Minor deficiency that is recommended to be promptly addressed, but poses no safety and/or environmental risk. The crane can still be operated at full duty.	Deficiency identified that has the potential to limit, de-rate or damage the crane, its surroundings and/or the environment. The duty and locked/ tagged out until the crane's duty and operation should be de-rated or service restricted.	The crane should be removed from duty and locked/ tagged out until the deficiency is rectified.

System:	Risk Level:	Component: / Location:	In Accordance with: / Date Originated:
Description:			
Recommended Action:			
Recommended urgency timeframe for corrective action:		Completed Date:	Completed By:

System:	Risk Level:	Component: / Location:	In Accordance with: / Date Originated:
Description:			
Recommended Action:			
Recommended urgency timeframe for corrective action:		Completed Date:	Completed By:

System:	Risk Level:	Component: / Location:	In Accordance with: / Date Originated:
Description:			
Recommended Action:			
Recommended urgency timeframe for corrective action:		Completed Date:	Completed By:

System:	Risk Level:	Component: / Location:	In Accordance with: / Date Originated:
Description:			
Recommended Action:			
Recommended urgency timeframe for corrective action:		Completed Date:	Completed By:

System:	Risk Level:	Component: / Location:	In Accordance with: / Date Originated:
Description:			
Recommended Action:			

[redacted] / 3 Mar 25

SYSTEM	TASK		Specification		Record/Reading
Recommended urgency timeframe for corrective action:		Completed Date:		Completed By:	

System:	Risk Level:	Component:		In Accordance with:	
		Location:		Date Originated:	
Description:					
Recommended Action:					
Recommended urgency timeframe for corrective action:		Completed Date:		Completed By:	

Job Complaced By

[redacted]

2 March 2025

THE PEDESTAL CRANE CONDITION VERIFICATION

Date :			
Crane Owner : CTEP/ COTL Field: Benchamas Platform/ Vessel: BEWN			
Crane Owner 's representative : (Mech Supv./ M'Dent) [redacted]			
Qualified Inspector : (Qualified Crane Mechanic)			
Inspector 's company / agency : (Third Party or Outsource to witness if applicable)			
Manufacture..... Fabrication by..... Year of Fabrication 2003 Country USA Model / Serial KOB-80 / 22103C Standard API Edition FIFTH Edition 1995			Remark
Safe Working Load (SWL) —> OEM	18.16 Metric Tonnes		
Safe Working Load (SWL) —> Existing via MOC, if applicable	– Metric Tonnes		
Boom length, Main	80 Ft		
Boom length, Auxiliary if applicable	– Ft		
Part of line main hoist	4 Part line		
Part of line auxiliary hoist	1 Part line		
Safe Working Load at longest boom radius	80 ft	5.83 Metric Tonnes/~~Lbs~~	
Safe Working Load at shortest boom radius	13.55 ft	18.16 Metric Tonnes/ Lbs	
The document of crane specification for Testing , Maintenance and Inspection are provided by:	OEM	MOC / Crane Engineer	
Has the crane ever been modified by MOC ? (To verify if this crane is modified with MOC --> Allow to test the crane. If this crane is modifed without MOC --> Not allow to test the crane)	YES	NO	(Employers are not allowed to modify or adjust any part of cranes or dericks or consent to other persons to do these things, that might reduce the safety of the employees who work with the cranes or derricks).
Does the rotating part have proper guard in place?	YES	NO	(Need mitigation plan)
Is the ladder and hand rail in place?	YES	NO	(Need mitigation plan)
Is the maintenance platform in place?	YES	NO	(Need mitigation plan)
Is the SWL tag labelled on crane pedestal, main block or aux ball?	YES	NO	(Need mitigation plan)
Verify if the crane major component damaged or not	YES (Need to repair or mitigate unsafe condition with MOC before testing)	NO	(Employers shall not allow employees work with damaged/ unsafe cranes or derricks)
Inspect boom end connections, for bends, dents, corroded areas, cracked welds, and signs of mechanical damage, wear, etc. **any deviation should be reported** Level 1 = Incidental : Minor deficiency that is recommended to be promptly addressed, but poses no safety and/or environmental risk. The crane can still be operated at full duty. --> Allow to test Level #2 = Restricted Operation: Deficiency identified that has the potential to limit, de-rate or damage the crane, its surroundings and/or the environment. The duty and locked/ tagged out until the crane's duty and operation should be de-rated or service restricted. --> To be derated Level #3 = Out of Service;The crane should be removed from duty and locked/ tagged out until the deficiency is rectified. --> Not Use	YES (To be verified)	NO	
Function Load Testing			
1. Verify Crane SWL (Existing)	3.0 Metric Tonnes		
2. Verify routine maximum actual load.	2.4 Metric Tonnes		
3. Select the specimen load to be more than actual routine load 1.25 times but not more than SWL. Example # 1 : Crane 's SWL is 18 Metric Tonnes. The routine maximum actual load is 2.4 Metric Tonnes. Therefore, the load testing shall be 2.4 x 1.25 = 3 Metric Tonnes. Example # 2 : Crane 's SWL is 18 Metric Tonnes. The routine maximum actual load is 16 Metric Tonnes. By calculation, the load testing is 16 x 1.25 = 20 Metric Tonnes more than SWL (18 MTon). **Therefore, the load testing shall be 18 Metric Tonnes equal to SWL.**	3 Metric Tonnes		
4. Use Auxiliary Winch if specimen load less than or equal 3 Metric Tonne	YES	NO	
5.Use Main Winch if specimen load more than 3 Metric Tonne	YES	NO	
6. The record of load testing : Fill in "Function Test Record" sheet attached.			

RECORDED FUNCTION TEST PROCEDURE

1. CHECK AND RECORD READING RADIUS AND BOOM INDICATIOR AT FOUR (4) VALUES INCLUDING MAXIMUM AND MINIMUM.

(ALL REDIUS MEASUREMENT ARE TO BE TEKEN FROM THE CENTERLINE OF CRANE ROTATION)

ACTUAL	INDICATED RADIUS (FT)
A) 15' (MINIMUM)	15
B) 20'	20
C) 25'	25
D) 30' (INTERMIDIATE)	30
E) 40'	40
F) 50' (INTERMIDIATE)	50
G) 60'	60
H) 75' (MAXIMUM)	75

2. CHECK AND RECORD READING ON BOOM ANGLE / DEGREES.

SPECIFICATION	INDICATED BOOM ANGLE (DEGREES)
1). MAXIMUM. ....80.... DEGREES	80
2). INTERMEDIATE. ....60.... DEGREES	60
3). INTERMEDIATE. ....40.... DEGREES	40
4). MINIMUM. ....0.... DEGREES	0

3. READING ON LOAD INDICATOR WITHOUT SLINGS OR LOAD / LBS. (LOAD BLOCK + WIRE ROPE)

ACTUAL	INDICATOR READ FREE LOAD, (LBS)
1). MAXIMUM RADIUS 1000 LBS.	1000
2). MINIMUM RADIUS 1250 LBS,	1250

4. CHECK AND RECORD ENGINE HIGH IDLE SPEED / RPM.

SPECIFICATION	INDICATED OF FUNCTIONAL (RPM)
1). IDLE SPEED 850 RPM	850
2). LOW SPEED – RPM	–
3). HIGH SPEED 2200 RPM	2200

5. FUNTIONALLY TEST THE FOLLOWING.

ACTUAL	INDICATED OF FUNCTIONAL (TESTED)
A) MAIN HOIST ANTI -TWO BLOCK.	Function
B) AUXILIALY HOIST ANTI -TWO BLOCK.	Function
C) HIGH BOOM ANGLE KICK OUT.	N/A
D) LOW BOOM ANGLE KICK OUT.	N/A
E) PRIME MOVER SHUTDOWN.	Function
F) EMERGENCY SHUTDOWN.	Function
G) ROTATE CRANE 360 LEFT.	Smooth
H) ROTATE CRANE 360 RIGHT.	Smooth

6. RECORD HYDRAULIC RELIEF VALVE PRESSURE SETTING ON FOLLOWING HYDRAULIC FUNCTION:

SPECIFICATION	INDICATED PRESSURE (PSI)
A) MAIN HOIST ...2575..... PSI.	2575
B) AUXILIALY HOIST ...1800.... PSI.	1800
C) BOOM HOIST ...3000.... PSI.	3000

TEST CONDUCTED BY: [redacted] POSITION : CR-Mech

CRANE OPERATOR : [redacted] POSITION :

COMMENTS : DATE : 2 March 2025

.....

.....

.....

.....

CRANE Mfg. : Nautilus
MODEL: 180B-80
SERIAL NUMBER :

LOCATION: BEWJ

DATA BASE - PM JOB TASK CARD
WO: 1248511

Crew Size: 4
Estimated Hours: 36

SYSTEM	TASK		Specification	Record/Reading
Safety	Perform Job Safety Analysis (JSA)		Company Spec/Standard	(✓) YES ( ) NO
	Obtain "COMPANY PERMIT TO WORK		Company Spec/Standard	(✓) YES ( ) NO
	Perform Tool Box Talk		Company Spec/Standard	(✓) YES ( ) NO
	BEFORE/AFTER JOB EXECUTION: Ensure to comply with isolation procedure (LOCK OUT/TAG OUT, WARNING SIGNS and BARRIERS).		Company Spec/Standard	( ) YES ( ) NO
Required Tools	Insure proper tools are available at the job site		Company Spec/Standard	(✓) YES ( ) NO
	Tool bag		Company Spec/Standard	(✓) YES ( ) NO
	Tool box		Company Spec/Standard	(✓) YES ( ) NO
	Tool Container		Company Spec/Standard	(✓) YES ( ) NO
	MPI equipment and operator		Company Spec/Standard	( ) YES (✓) NO
	Check safety harness Software and Hardware should be good condition before use		Company Spec/Standard	(✓) YES ( ) NO
	Check Rescue Equipment ready to use onsite		Company Spec/Standard	(✓) YES ( ) NO
	Portable Scaffolding and Crew if require		Company Spec/Standard	(✓) YES ( ) NO
Lubricants	Insure proper lubricants and consumables are available at the job site.		Company Spec/Standard	(✓) YES ( ) NO
	Hydraulic System - Hydraulic Oil	Rando HD-68	OEM Manual	(✓) YES ( ) NO
	Slew Gearbox - Gear Oil	Meropa 220	OEM Manual	(✓) YES ( ) NO
	Auxiliary Hoist - Gear Oil	'Meropa 220	OEM Manual	(✓) YES ( ) NO
	Main Hoist - Gear Oil	Meropa 220	OEM Manual	(✓) YES ( ) NO
	Grease Points - Lithium Based **IT MUST NOT INCLUDE MOLYBDENUM DISULPHIDE**	MULTIFAK EP#2	OEM Manual	(✓) YES ( ) NO
	Open Gear Teeth - Open Gear Lube highly water resistant and of an adhesive nature.	OMEGA 73	OEM Manual	(✓) YES ( ) NO
	Wire rope Lubricant Company preferred grade	Birlube 70	OEM Manual	(✓) YES ( ) NO
	Engine Oil - SAE Grade 15W-40 (Delo Gold)	15W-40	OEM Manual	(✓) YES ( ) NO
	Safe Load Indicator fluid	W-15	OEM Manual	(✓) YES ( ) NO
	Engine Radiator - Should have radiator preservatives additives	Cat® SCA	OEM Manual	(✓) YES ( ) NO
Consumables	Spray Cold Galvanize		Company Spec/Standard	(✓) YES ( ) NO
	Denso Tape		Company Spec/Standard	(✓) YES ( ) NO
	WD-40		Company Spec/Standard	(✓) YES ( ) NO
History Review	Before starting work, tasks preparation at least 1 day prior to starting work: 1. Review history PM/ CM from Roving Team, 2. Review last PM/ CM/ PMI from Crane Mech, 3. List out all punch list and prepare parts. 4. Review last Certificate task performed		API RP 2D	(✓) YES ( ) NO
	Require to update part history from Crane Mech on following main compenents to ensure the right parts are prepared: - Aux/ Main/ Boom Cylinder, Engine, Swing Gearbox, etc. Reference: Crane OEM information of each part need to be recorded - Manufacturer & Contact info - Model & serial number - Installation date		Company Spec/Standard	(✓) YES ( ) NO
	Review history data from Certificates and incorporate into current PM: - Pull Test Certificates (ongoing update, 4 yr. history). - Load Test Certificates (ongoing update, 4 yr. history). - Wire Rope Certifications (running rope and standing rope) (life of rope). - Hoist Certifications for hoist classified as "personnel handling" hoist.		API RP 2D	(✓) YES ( ) NO
	Review Last Preventative Maintenance Records (Inspection Reports) - Pre-use (Pre-Post Inspection) - 6 Monthly (API RP 2D Not Defined, Company Standard) - 1 Yearly (API RP 2D Defined Annual Inspection)		API RP 2D	(✓) YES ( ) NO
Lifting Gear Preparation	Visually Inspect (Sling, sling hooks and shackles) include Websling / Chain		Company Spec/Standard	(✓) YES ( ) NO
	Check color code / Tag & date inspection		Company Spec/Standard	(✓) YES ( ) NO
General	Determine if access route to-from crane is clean, safe, unobstructed and adequately protected against falls, tripping and slipping		Company Spec/Standard	(✓) YES ( ) NO
	Check drain lines and drip pans for deterioration		API RP 2D	(✓) YES ( ) NO
	Remove any sediment collected in the bottom of drip pans		Industry Standard	(✓) YES ( ) NO
	Check for general crane and components for loss of protective coating and corrosion		Industry Standard	(✓) YES ( ) NO
	Check for missing or loose ,corrosion, deformation pins, pin keepers, bolts, nuts, fasteners of all laders, cages and working platform		API RP 2D	(✓) YES ( ) NO
	Apply grease to exposed grease parts (control valve spools, ball-ring gear, parking brake valve, etc.)		OEM Manual	(✓) YES ( ) NO
Prime Mover	Engine Caterpillar		OEM Manual	(✓) YES ( ) NO
	CATERPILLAR MODEL 3406	S/N.:	OEM Manual	6JB21694
		AR.No.:	OEM Manual	4W-3793
	Change engine lube oil & oil filter and check the condition of old oil. As found ; Normal		OEM Manual	(✓) YES ( ) NO
	Check diesel tank level, top up if required.		OEM Manual	(✓) YES ( ) NO
	Check / Clean crankcase breather cap. Change if required		OEM Manual	(✓) YES ( ) NO
	Check / Clean air cleaner filter, Replace if require. (Note : Include inspect air cleaner housing)		OEM Manual	(✓) YES ( ) NO
	Check condition and inspect of the radiator and cap.		OEM Manual	(✓) YES ( ) NO
	Check for any signs of leaks on or around the engine le; Crankshaft seal for front & rear seal , Engine oil cooler. As found; No leaks		OEM Manual	(✓) YES ( ) NO
	Check condition exhaust system for leaks, corrosion, insulation and general. As found ; Good		OEM Manual	(✓) YES ( ) NO
	Check condition of all engie hoses and tube. (Fuel supply,Cooling system and Lube oil system. As found; Good		OEM Manual	(✓) YES ( ) NO
	Drain water and sediment form diesel tank. As found ;		OEM Manual	(✓) YES ( ) NO
	Check / Clean Diesel tank level sightglass and diesel tag.		OEM Manual	(✓) YES ( ) NO
	Apply grease of fan bearing/shaft.		OEM Manual	(✓) YES ( ) NO
	Check and inspect the vibration damper and pulley. As found ; Smooth		OEM Manual	(✓) YES ( ) NO
	Change water coolant and check condition base of water coolant and record PH.		OEM Manual	(✓) YES ( ) NO
	COOLANT PARAMETERS (PH):	6 or higher	OEM Manual	PH = 7
	HOUR METER PARAMETERS:	LAST READING _____ HRS	OEM Manual	4616 HRS
	Check and retigthen the bolts of all engine base. / Inspection mouting rubber. As found ; Good		OEM Manual	(✓) YES ( ) NO

[redacted] / 29 May 25.

SYSTEM	TASK			Specification	Record/Reading
	Inspect the engine fan blades that there is a break is it severely distorted or rusted. As found : Good			OEM Manual	(✓) YES ( ) NO
	Change and adjust the tension engine belts. Remark; To check belt Tension, after has engine run more than 30 minutes apply 400 N (90 lbs) of force midway between the pulleys. Correctly adjusted belts with deflect 13 to 19 mm (1/2 to 3/4 inch).			OEM Manual	(✓) YES ( ) NO
	Check engine HYD starter drive gear bendix and fly wheel gear teeth condition and record. **Replace if required"			OEM Manual	(✓) YES ( ) NO Bendix Gear : 90 % Fly wheel, Gear teeth : 80 %
	Check and inspect condition the Bendix of hydraulic Starter motor.			OEM Manual	(✓) YES ( ) NO
	Lubricate and check engine throttle system.			OEM Manual	(✓) YES ( ) NO
	Determine if the tachometer operates properly: Record Value of Idle & Max Speed (RPMs) Note: Too low Idle (RPMS) will cause excessive worn at winch brake			OEM Manual	
	ENGINE RPM SPECIFIC	IDLE SPEED	850-950 RPM	OEM Manual	850 RPM
		MAX SPEED	2200 RPM	OEM Manual	2200 RPM
	Confirm engine oil pressure as per Parameters below and Record Value:			OEM Manual	
	ENGINE OIL PRESSURE SPECIFIC	Minimum	Not lower then 30 PSI	OEM Manual	30 PSI
		Maximum	70 PSI	OEM Manual	70 PSI
	Confirm engine fuel pressure Parameters are correct and Record Value:			OEM Manual	
	ENGINE FUEL PRESSURE SPECIFIC** **Note;Fuel pressure at high idle is lower than 105 kPa (15 psi)PARAMETERS	Normal	>35 PSI.	OEM Manual	(✓) YES ( ) NO
	Confirm engine temperature Parameters and Record Value:			OEM Manual	
	ENGINE WATER TEMP SPECIFIC	NORMAL	120 - 180 degrees F	OEM Manual	170 F
	Test engine SAFETY DEVICE- ensure engine kill cable shuts off FUEL supply			API RP 2D	(✓) Function ( ) False
	Test engine SAFETY DEVICE- ensure EMERGENCY KILL CABLE - shuts off AIR supply			API RP 2D	(✓) Function ( ) False
	Test engine SAFETY DEVICE- ensure ENGINE low lube oil - releases OIL PRESSURE to activate shuts off engine ***Note*** Engine oil pressure low alarm at 20 PSI			Company Spec/Standard	(✓) Function ( ) False
	Test engine SAFETY DEVICE- ensure HIGH TEMP - releases OIL PRESSURE to activate shuts off engine			Company Spec/Standard	(✓) Function ( ) False
	Change water separator filter.			OEM Manual	( ) YES (N/A) ( ) NO
	Check the general conditionand functioning of turbocharger. Note;			OEM Manual	( ) Leak (✓) Not Leak
	Change fuel filter and inspect the primary hand pump.			OEM Manual	(✓) YES ( ) NO
	Check general condition the Governor and control linkage. (Inspect the throtle linkage)			OEM Manual	(✓) YES ( ) NO
	Check or adjust the engine valve lash and bridge valve. (Intake vale = 0.015", Exhaust valve = 0.030")			OEM Manual	(✓) YES ( ) NO
	Check condition wear of pump drive spline and record **Note; Remaining 70% of Original Spline Surface must be replace.			Company Spec/Standard	90 % Remaining
	Check condition wear of adaptor Coulping spline shaft and record **Note; Remaining 70% of Original adaptor Coulping spline shaft Surface must be replace.			Company Spec/Standard	90 % Remaining
	Check condition wear of Coulping spline and record. Re-tigthen of all lock bolts. **Note; Remaining 70% of Original adaptor Coulping spline shaft Surface must be replace.			Company Spec/Standard	90 % Remaining
Hydraulic Start System (Apply for C2-Remote P/F Only)	Check pressure system at the pressure gauge which should reach 3,000 PSI as standard when the system is FULLY charged. Record Value. (As the system cools down, the pressure should drop slightly and finally stabilised.)			OEM Manual	(✓) YES ( ) NO
	Visually inspect all hydraulic connections and hoses for leaks and retighten if necessary. (Caution: This should NOT be done if the system is under pressure.) 1. Slowly release system pressure by loosening the bleed screw on top of the hand pump. 2. Ensure no pressure remains, retighten the suspected leak fitting or replace the damaged hose or component. 3. Retighten the bleed screw on the hand pump. 4. Pump the system up to 2200 - 2600 PSI 5. Inspect that the leak was eliminated.			OEM Manual	(✓) YES ( ) NO
	Function check Accumulator Pre-charge. (Caution: This should NOT be done if the system is under pressure.) 1. Shut the engine off, release system pressure via the bleed screw on top of the hand pump 2. Retighten bleed screw and actuate the hand pump. The pressure will rapidly increase and then stabilised. This pressure is related to accumulator gas pre-charge pressure. 4. If the pressure rapidly increase to 3000 PSI, it indicates that the accumulator has lost its gas charge. 5. Troubleshoot as necessary			OEM Manual	(✓) YES ( ) NO
	Check function rechaging system by function boom down while the engine running. 1. The crane engine is running at 1,000-1500 RPM. 2. Slowly control lever boom function down for charging pressure to accumulator. 3. This pressure should read on prssure gauge between 2200 - 2600 PSI depending on the recharge ratio 80% std. (90% optional). Record Pressure Value.			OEM Manual	2600 PSI
	Check Nitrogen pressure in Accumulator ***Note**spec @ 1,500 psi as follow schematic and if found pressure loss below 1400 PSI then prepare recharge nitrogen in system			OEM Manual	1500 PSI
Hoist / Brakes	Visually check a hoist exhibits erratic operation and/or unusual noise, the hoist must be taken out of service until it is inspected and serviced by a qualified technician. Continued operation of a hoist with a defect in a critical component may lead to loss of load control, property damage, serious injury or death.			OEM Manual	(✓) YES ( ) NO
	Visual exteriors of hoist, frames, drums and flanges for damage, leaks, cracks and wear and repair/replace as required to maintain the structural integrity of the hoist.			OEM Manual	(✓) YES ( ) NO
	Check all hoist mounting pins, bolts or other fasteners and replace or tighten as necessary.			OEM Manual	(✓) YES ( ) NO
	Lubricant level must be maintained between the minimum and maximum levels; midway up sight glass or at bottom of level plug port as equipped and check/clean plug vent. Use only the recommended type of lubricant.			OEM Manual	(✓) YES ( ) NO
	Inspect Brake Valve Opening Pressure test V/V 1-1/4" PD Series : no lower than 550 PSI V/V 1-1/2" CH Series : no lower than 575 PSI	Main		Braden Bulletin 527-Dec,1996	600 PSI
		Aux			550 PSI
	Inspect Brake cylinder opening pressure test. CH/PD Series : 400-450 PSI.	Main		Industry Standard	400 PSI
		Aux			400 PSI
	Measure differancian of static and dynamic brake. CH/PD Series : 150-250 PSI.	Main		Industry Standard	200 PSI
		Aux			150 PSI
	Check for external oil leaks and repair as necessary. This is extremely important due to the accelerated wear that will result from insufficient lubricating oil in the hoist.			OEM Manual	(✓) YES ( ) NO
	RECORD BOOM CYLINDER INFORMATION :	Boom cylinder Diameter:		OEM Manual	DIA: 16 Inch
		CY Number:		OEM Manual	L-8108-14 R-8108-15
		Serial Number:		OEM Manual	L-9204 R-9205
	RECORD MAIN HOIST INFORMATION :	Manufacturer:		OEM Manual	Braden
		Model:		OEM Manual	CH210A-35120-02-1
		Serial Number:		OEM Manual	0301081
	Check MAIN HOIST for proper operation and good condition			API RP 2D	(✓) YES ( ) NO

[redacted] / 27 May 25

SYSTEM	TASK			Specification	Record/Reading
	Brake test & record pressure of MAIN HOIST.			OEM Manual	(✓) YES ( ) NO As found On spec
	Change main hoist gear oil and inspect for small particles in the old oil. ** Refer to Onsite Gear Oil Sample Procedure ** ** Replace and send oil sample to SKL if abnormal ** ** Take photo of Oil Sampling for Reference**			OEM Manual	(✓) YES ( ) NO As found Normal
	RECORD AUXILIARY HOIST INFORMATION :		Manufacturer:	OEM Manual	Braden
			Model:	OEM Manual	CH150A-23110-01-7
			Serial Number:	OEM Manual	0202471
	Check AUXILIARY HOIST for proper operation and good condition			API RP 2D	(✓) YES ( ) NO
	Brake test & record pressure of AUXILIARY HOIST			API RP 2D	(✓) YES ( ) NO
	Change Aux. hoist gear oil and inspect for small particles in the old oil. ** Refer to Onsite Gear Oil Sample Procedure ** ** Replace and send oil sample to SKL if abnormal ** ** Take photo of Oil Sampling for Reference** Please record if any abnormal condition. Note.....			OEM Manual	( ) SEND SKL LAB (✓) NOT SEND SKL LAB
	Check pressre relief Valve: Determine hoistes' relief valve pressure gauge is working and giving accurate measurement by notice whether pressure gauge is vibrating or not. If not, set relief valve pressure in accordance with the schematic and parameters below. Record all readings.			OEM Manual	(✓) YES ( ) NO
	BOOM RELIEF VALVE TEST	Relief Specific:	3,000 PSI	OEM Manual	3000 PSI
	MAIN HOIST RELIEF VALVE TEST	Relief Specific:	2,575 PSI	OEM Manual	2575 PSI
	AUX HOIST RELIEF VALVE TEST	Relief Specific:	2,800 PSI	OEM Manual	2800 PSI
	SWING RELIEF VALVE TEST	Relief Specific:	1,500 PSI	OEM Manual	1500 PSI
	Measure Pressure of hoist motor case drains and Record Value Reference Bulletin: BRADEN Inspection, Testing, Preventive Maintenance and Special Operating Instructions For Planetary Hoists PB-308 latest edition for further details.			OEM Manual	
	MAIN HOIST CASE DRAIN for Gear Motor (Down Mode).	PRESSURE	< 100 psi	Company Spec/Standard	18 PSI
	AUX. HOIST CASE DRAIN for Gear Motor (Down Mode).	PRESSURE	< 100 psi	Company Spec/Standard	15 PSI
Hydraulic System	Check hydraulic tank oil level. Oil should be visible in the sight glass. Top up as required (3/4 Tank Minimum)			OEM Manual	(✓) YES ( ) NO
	Check hydraulic oil condition. (Check if running hours are more than 100 hours from last oil change or during Annual inspection) ** Refer to Onsite Hydraulic Oil Sample Procedure ** ** Replace and send oil sample to SKL if abnormal ** ** Take photo of Oil Sampling for Reference**		Rando HD-68	Company Spec/Standard	( ) SEND SKL LAB (✓) NOT SEND SKL LAB
	Drain off 1 liter of oil to remove condensed water. If water is present, drain until water is removed and top up with clean oil			Industry Standard	(✓) YES ( ) NO
	Check for any hydraulic leaks			Industry Standard	(✓) YES ( ) NO
	Check the hydraulic hose, piping and tubing for mechanical damage, corrosion, splits, blisters, cracking or excessive abrasion on the outer surface			API RP 2D	(✓) YES ( ) NO
	Check that all hydraulic hose connections are sound and that all mounting and pivoting connections are secure.			Industry Standard	(✓) YES ( ) NO
	Lubricate hydraulic swivel in pedestal and insure tie down restrains are in place and preventing the swivel from rotating with the crane structure.			OEM Manual	(✓) YES ( ) NO
	Ensure the filler breather on tank is not covered or clogged			Industry Standard	(✓) YES ( ) NO
	Visually inspect for missing or loose pins, pin keepers, bolts, nuts, fasteners on all pumps, motors and valves			API RP 2D	(✓) YES ( ) NO
	* Re-tighten the stud bolt of hydraulic main pump and marking the nut for checking to prevent loosening. Note : Torqe spec model P76, P75, PGP/PGM350 ,PGP/PGM330 = 200 ft-lbs. , for model PGP/PGM315 = 140 ft-lbs. and PGP/PGM365 = 450 ft-lbs.			The Commercial Intertech manual	(✓) YES ( ) NO
	Check the filter bypass indicator, while engine is running			OEM Manual	(✓) YES ( ) NO
	With engine running (after all other items pass inspection), check the system for leaks around fittings, hoses, valves and reservoirs			Industry Standard	(✓) YES ( ) NO
	With engine running, check the source of any unusual noise or vibration that may cause or indicate equipment damage or wear			Industry Standard	(✓) YES ( ) NO
	Ensure all hoses are properly rated for the system, see "Parameters" for each system for details.			Industry Standard	(✓) YES ( ) NO
	Record hydraulic oil operating temperture. Note: Hydraulic fluid overheating temperature is over 180 F degrees or 82 C, degrees (reservoir temperature)			Industry Standard	140 Degree F
	Determine if hydraulic return pressure gauge is working and giving accurate measurements. Record readings				
	RECORD HYDRAULIC RETURN PRESSURE PARAMETERS:		60 PSI "maximum"	OEM Manual	12 PSI
	Check and inspect the hydraulic return filters and seals.			OEM Manual	(✓) YES ( ) NO
	Function Testing and record pressures with engine at :		2,200 RPM	API RP 2D	
	BOOM FUNCTION TEST (Need Crane Mech to verify each platform)			OEM Manual	
	Boom Angle : 60 Degree (Recommend or as applicable) — UP	Cracking pressure	RECORD	OEM Manual	600 PSI
		Full Speed Pressure	RECORD	OEM Manual	800 PSI
	DOWN	Cracking pressure	RECORD	OEM Manual	900 PSI
		Full Speed Pressure	RECORD	OEM Manual	1500 PSI
	MAIN HOIST FUNCTION TEST (Need Crane Mech to verify each platform)			OEM Manual	
	Boom Angle : 60 Degree (Recommend or as applicable) — UP	Cracking pressure	RECORD	OEM Manual	50 PSI
		Full Speed Pressure	RECORD	OEM Manual	500 PSI
	DOWN	Cracking pressure	RECORD	OEM Manual	700 PSI
		Full Speed Pressure	RECORD	OEM Manual	1400 PSI
	AUX HOIST FUNCTION TEST (Need Crane Mech to verify each platform)			OEM Manual	
	Boom Angle : 60 Degree (Recommend or as applicable) — UP	Cracking pressure	RECORD	OEM Manual	50 PSI
		Full Speed Pressure	RECORD	OEM Manual	600 PSI
	DOWN	Cracking pressure	RECORD	OEM Manual	700 PSI
		Full Speed Pressure	RECORD	OEM Manual	1400 PSI
	SWING FUNCTION TEST (Need Crane Mech to verify each platform)			OEM Manual	
	[illegible]	Cracking pressure	RECORD	OEM Manual	200 PSI

[redacted] / 29 May 25

SYSTEM	TASK				Specification	Record/Reading
	Boom Angle : 60 Degree (Recommend or as applicable)	LEFT	Full Speed Pressure	RECORD	OEM Manual	700 PSI
		RIGHT	Cracking pressure	RECORD	OEM Manual	200 PSI
			Full Speed Pressure	RECORD	OEM Manual	700 PSI
Electrical system, Crane Boom Lighting and red obstruction light	Check the electrical junction boxes, wires and connections for deterioration, desiccant bags, (replace as required)				Industry Standard	(✓) YES ( ) NO
	Check the condition of the grounding and lighting protection system.				Company Spec/Standard	(✓) YES ( ) NO
	Visually inspect boom floodlight and light guards for loose, missing, corroded				Company Spec/Standard	(✓) YES ( ) NO
	Check condition pipe support , U-bolt ,nuts of boom floodlight and Electric slipring for loose , missing , corroded				Company Spec/Standard	(✓) YES ( ) NO
	Check Electric slipring/swivel for 360° continuous rotation				OEM Munnal	(✓) YES ( ) NO
	Check Water ingress, condensation in electric slipring, red obstruction light and boom floodlight				OEM Munnal	(✓) YES ( ) NO
	Check feely movement and lubricate of boom floodlight				OEM Munnal	(✓) YES ( ) NO
	With generator in operation, intergize all lights to unsure proper function.				API RP 2D	(✓) YES ( ) NO
	Check condition of crane boom lighting and safety net is secured with strong point. * **Safety net should be replace 24 months after installation (2 year)***			Last installation date _____	Company Spec/Standard	(✓) YES ( ) NO
	Check function of crane sound signal				Company Spec/Standard	( ) YES ( ) NO (✓) N/A
	Check function of crane boom lighting at boom upper section				Company Spec/Standard	(✓) YES ( ) NO ( ) N/A
	Check function of crane boom lighting at boom lower section				Company Spec/Standard	(✓) YES ( ) NO ( ) N/A
	Check function of crane boom lighting at winch skid				Company Spec/Standard	(✓) YES ( ) NO ( ) N/A
	Check function of crane boom lighting at crane cabin				Company Spec/Standard	(✓) YES ( ) NO ( ) N/A
	Check function becon light at boom tip				Company Spec/Standard	(✓) YES ( ) NO ( ) N/A
	Inspection wire rope guide & Roller assembly				Company Spec/Standard	(✓) YES ( ) NO
	Visually inspect red obstruction light pipe support, u-bolts, nuts connection to hand rail for loose, missing, corroded				Company Spec/Standard	(✓) YES ( ) NO
	Visually inspect safety sling attached to the red obsruction light and its base for loose, missing, corroded				Company Spec/Standard	(✓) YES ( ) NO
	Visually inspect red obstruction light function. The light is designed to turn on all the time.				Company Spec/Standard	(✓) YES ( ) NO
Operator Control Station	Check general condition of control panel, bolts, paint security, etc.				API RP 2D	(✓) YES ( ) NO
	Determine if there is a serviceable fire extinguisher in the vicinity of the crane				Company Spec/Standard	(✓) YES ( ) NO
	Determine if correct load chart is in use and easily visible for operator				API RP 2D	(✓) YES ( ) NO
	Determine if charts, indicators and hand signal chart are in the cabling and firmly attached				API RP 2D	(✓) YES ( ) NO
	Determine if angle/radius indicator plate is easily visible to operator and is moving freely.				API RP 2D	(✓) YES ( ) NO
	Check condition of control levers and determine if they "dead-man" back to the neutral position.				API RP 2D	(✓) YES ( ) NO
	Check condition of pressure gauges.				API RP 2D	(✓) YES ( ) NO
	Check proper control labels are firmly installed, completely legible and properly labeled				API RP 2D	(✓) YES ( ) NO
	Check controls for freedom-of-movement				API RP 2D	(✓) YES ( ) NO
	Check condition , Leak, freely moement of Dynamic swing break system *** Note; If HYD Oil loose in CYD reservoir must be refill*				OEM Manual	(✓) YES ( ) NO
	Check condition , Leak, freely moement of Accelerate System *** Note; If HYD Oil loose in CYD reservoir must be refill*				OEM Manual	(✓) YES ( ) NO
	Check all safety glass and rubber seal for proper condition				API RP 2D	(✓) YES ( ) NO ( ) N/A
	Function Test Horn. Note;.....				Industry Standard	( ) YES ( ) NO (✓) N/A
	Ensure PRE/POST Check List and Pocket Manual in the cabin. Note;.....				Company Standard	(✓) YES ( ) NO ( ) N/A
Load Indicator System	Visual check on fittings and connections for leaks. Fix leak if any. Note: Good				OEM Manual	(✓) YES ( ) NO
	Should any leaks exist, stop leak and recharge system, refer to maintenance manual				OEM Manual	(✓) YES ( ) NO
	Change and flushing Load cell fluid.				OEM Manual	(✓) YES ( ) NO
	Check general condition of tubbing, hoses, pins bolts, paint, etc.				Industry Standard	(✓) YES ( ) NO
	Insure load cell is free of obstructions				OEM Manual	(✓) YES ( ) NO
	Check condition of gauge(s) face and clean glass as required.				OEM Manual	(✓) YES ( ) NO
	Check the scale's operation and weighing accuracy. (Main Hoist) Remark : Maximum variance +/- 2% Note; On Standard				Company Spec/Standard	(✓) YES ( ) NO ( ) N/A
	Check the scale's operation and weighing accuracy. (Aux. Hoist) Remark : Maximum variance +/- 2% Note; On Standard				Company Spec/Standard	(✓) YES ( ) NO ( ) N/A
	Check the internal casting fluid of weight indicator. top up if required				Industry Standard	(✓) YES ( ) NO ( ) N/A
	Insure SWL tag matches ratings on the Crane Load Chart.				OEM Manual	(✓) YES ( ) NO ( ) N/A
	Insure Boom Length, matches the Crane Load Chart				OEM Manual	(✓) YES ( ) NO ( ) N/A
	Insure Boom Angle measurements and readings match the boom angle indicator.				OEM Manual	(✓) YES ( ) NO ( ) N/A
	Insure Boom Radius measurements indicate the distance from center line of the crane to the hook				OEM Manual	(✓) YES ( ) NO ( ) N/A
	Check Main load cell gap 1/4 (0.250) inch				OEM Manual	(✓) YES ( ) NO ( ) N/A
	Check Aux load cell gap 3/8(0.380) inch (Compression Load Cell Type)				OEM Manual	(✓) YES ( ) NO ( ) N/A
Pedestal & Structure	Visually check Pedestal for chipped/cracked paint, deformation, worn parts, dents, corroded areas, cracks weld, etc.				API RP 2D	(✓) YES ( ) NO
	Check water rain drain at pedestal must be not obstuct				Industry Standard	(✓) YES ( ) NO
	Check pin and cotter pin of pedestal missing , corrosion, wear, damage and exercise pin.				Industry Standard	(✓) YES ( ) NO
	Visually check Base - Plate connection and Base hoist Structure for chipped/cracked paint, deformation, worn parts, dents, corroded areas, cracks weld, etc.				API RP 2D	(✓) YES ( ) NO
	Check A fixed such as Handrial, Walkway, Grating, stationary structure without significant movement in response to waves and currents in normal operating conditions.				API RP 2C	(✓) YES ( ) NO
	Visually check and lubricate maintenance Jib. ***Note*** If on pedestal crane				OEM Manual	(✓) YES ( ) NO ( ) N/A
	Check maintenance Jib is secure firmly. ***Note*** If on pedestal crane				OEM Manual	(✓) YES ( ) NO ( ) N/A
Box Boom & Luffing CYD	Check and Verify entire box boom and Boom CYD for loss of protective coating and corrosion. Note: Good				API RP 2D	(✓) YES ( ) NO
	Check and Verify entire box boom and Boom CYD for chipped/cracked paint, deformation, worn parts, dents, corroded areas, cracks, etc. Note; Good				API RP 2D	(✓) YES ( ) NO
	Check and Verify boom end connections, for bends, dents, corroded areas, cracked welds, and signs of mechanical damage, wear, etc. **any deviation should be reported**				API RP 2D	(✓) YES ( ) NO
	Check and Verify boom rest and wooden support to ensure it's in good condition				API RP 2D	(✓) YES ( ) NO
	Inspect pin and pin holes of Upper tank and Lower tank for excessive clearance				OEM Manual	(✓) YES ( ) NO
	BOOM CYLINDER PIN MAXIMUM TOLERANCE	0.125 Inch (3mm)			Industry Standard	As found On Standard
	Check BOOM CYLINDERS for proper operation and good condition				API RP 2D	(✓) YES ( ) NO
	Check Boom cylinder barrels and rods for leaks, mechanical damage and corrosion				Industry Standard	(✓) YES ( ) NO

[redacted] / 29 May 25

SYSTEM	TASK		Specification	Record/Reading
	Check and measurement boom foot pin and connection pins for clearance		Industry Standard	
	BOOM FOOT PINS & BOOM BOX CONNECTER PIN TOLERANCE	0.125 Inch (3mm)	Industry Standard	
	Boom Foot Pin Tolerance		Industry Standard	0.025 Inch
	Boom Box Connecter Pin Tolerance		Industry Standard	0.018 Inch
	Check connecting bolts of box boom loose, corrosion, wear, damage		OEM Manual	(✓) YES ( ) NO
	Lubricate boom foot pins and bushings		OEM Manual	(✓) YES ( ) NO
	Lubricate boom cylinder pins, bearings and bushings		OEM Manual	(✓) YES ( ) NO
	Boom function test angle/radius to correction **Note; The cylinder(s) mechanism shall be capable of elevating the boom from a minimum of zero degrees to the maximum recommended boom angle.		API RP 2C	(✓) YES ( ) NO
	Operation functional test and verify Boom Creeping down **Note ; Test at angle 60°		Industry Standard	(✓) YES ( ) NO As found No Creeping down
Wire Rope	Determine if parts-of-line match parts of line on the load chart in the crane cabin.		API RP 2D	(✓) YES ( ) NO
	Determine if visible portion of wire rope adequately lubricated. If not lubricate wire rope		API RP 2D	(✓) YES ( ) NO
	For each layer of wire rope on drum, check that all rope is parallel and each crossover point at hoist flanges is correct		API RP 2D	(✓) YES ( ) NO
	The top layer of rope must not be lower to the flange tips 2.5 in for Smooth drum,2 in for groove drum or 2.5 times of wire rope diameter		API RP 2C	(✓) YES ( ) NO
	Inspect wire rope for, kinking, crushing, broken wires, necking down of rope diameter, worn outside wires, corroded or broken wires at end connection, cutting or unstringing.		API RP 2D	(✓) YES ( ) NO As found Good
	NoteRunning Ropes of rotation-resistant construction used in the main or auxiliary Hoist: - Four (4) Randomly distributed broken wires within 30 rope diameter - Two (2) broken wires in one stand within 6 rope diameter		API RP2D Edition 7	(✓) YES ( ) NO As found Good
	One valley break can indicate internal rope damage requiring close inspection of this section of the rope. When one or more valley breaks are found in one lay length the rope should be retired.		API RP2D Edition 7	(✓) YES ( ) NO As found Good
	Reductions for the rope diameter, from initial wire rope dimensional measurements, in a nonworking area (an area away from the sheaves) compared to the lowest diameter of rope measured in three working areas (areas where the rope regularly goes over a sheave) of more than the following is observed: — 3/64 in. (0.047 in.) (1.2 mm) for diameters up to and including 3/4 in. (19.1 mm); — 1/16 in. (0.062 in.) (1.6 mm) for diameters of 7/8 in. to 1-1/8 in. (22.2 mm to 28.6 mm); — 3/32 in. (0.093 in.) (0.8 mm) for diameter of 1-1/4 in. to 1-1/2 in. (31.8 mm to 38.1 mm); — For rope diameters greater than 1-1/2 in., a 5 % diameter loss from baseline measurement. —Wear of one-third the original diameter of the outside individual wires.		API RP2D Edition 7	(✓) YES ( ) NO As found dimension Good
	Increase in the length of an individual rope lay is observed. This increase in lay length and accompanying reduction in diameter can be caused by failure of the core. This can occur more readily in ropes or rotation-resistant construction.		API RP2D Edition 7	(✓) YES ( ) NO As found Good
	-Inspection and Verify running and standing rope from heat effect **Note; Not more than 250°C -There is evidence of heat damage from any source (i.e. engine exhaust, flare towers, stress corrosion cracking, etc.). Heat can be generated by passing a rope over a frozen or non-turning sheave, contact with structural members of the crane, improperly grounded welding leads or lightning strikes		Industry Standard	(✓) YES ( ) NO As found Good
	With the boom at the highest possible angle and the main load block or overhaul ball at the water level, ensure there is a minimum of 5 wraps of wire-rope remaining on the drums. Note: (Thai law, requires minimum of 2 wraps)		API SPEC 2C / Thai Law	(✓) YES ( ) NO
	Reference: - Running rope safety factor not less than 6 for wire rope that are running wire, (Thai law; Wire rope nominal breaking strength x number parts of line / Design factor 6) - Standing rope safety factor not less than 3.5 for wire rope that are stay cables, (Thai law)		Thai Law	(✓) YES ( ) NO ( ) N/A
	Measure and record nominal diameter of "running ropes"main and auxiliary (particularly on drum, equalizer sheave and at sockets, clips and dead end points) *****Nominal = several measurements added together divided by Number of measurements*****		API RP 2D	(✓) YES ( ) NO
	Inspect wire rope and record dimension.		API RP 2D	
	MAIN WIRE ROPE OD:	FULL DRUM	OEM Manual	0.765 Inch
		HALF DRUM	OEM Manual	0.771 Inch
		WATER LEVEL	OEM Manual	0.770 Inch
	AUX WIRE ROPE OD:	FULL DRUM	OEM Manual	0.764 Inch
		HALF DRUM	OEM Manual	0.770 Inch
		WATER LEVEL	OEM Manual	0.775 Inch
	Slip-Cut 1 meter of all ropes at the wedge socket and re-wedge to prevent rust inside of wedge socket (at outward end of rope, not on hoist drum) Dead end tail length is never less than 6 inches, or: - Standard 6 to 8 Strand wire rope is not less than 7 times the rope diameter - Rotation Resistant Wire Rope is not less than 20 times the rope diameter		Company Spec/Standard	(✓) YES ( ) NO
	U-bolt and Fist Grip Clips: Extreme care should be exercised to assure proper orientation of U-bolt clips. The U-bolt segment shall be in contact with the wire rope dead-end. The orientation, spacing, torquing, and number of all clips shall be in accordance with the crane manufacture's specifications.		API SPEC 2C	(✓) YES ( ) NO
	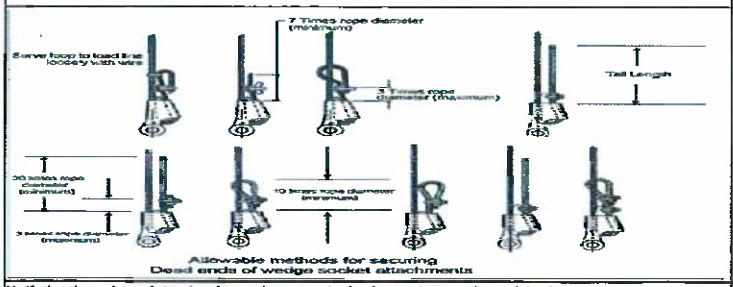		API SPEC 2C	Model ans Size wedge socket. Main hoist. Model WS 8 Size 3/4 Aux Hoist. Model WS 8 Size 3/4
	Verify that the wedge socket and wedge are the correct size for the rope in use and record the size		API SPEC 2C	(✓) YES ( ) NO
Sheaves & Bearings	Lubricate all sheave bearings.		API RP 2D	(✓) YES ( ) NO
	Visually inspect all sheaves and bushings for cracks, wear and deterioration		API RP 2D	(✓) YES ( ) NO As found Good
	Visually inspect wire rope track of sheave for rope imprints, wear and deterioration. If damage exist sheave should be resurfaced or replaced.		API RP 2D	( ) YES ( ) NO As found Good
	Pins retained by snap rings, bolt lock shafts, plates lock should be checked for missing or loose for all		API RP 2D	(✓) YES ( ) NO

[redacted] / 27 May 25

SYSTEM	TASK	Specification	Record/Reading
	Check wirerope guards and keepers for proper location and condition.	API RP 2D	(✓) YES ( ) NO
	Determine if wire rope is jumping the sheaves, by looking for signs of damage on the sheave brim	Industry Standard	(✓) YES ( ) NO
	Sheave Rope Profile for optimum Rope life the sheave groove profile should be correctly matched to the rope diameter	Industry Standard	(✓) YES ( ) NO
	Check rope sheave should be machine grooved to adepth of not less than 1.5 times the norminal diameter of the rope	Industry Standard	(✓) YES ( ) NO
	MAIN POINT SHEAVES: Note; On Standard	Industry Standard	No.1 (✓) YES ( ) NO No.2 (✓) YES ( ) NO
	AUX SHEAVES: Note; On Standard	Industry Standard	No.1 (✓) YES ( ) NO
	IDLER SHEAVES: Note; On Standard	Industry Standard	AUX. (✓) YES ( ) NO Main (✓) YES ( ) NO
	Pins for bronze bushing and straight roller bearing should have a running clearnace of .031 inch/ sheave of end play and should be adjusted accordingly.(count from left)	Industry Standard	(✓) YES ( ) NO
	MAIN POINT SHEAVES:	Industry Standard	Sheave No.1 0.005 inch Sheave No.2 0.005 inch
	AUX SHEAVES:	Industry Standard	Sheave No.1 0.002 ... inch
	IDLER SHEAVES:	Industry Standard	Sheave AUX 0.005 inch. Sheave Main 0.002 inch.
	Ensure the sheaves are aligned and the fleet angle is correct **Remark ; Wire rope User's Manual allows 2 degree on grooved winch drum, Smooth Drum shuold be not more than 1-1/2 degree	API RP 2D	(✓) YES ( ) NO
	Determine if wire rope size and sheave sizes/grooves are compatible and record size. Sheave pitch diameter (D) to nominal wire rope diameter (d) ratio (D/d) shall not be less than 18:1	API SPEC 2C	(✓) YES ( ) NO
	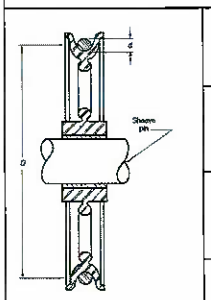 MAIN POINT SHEAVES: — SHEAVE D / WIRE ROPE d = >18	API SPEC 2C	18 inch (D) 3/4 inch (d) 24 (Ratio D/d)
	AUX SHEAVES: — SHEAVE D / WIRE ROPE d = >18	API SPEC 2C	14 inch (D) 3/4 inch (d) 19 (Ratio D/d)
	IDLER SHEAVES: — SHEAVE D / WIRE ROPE d = > 18 (If applicable)	API SPEC 2C	18 inch (D) 3/4 inch (d) 24 (Ratio D/d)
	MAIN BLOCK SHEAVES: — SHEAVE D / WIRE ROPE d = > 16	API SPEC 2C	16 inch (D) 3/4 inch (d) 22 (Ratio D/d)
Load Block	Load Block: Check the load block for cleanliness, binding sheaves, damaged or worn sheaves, worn or distorted sheave pins, broken bolts, and worn cheek weights. Note ;	Industry Standard	(✓) YES ( ) NO As found Good
	Hook: Check the hook damage, excessive wear to the hook safety latch, hook swivel trunnions, thrust collar, securing, damage or missing lubrication fittings, proper lubrication, cracks and gouges, and if visibly bent or twisted or has been exposed to welding or arching. Note ;	Industry Standard	(✓) YES ( ) NO As found Good
	Hook: Tip has been bent more than 10 degree out of plane from the hook body	Industry Standard/API RP2D7	(✓) YES ( ) NO As found Good
	Inspect the Pins for bronze bushing and straight roller bearing should have a running clearnace of .031 inch/ sheave of end play and should be adjusted accordingly	Industry Standard	(✓) YES ( ) NO
	Inspect Hook or shackle to swivel case clearance is set at .031 to .062 inch, Clearance exceeding .12 to .18 (ONLY CROSBY BRAND)	OEM Crosby	(✓) YES ( ) NO
	OEM STANDARD RECOMMEND that Crane block removal from service untill replaced and repair following below	OEM STANDARD	
	- Elongated center pin and hook trunnion holes exceeding 5% of Original diameter	OEM STANDARD	(✓) YES ( ) NO As found On Standard
	-Material loss due to wear exceeding 10% of original section	OEM STANDARD	(✓) YES ( ) NO As found On Standard
	-Sheave wire rop groove diameter smaller than 2.5%	OEM STANDARD	(✓) YES ( ) NO As found On Standard
	Loosened tie bolts nuts, center pin round nuts, check weight cap screws and hook nut cap screws. Tie bolt nuts to be torqued to 35-40 ft.Lbs and restaked, all other fasteners wrench tight	OEM STANDARD	(✓) YES ( ) NO
	Throat opening - any distortion causeing an increase in throat opening of 5% not ot exceed 1/4 in. (6 mm.)(or as recommended by the manufacturer)	ASME B30.10	(✓) YES ( ) NO
	Inspect rope track worn in sheave groove, sheave must be resurface or replace	API RP 2D	(✓) YES ( ) NO
	Ensure the load block is not using "Cast Iron" check weights they can not be used as per API	API SPEC 2C	(✓) YES ( ) NO As found
	Determine if all hooks are equipped with properly operating safety latches and check for proper functioning	API RP 2D	(✓) YES ( ) NO
	Lubricate sheave bearings and swivels	OEM Manual	(✓) YES ( ) NO
	Re-thighten nut firmly to point at which trunion will just rotate, the Re-tighten set-screw in nut and thread condition as in the picture below,	Industry Standard	(✓) YES ( ) NO
	Last NDE inspection record	Industry Standard	Last inspect date
	RECORD LOAD BLOCK INFORMATION : Manufacturer:	OEM Manual	MISSICK
	Model:	OEM Manual	M035 P16 E H
	Serial Number:	OEM Manual	D36909
	Record Load block measurements and details for future comparison with historical data ☑	Industry Standard	(✓) YES ( ) NO

[redacted] / 29 May 28

SYSTEM	TASK		Specification	Record/Reading
	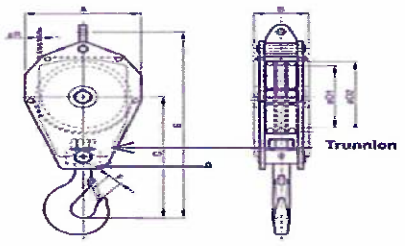	A - Block OD	Industry Standard	19.5 mm/ inch
		B - Block length	Industry Standard	43 mm/ inch
		C - Center of Pin to hook Saddle	Industry Standard	31.5 mm/ inch
		D1 - Sheave Diameter	Industry Standard	16 mm/ inch
		E - Block Width	Industry Standard	34 mm/ inch
		F - Throat Opening	Industry Standard	7.0 mm/ inch
		G - Trunnion	Industry Standard	0.050 mm/ inch
Auxiliary Ball	Inspect Auxiliary ball for cleanliness, binding swivel, work pad-eye hole. Inspect the hook damage, excessive wear to the hook safety latch, Bent connector plates,Severe corrosion pitting, hook swivel trunnions, thrust collar, securing, damage or missing lubrication fittings,Loose, missing or damaged retaining nuts, cotter pins or swivel set screws ,Missing or illegible rating and warning tags, proper lubrication, cracks and gouges, and if visibly bent or twisted or has been exposed to welding or arching.		Industry Standard	(✓) YES ( ) NO
	Hook: Tip has been bent more than 10 degree out of plane from the hook body		Industry Standard/API RP2D7	(✓) YES ( ) NO
	OEM STANDARD recommend that Crane overhaul ball removal from service untill replaced and repair following below		OEM STANDARD	
	- Elongated ball pin holes, hook latch pin holes and swivel eye exceeding 5% of original diameter,		OEM STANDARD	(✓) YES ( ) NO As found On standard
	-Swivel end play gap exceeding .08". Excessive end play indicates damaged internal set screw		OEM STANDARD	(✓) YES ( ) NO As found On standard
	-Material loss due to wear exceeding 10% of original section		OEM STANDARD	(✓) YES ( ) NO As found On standard
	Throat opening - any distortion causeing an increase in throat opening of 5% not ot exceed 1/4 in. (6 mm.)(or as recommended by the manufacturer)		ASME B30.10	(✓) YES ( ) NO
	All hooks that lift personnel are to have a positive locking safety latch **locking Pin to be used while lifting personnel**		API RP 2D	(✓) YES ( ) NO
	*** Temperature Effected : When hooks are to be used at temperature above 400° F. (204°C) or below -40°F (-40°C), the hook manufacturer or a qualified person should be consulted *** Chemically Active Environment : The strength of hooks can be affected by chemically active environments, such as caustic or acid substances or fumes. The hook manufacturer or qualified person should be consulted before hooks are used in chemically active environment		ASME B30.10	
	Verify to ensure nut firmly at which trunion rotate. Identify to set-screw in nut/ swivel/ counter pin and thread condition.		Industry Standard	(✓) YES ( ) NO
	Last NDE inspection record		Industry Standard	Last inspect date_____
	RECORD AUX BALL INFORMATION :	Manufacturer:	OEM Manual	McKISSICK
		Model:	OEM Manual	MB07T200E
		Serial Number:	OEM Manual	0361623
	Record Auxiliary Ball measurements and details for future comparison with historical data: For Model MB07T200E ONLY		Industry Standard	
	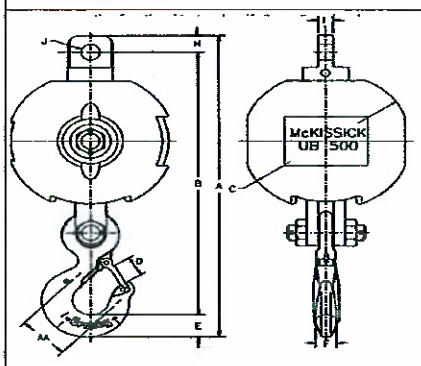	AA Dimensions 3.0 Inch	Industry Standard	3.0 mm/ inch
		A Dimensions 24.89 Inch	Industry Standard	24.8 mm/ inch
		B Dimensions 21.71 Inch	Industry Standard	21.7 mm/ inch
		C Dimensions 12.50 Inch	Industry Standard	12.5 mm/ inch
		D Dimensions 1.61 Inch	Industry Standard	1.6 mm/ inch
		E Dimensions 1.81 Inch	Industry Standard	1.8 mm/ inch
		F Dimensions 1.38 Inch	Industry Standard	1.0 mm/ inch
		H Dimensions 1.38 Inch	Industry Standard	1.4 mm/ inch
		I Dimensions 0.88 Inch	Industry Standard	0.8 mm/ inch
		J Dimensions 1.31 Inch	Industry Standard	1.3 mm/ inch
Safety system	Check Condition anti - two block , hanging chain ,eye bolts , fix bolts , shackle for missing , corrosion , erosion , deformation		API RP 2D	(✓) YES ( ) NO
	Check anti - two block kick out plate for freely movement		Company Spec/Standard	(✓) YES ( ) NO
	Check anti-2-block device proper function of Main winch		Company Spec/Standard	(✓) Function ( ) False
	Check anti-2-block device proper function of Aux. winch		Company Spec/Standard	(✓) Function ( ) False
	Check relation of boom radius and boom angle (lowest, middle, highest) with refrence to load chart. Recharge fluid W-15 to load indicator, if required.		API RP 2D	(✓) YES ( ) NO
	Functional test of emergency lowering system (See procedure in Emergency Load Lowering Box). Note: Keep for 1 Yr PM to sustain crane mechanic competency. Caution: Function test must be performed on top deck with max 2-foot height.		Company Spec/Standard	(✓) YES ( ) NO ( ) N/A
	Visually check emergency load lowering kit. Ensure EMERGENCY LOWERING PROCEDURE and MATERIAL LIST are in the box. - Ensure ALL items shown on the list are in the box and in good condition - SECURE THE BOX WITH A TIE WRAP.		Company Spec/Standard	(✓) YES ( ) NO ( ) N/A
Slew Mechanism	Visually check for damage and excessive wear on gear teeth		OEM Manual	(✓) YES ( ) NO
	Visually check slew gear box in the area of oil seal for any leaks		API RP 2D	(✓) YES ( ) NO
	RECORD SLEW GEAR BOX INFORMATION :	Manufacturer:	OEM Manual	ESK
		Model:	OEM Manual	250A01C4-51
		Serial Number:	OEM Manual	–
	CHECK and RE-TORQUE swing drive gearbox mounting bolts at following brands: - ESKRIDGE, Model: 250 = 150 FT-LBS		API RP 2D	(✓) Yes ( ) No
	Check swing gearbox oil level/condition, top up if required		OEM Manual	(✓) YES ( ) NO
	Monitor slew gearbox oil condition by visually examine for burnt smell, metal particles, and/or other contaminants, record and change if found.	Meropa 220	OEM Manual	(✓) CHANGE OIL ( ) NOT CHANGE OIL

[redacted] / 25 May 25

SYSTEM	TASK	Specification	Record/Reading
	Change slew gear box oil	OEM Manual	(✓) CHANGE OIL ( ) NOT CHANGE OIL
	Grease all pivot points of slew ring (bearing)	OEM Manual	(✓) YES ( ) NO
	Grease open gears (pinion)	OEM Manual	(✓) YES ( ) NO
	Rotate crane 360 degree and check smoothness of operation	OEM Manual	(✓) YES ( ) NO
	Check swing drive static parking brake for proper operation Caution: DO NOT stop the swing of the crane with this static brake (parking brake)	OEM Manual	(✓) YES ( ) NO
	Check swing drive dynamic parking brake for proper operation	OEM Manual	(✓) YES ( ) NO
	Check swing lock mechanism condition; corrosion ,dent , loos all part,worn and wear	OEM Manual	(✓) YES ( ) NO As found condition Good
	Check swing lock mechanism freely lock and unlock for function. **Check and inspect for hydraulic for leaks on actuator model.**	OEM Manual	(✓) YES ( ) NO As found condition Good
	Check condition of slew ring bolts e.g. Bolt grade and washers. Caution: Use only hardened flat washers under head of bolt. Do not use lock washers, or regular flat washers.	Industry Standard	(✓) YES ( ) NO As found condition Good
	Monitor ball-ring grease sample. If found wear and tear particles, take sample and send to lab. **Wear assessment by grease sample analysis—wear may be monitored by periodic grease sample analysis as describe in this section. Grease samples should be collected every twelve months as a minimum and the results of the analysis recorded; this period should be shortened if obvious metal or contaminants are present.	API PR 2D	( ) SEND TO LAB (✓) NOT SEND TO LAB As found No contaminants
	Verify crane condition and load test as separate procedure. **Table 1—Static/Onboard Test Load and Radius** Static/Onboard Rated Load at a Specific Radius lb (kg) / Test Loads in Excess of Static/Onboard Rated Load at a Specific Radius ≤ 40,000 (18,144) / 25 % > 40,000 ≤ 100,000 (>18,144 ≤ 45,356) / 10,000 lb (4536 kg) > 100,000 (45,356) / 10 %	API 2C	(✓) YES ( ) NO Specific test load 6,612 lbs.
	Verify crane condition and load test as separate procedure. " Record crane load test in load test form."	Company Standard	(✓) YES ( ) NO

Risk Level Definitions: The following 3 levels indicate the impact the noted deficiency poses to the operation or structural integrity of the equipment:

Level 1 = Incidental	Level #2 = Restricted Operation	Level #3 =Out of Service
Minor deficiency that is recommended to be promptly addressed, but poses no safety and/or environmental risk. The crane can still be operated at full duty.	Deficiency identified that has the potential to limit, de-rate or damage the crane, its surroundings and/or the environment. The duty and locked/ tagged out until the crane's duty and operation should be de-rated or service restricted.	The crane should be removed from duty and locked/ tagged out until the deficiency is rectified.

System:	Risk Level:	Component:		In Accordance with:	
		Location:		Date Originated:	
Description:	Air filter is clogged				
Recommended Action:					
Recommended urgency timeframe for corrective action:	Next Plan	Completed Date:		Completed By:	

System:	Risk Level:	Component:		In Accordance with:	
		Location:		Date Originated:	
Description:					
Recommended Action:					
Recommended urgency timeframe for corrective action:		Completed Date:		Completed By:	

System:	Risk Level:	Component:		In Accordance with:	
		Location:		Date Originated:	
Description:					
Recommended Action:					
Recommended urgency timeframe for corrective action:		Completed Date:		Completed By:	

System:	Risk Level:	Component:		In Accordance with:	
		Location:		Date Originated:	
Description:					
Recommended Action:					
Recommended urgency timeframe for corrective action:		Completed Date:		Completed By:	

System:	Risk Level:	Component:		In Accordance with:	
		Location:		Date Originated:	
Description:					
Recommended Action:					

[redacted] / 27 May 25

SYSTEM	TASK		Specification		Record/Reading
Recommended urgency timeframe for corrective action:		Completed Date:		Completed By:	

System:	Risk Level:	Component:		In Accordance with:	
		Location:		Date Originated:	
Description:					
Recommended Action:					
Recommended urgency timeframe for corrective action:			Completed Date:	Completed By:	

Job Completed By

[redacted]

26 May 25

THE PEDESTAL CRANE CONDITION VERIFICATION

Date : 26 May 25			
Crane Owner : CTEP/ COTL Field: BENCHAMAS Platform/ Vessel: BEWJ			
Crane Owner 's representative : (Mech Supv./ M'Dent)			
Qualified Inspector : (Qualified Crane Mechanic)			
Inspector 's company / agency : (Third Party or Outsource to witness if applicable)			
Manufacture Nautilus Fabrication by Oilstates Year of Fabrication April 2003 Country USA Model / Serial 1808 - 80 Standard API Edition FIFTH 1995			Remark
Safe Working Load (SWL) —> OEM	17.76 Metric Tonnes		
Safe Working Load (SWL) —> Existing via MOC, if applicable	— Metric Tonnes		
Boom length, Main	80 Ft		
Boom length, Auxiliary if applicable	— Ft		
Part of line main hoist	4 Part line		
Part of line auxiliary hoist	1 Part line		
Safe Working Load at longest boom radius	80 ft	5.45 Metric Tonnes/ ~~lbs~~	
Safe Working Load at shortest boom radius	13.55 ft	17.76 Metric Tonnes/ ~~lbs~~	
The document of crane specification for Testing , Maintenance and Inspection are provided by:	OEM	MOC / Crane Engineer	
Has the crane ever been modified by MOC ? (To verify if this crane is modified with MOC –> Allow to test the crane. If this crane is modifed without MOC –> Not allow to test the crane)	YES	NO	(Employers are not allowed to modify or adjust any part of cranes or dericks or consent to other persons to do these things, that might reduce the safety of the employees who work with the cranes or derricks).
Does the rotating part have proper guard in place?	YES	NO	(Need mitigation plan)
Is the ladder and hand rail in place?	YES	NO	(Need mitigation plan)
Is the maintenance platform in place?	YES	NO	(Need mitigation plan)
Is the SWL tag labelled on crane pedestal, main block or aux ball?	YES	NO	(Need mitigation plan)
Verify if the crane major component damaged or not	YES (Need to repair or mitigate unsafe condition with MOC before testing)	NO	(Employers shall not allow employees work with damaged/ unsafe cranes or derricks)
Inspect boom end connections, for bends, dents, corroded areas, cracked welds, and signs of mechanical damage, wear, etc. **any deviation should be reported** Level 1 = Incidental : Minor deficiency that is recommended to be promptly addressed, but poses no safety and/or environmental risk. The crane can still be operated at full duty. –> Allow to test Level #2 = Restricted Operation: Deficiency identified that has the potential to limit, de-rate or damage the crane, its surroundings and/or the environment. The duty and locked/ tagged out until the crane's duty and operation should be de-rated or service restricted. –> To be derated Level #3 = Out of Service;The crane should be removed from duty and locked/ tagged out until the deficiency is rectified. –> Not Use	YES (To be verified)	NO	
Function Load Testing			
1. Verify Crane SWL (Existing)	3.0 Metric Tonnes		
2. Verify routine maximum actual load.	2.4 Metric Tonnes		
3. Select the specimen load to be more than actual routine load 1.25 times but not more than SWL. Example # 1 : Crane 's SWL is 18 Metric Tonnes. The routine maximum actual load is 2.4 Metric Tonnes. Therefore, the load testing shall be 2.4 x 1.25 = 3 Metric Tonnes. Example # 2 : Crane 's SWL is 18 Metric Tonnes. The routine maximum actual load is 16 Metric Tonnes. By calculation, the load testing is 16 x 1.25 = 20 Metric Tonnes more than SWL (18 MTon). **Therefore, the load testing shall be 18 Metric Tonnes equal to SWL.**	3 Metric Tonnes		
4. Use Auxiliary Winch if specimen load less than or equal 3 Metric Tonne	YES	NO	
5.Use Main Winch if specimen load more than 3 Metric Tonne	YES	NO	
6. The record of load testing : Fill in "Function Test Record" sheet attached.			

WO. 1249336

CRANE Mfg. : Nautilus
MODEL: 180B1-80 (MS)
SERIAL NUMBER :

LOCATION: BEWT

DATA BASE - PM JOB TASK CARD

Crew Size: 2
Estimated Hours:

SYSTEM	TASK		Specification	Record/Reading
Safety	Perform Job Safety Analysis (JSA)		Company Spec/Standard	(✓) YES ( ) NO
	Obtain "COMPANY" PERMIT TO WORK		Company Spec/Standard	(✓) YES ( ) NO
	Perform Tool Box Talk		Company Spec/Standard	(✓) YES ( ) NO
	BEFORE/AFTER JOB EXECUTION: Ensure to comply with isolation procedure (LOCK OUT/TAG OUT, WARNING SIGNS and BARRIERS).		Company Spec/Standard	( ) YES ( ) NO
Required Tools	Insure proper tools are available at the job site		Company Spec/Standard	(✓) YES ( ) NO
	Tool bag		Company Spec/Standard	(✓) YES ( ) NO
	Tool box		Company Spec/Standard	(✓) YES ( ) NO
	Tool Container		Company Spec/Standard	(✓) YES ( ) NO
	MPI equipment and operator		Company Spec/Standard	( ) YES (✓) NO
	Check safety harness Software and Hardware should be good condition before use		Company Spec/Standard	(✓) YES ( ) NO
	Check Rescue Equipment ready to use onsite		Company Spec/Standard	(✓) YES ( ) NO
	Portable Scaffolding and Crew if require		Company Spec/Standard	(✓) YES ( ) NO
Lubricants	Insure proper lubricants and consumables are available at the job site.		Company Spec/Standard	(✓) YES ( ) NO
	Hydraulic System - Hydraulic Oil	Rando HD-68	OEM Manual	(✓) YES ( ) NO
	Slew Gearbox - Gear Oil	Meropa 220	OEM Manual	(✓) YES ( ) NO
	Auxiliary Hoist - Gear Oil	Meropa 220	OEM Manual	(✓) YES ( ) NO
	Main Hoist - Gear Oil	Meropa 220	OEM Manual	(✓) YES ( ) NO
	Grease Points - Lithium Based **IT MUST NOT INCLUDE MOLYBDENUM DISULPHIDE**	MULTIFAK EP#2	OEM Manual	(✓) YES ( ) NO
	Open Gear Teeth - Open Gear Lube highly water resistant and of an adhesive nature.	OMEGA 73	OEM Manual	(✓) YES ( ) NO
	Wire rope Lubricant Company preferred grade	Birlube 70	OEM Manual	(✓) YES ( ) NO
	Engine Oil - SAE Grade 15W-40 (Delo Gold)	15W-40	OEM Manual	(✓) YES ( ) NO
	Safe Load Indicator fluid	W-15	OEM Manual	(✓) YES ( ) NO
	Engine Radiator - Should have radiator preservatives additives	Cat® SCA	OEM Manual	(✓) YES ( ) NO
Consumables	Spray Cold Galvanize		Company Spec/Standard	(✓) YES ( ) NO
	Denso Tape		Company Spec/Standard	(✓) YES ( ) NO
	WD-40		Company Spec/Standard	(✓) YES ( ) NO
History Review	Before starting work, tasks preparation at least 1 day prior to starting work: 1. Review history PM/ CM from Roving Team, 2. Review last PM/ CM/ PMI from Crane Mech, 3. List out all punch list and prepare parts. 4. Review last Certificate task performed		API RP 2D	(✓) YES ( ) NO
	Require to update part history from Crane Mech on following main compenents to ensure the right parts are prepared: - Aux/ Main/ Boom Cylinder, Engine, Swing Gearbox, etc. Reference: Crane OEM information of each part need to be recorded - Manufacturer & Contact info - Model & serial number - Installation date		Company Spec/Standard	(✓) YES ( ) NO
	Review history data from Certificates and incorporate into current PM: - Pull Test Certificates (ongoing update, 4 yr. history). - Load Test Certificates (ongoing update, 4 yr. history). - Wire Rope Certifications (running rope and standing rope) (life of rope). - Hoist Certifications for hoist classified as "personnel handling" hoist.		API RP 2D	(✓) YES ( ) NO
	Review Last Preventative Maintenance Records (Inspection Reports) - Pre-use (Pre-Post Inspection) - 6 Monthly (API RP 2D Not Defined, Company Standard) - 1 Yearly (API RP 2D Defined Annual Inspection)		API RP 2D	(✓) YES ( ) NO
Lifting Gear Preparation	Visually inspect (Sling, sling hooks and shackles) include Webbing / Chain		Company Spec/Standard	(✓) YES ( ) NO
	Check color code / Tag & date inspection		Company Spec/Standard	(✓) YES ( ) NO
General	Determine if access route to-from crane is clean, safe, unobstructed and adequately protected against falls, tripping and slipping		Company Spec/Standard	(✓) YES ( ) NO
	Check drain lines and drip pans for deterioration		API RP 2D	(✓) YES ( ) NO
	Remove any sediment collected in the bottom of drip pans		Industry Standard	(✓) YES ( ) NO
	Check for general crane and components for loss of protective coating and corrosion		Industry Standard	(✓) YES ( ) NO
	Check for missing or loose ,corrosion, deformation pins, pin keepers, bolts, nuts, fasteners of all laders, cages and working platform		API RP 2D	(✓) YES ( ) NO
	Apply grease to exposed grease parts (control valve spools, ball-ring gear, parking brake valve, etc.)		OEM Manual	(✓) YES ( ) NO
Prime Mover	Engine Caterpillar		OEM Manual	( ) YES ( ) NO
	CATERPILLAR MODEL 3216	S/N.:	OEM Manual	4ZR03960
		AR.No.:	OEM Manual	139-4393
	Change engine lube oil & oil filter and check the condition of old oil. As found ; Not Contaminants		OEM Manual	(✓) YES ( ) NO
	Check diesel tank level, top up if required.		OEM Manual	(✓) YES ( ) NO
	Check / Clean crankcase breather cap. Change if required		OEM Manual	(✓) YES ( ) NO
	Check / Clean air cleaner filter, Replace if require. (Note : Include inspect air cleaner housing)		OEM Manual	(✓) YES ( ) NO
	Check condition and inspect of the radiator and cap.		OEM Manual	(✓) YES ( ) NO
	Check for any signs of leaks on or around the engine is; Crankshaft seal for front & rear seal , Engine oil cooler. As found; Good		OEM Manual	(✓) YES ( ) NO
	Check condition exhaust system for leaks, corrosion, insulation and general. As found ; Good		OEM Manual	(✓) YES ( ) NO
	Check condition of all engine hoses and tube. (Fuel supply,Cooling system and Lube oil system. As found; Good		OEM Manual	(✓) YES ( ) NO
	Drain water and sediment form diesel tank. As found ;		OEM Manual	( ) YES ( ) NO
	Check / Clean Diesel tank level sightglass and diesel tag.		OEM Manual	(✓) YES ( ) NO
	Apply grease of fan bearing/shaft.		OEM Manual	(✓) YES ( ) NO
	Check and inspect the vibration damper and pulley. As found ; Good		OEM Manual	(✓) YES ( ) NO
	Change water coolant and check condition base of water coolant and record PH.		OEM Manual	(✓) YES ( ) NO
	COOLANT PARAMETERS (PH):	6 or higher	OEM Manual	PH =
	HOUR METER PARAMETERS:	LAST READING 833 HRS	OEM Manual	1057 HRS
	Check and retighten the bolts of all engine base. / Inspection mouting rubber. As found ; Good		OEM Manual	( ) YES ( ) NO
	Inspect the engine fan blades that there is a break is it severely distorted or rusted. As found ; Good		OEM Manual	( ) YES ( ) NO
	Change and adjust the tension engine belts. Remark: To check belt Tension, after has engine run more than 30 minules apply 400 N (90 lbs) of force midway between the pulleys. Correctly adjusted belts with deflect 13 to 19 mm (1/2 to 3/4 inch).		OEM Manual	( ) YES ( ) NO

[redacted] / 15 Apr 25

SYSTEM	TASK			Specification	Record/Reading
	Check engine HYD starter drive gear bendix and fly wheel gear teeth condition and record. **Replace if required"			OEM Manual	(✓) YES ( ) NO Bendix Gear : 95 % Fly wheel Gear teeth : 95 %
	Check and inspect condition the Bendix of hydraulic Starter motor.			OEM Manual	(✓) YES ( ) NO
	Lubricate and check engine throttle system.			OEM Manual	(✓) YES ( ) NO
	Determine if the tachometer operates properly: Record Value of Idle & Max Speed (RPMs) Note: Too low Idle (RPMS) will cause excessive worn at winch brake			OEM Manual	
	ENGINE RPM SPECIFIC	IDLE SPEED	850-950 RPM	OEM Manual	850 RPM
		MAX SPEED	2200 RPM	OEM Manual	2200 RPM
	Confirm engine oil pressure as per Parameters below and Record Value:			OEM Manual	
	ENGINE OIL PRESSURE SPECIFIC	Minimum	Not lower then 30 PSI	OEM Manual	40 PSI
		Maximum	70 PSI	OEM Manual	70 PSI
	Confirm engine fuel pressure Parameters are correct and Record Value:			OEM Manual	
	ENGINE FUEL PRESSURE SPECIFIC** ***Note;Fuel pressure at high idle is lower than 105 kPa (15 psi)RAMETERS*	Normal	Green Range/ 15 PSI	OEM Manual	(✓) YES ( ) NO
	Confirm engine temperature Parameters and Record Value:			OEM Manual	
	ENGINE WATER TEMP SPECIFIC	NORMAL	120 - 180 degrees F	OEM Manual	175 F
	Test engine SAFETY DEVICE- ensure engine kill cable shuts off FUEL supply			API RP 2D	(✓) Function ( ) False
	Test engine SAFETY DEVICE- ensure EMERGENCY KILL CABLE - shuts off AIR supply			API RP 2D	(✓) Function ( ) False
	Test engine SAFETY DEVICE- ensure ENGINE low lube oil - releases OIL PRESSURE to ctivate Alarm Air System ****Note*** Engine oil pressure low alarm at 20 PSI*			Company Spec/Standard	( ) Function ( ) False
	Test engine SAFETY DEVICE- ensure HIGH TEMP - releases OIL PRESSURE to activate Alarm Air System			Company Spec/Standard	( ) Function ( ) False
	Change water separator filter.			OEM Manual	(✓) YES ( ) NO
	Check the general conditionand functioning of turbocharger. Note;			OEM Manual	( ) Leak (✓) Not Leak
	Change fuel filter and inspect the primary hand pump.			OEM Manual	(✓) YES ( ) NO
	Check general condition the Governor and control linkage. (Inspect the throttle linkage)			OEM Manual	(✓) YES ( ) NO
	Check or adjust the engine valve lash. (Intake vale = 0.015", Exhaust valve = 0.025")			OEM Manual	(✓) YES ( ) NO
	Check or adjust the fuel timing control linkage of Unit Injector (CAT 3126) Reference: Fuel timing injection length, use the following references to obtain information: - Engine Information Plate (located at valve cover) Specific data 65.19 mm/inch. Engine S/N 9ZR05960 - TMI (Technical Marketing Information - located at Manual Book) - Fuel setting and related Information Fiche			Company Spec/Standard	65.19 mm/ inch (After Adjustment)
	Check condition wear of pump drive spline and record ***Note; Remaining 70% of Original Spline Surface must be replace.*			Company Spec/Standard	90 % Remaining
	Check condition wear of adaptor Coulping spline shaft and record ***Note; Remaining 70% of Original adaptor Coulping spline shaft Surface must be replace.*			Company Spec/Standard	90 % Remaining
	Check condition wear of Coulping spline and record. Re-tigthen of all lock bolts. ***Note; Remaining 70% of Original adaptor Coulping spline shaft Surface must be replace.*			Company Spec/Standard	90 % Remaining
Hydraulic Start System (Apply for C2-Remote P/F Only)	Check pressure system at the pressure gauge which should reach 3,000 PSI as standard when the system is FULLY charged. Record Value. (As the system cools down, the pressure should drop slightly and finally stabilised.)			OEM Manual	(✓) YES ( ) NO
	Visually inspect all hydraulic connections and hoses for leaks and retighten if necessary. (Caution: This should NOT be done if the system is under pressure.) 1. Slowly release system pressure by loosening the bleed screw on top of the hand pump. 2. Ensure no pressure remains, retighten the suspected leak fitting or replace the damaged hose or component. 3. Retighten the bleed screw on the hand pump. 4. Pump the system up to 2200 - 2600 PSI 5. Inspect that the leak was eliminated.			OEM Manual	(✓) YES ( ) NO
	Function check Accumulator Pre-charge. (Caution: This should NOT be done if the system is under pressure.) 1. Shut the engine off, release system pressure via the bleed screw on top of the hand pump 2. Retighten bleed screw and actuate the hand pump. The pressure will rapidly increase and then stabilised. This pressure is related to accumulator gas pre-charge pressure. 4. If the pressure rapidly increase to 3000 PSI, it indicates that the accumulator has lost its gas charge. 5. Troubleshoot as necessary			OEM Manual	(✓) YES ( ) NO
	Check function rechaging system by function boom down while the engine running. 1. The crane engine is running at 1,000-1500 RPM. 2. Slowly control lever boom function down for charging pressure to accumulator. 3. This pressure should read on prssure gauge between 2200 - 2600 PSI depending on the recharge ratio 80% std. (90% optional). Record Pressure Value.			OEM Manual	2600 PSI
	Check Nitrogen pressure in Accumulator ***Note**spec @ 1,500 psi as follow schematic and if found pressure loss below 1400 PSI then prepare recharge nitrogen in system			OEM Manual	1500 PSI
Pneumatic System	Check for noisy compressor operation, which could indicate a worn drive gear coupling, a loose pulley or excessive internal wear			OEM Manual	(✓) YES/N/A ( ) NO
	Check Air Compressor external oil supply and return lines, if applicable, for kinks, bends, or restrictionsto flow			OEM Manual	(✓) YES/N/A ( ) NO
	Inspect the Air compressor discharge port, inlet cavity and discharge line for evidence of restrictions and carboning. (If excessive buildup is noted)			OEM Manual	(✓) YES/N/A ( ) NO
	Check all hose connections are sound and all mounting and pivoting connections are secure.			OEM Manual	( ) YES ( ) NO
	Check condition / Clean and lubricate unloading valve			OEM Manual	( ) YES ( ) NO
	Check proper air pressure is available for the system. Record Value.			OEM Manual	
	AIR SYSTEM PARAMETERS:		MAX 60 PSI	OEM Manual	PSI
	Visually inspection condition of air receiver for signs of corrosion or loose of structural integrity.			Industry Standard	( ) YES ( ) NO
	Check the hose, piping and tubing for mechanical damage, corrosion, splits, blisters, cracking or excessive abrasion on the outer surface			Industry Standard	( ) YES ( ) NO
	Drain off air filter and reciever to remove condensed water. If water is present, drain until water is removed.			Industry Standard	( ) YES ( ) NO
	Check proper operation of pop off valve, by manually functioning valve.			Industry Standard	( ) YES ( ) NO
	Check proper operation of manual latch valve, by manually functioning latch.			Industry Standard	( ) YES ( ) NO
	Check proper operation of small engine alarm horn.			Industry Standard	( ) YES ( ) NO
Hoist / Brakes	Visually check a hoist exhibits erratic operation and/or unusual noise, the hoist must be taken out of service until it is inspected and serviced by a qualified technician. Continued operation of a hoist with a defect in a critical component may lead to loss of load control, property damage, serious injury or death.			OEM Manual	(✓) YES ( ) NO
	Visual exteriors of hoist, frames, drums and flanges for damage, leaks, cracks and wear and repair/replace as required to maintain the structural integrity of the hoist.			OEM Manual	(✓) YES ( ) NO
	Check all hoist mounting pins, bolts or other fasteners and replace or tighten as necessary.			OEM Manual	(✓) YES ( ) NO
	Lubricant level must be maintained between the minimum and maximum levels; midway up sight glass or at bottom of level plug port as equipped and check/clean plug vent. Use only the recommended type of lubricant.			OEM Manual	(✓) YES ( ) NO
	Inspect Brake Valve Opening Pressure test (Air 1.1 (4" PD Feder) no lower than 550 PSI		Main	Rexroth Bulletin 527 Rev. 1996	500 PSI

[redacted] / 15 Apr 25

SYSTEM	TASK			Specification	Record/Reading
	V/V 1-1/4" PD Series : no lower than 550 PSI V/V 1-1/2" CH Series : no lower than 575 PSI		Aux	Braden Bulletin 527-Dec,1996	550 PSI
	Inspect Brake cylinder opening pressure test. CH/PD Series : 400-450 PSI.		Main	Industry Standard	400 PSI
			Aux		400 PSI
	Measure differancian of static and dynamic brake. CH/PD Series : 150-250 PSI.		Main	Industry Standard	~~100~~ 100 PSI
			Aux		150 PSI
	Check for external oil leaks and repair as necessary. This is extremely important due to the accelerated wear that will result from insufficient lubricating oil in the hoist.			OEM Manual	(✓) YES ( ) NO
	RECORD BOOM CYLINDER INFORMATION :		Boom cylinder Diameter:	OEM Manual	DIA: 12 Inch
			CY Number:	OEM Manual	L= 3108-4 R= 3108-1
			Serial Number:	OEM Manual	L= 10087 R= 10084
	RECORD MAIN HOIST INFORMATION :		Manufacturer:	OEM Manual	Braden
			Model:	OEM Manual	CH75A-13000-02-1
			Serial Number:	OEM Manual	0500847
	Check MAIN HOIST for proper operation and good condition			API RP 2D	(✓) YES ( ) NO
	Brake test & record pressure of MAIN HOIST.			OEM Manual	(✓) YES ( ) NO As found On Manual!
	Change main hoist gear oil and inspect for small particles in the old oil. ** Refer to Onsite Gear Oil Sample Procedure ** ** Replace and send oil sample to SKL if abnormal ** ** Take photo of Oil Sampling for Reference**			OEM Manual	(✓) YES ( ) NO As found Not Contaminated
	RECORD AUXILIARY HOIST INFORMATION :		Manufacturer:	OEM Manual	Braden
			Model:	OEM Manual	PD12C-13000-02-1
			Serial Number:	OEM Manual	1264330
	Check AUXILIARY HOIST for proper operation and good condition			API RP 2D	(✓) YES ( ) NO
	Brake test & record pressure of AUXILIARY HOIST			API RP 2D	(✓) YES ( ) NO
	Change Aux. hoist gear oil and inspect for small particles in the old oil. ** Refer to Onsite Gear Oil Sample Procedure ** ** Replace and send oil sample to SKL if abnormal ** ** Take photo of Oil Sampling for Reference** Please record if any abnormal condition. Note.....			OEM Manual	( ) SEND SKL LAB (✓) NOT SEND SKL LAB
	Check pressre relief Valve: Determine hoistes' relief valve pressure gauge is working and giving accurate measurement by notice whether pressure gauge is vibrating or not. If not, set relief valve pressure in accordance with the schematic and parameters below. Record all readings.			OEM Manual	(✓) YES ( ) NO
	BOOM RELIEF VALVE TEST	Relief Specific:	3,000 PSI	OEM Manual	3000 PSI
	MAIN HOIST RELIEF VALVE TEST	Relief Specific:	3,065 PSI	OEM Manual	3065 PSI
	AUX HOIST RELIEF VALVE TEST	Relief Specific:	2,800 PSI	OEM Manual	2800 PSI
	SWING RELIEF VALVE TEST	Relief Specific:	1,300 PSI	OEM Manual	1300 PSI
	Measure Pressure of hoist motor case drains and Record Value Reference Bulletin: BRADEN Inspection, Testing, Preventive Maintenance and Special Operating Instructions For Planetary Hoists PB-308 latest edition for further details.			OEM Manual	
	MAIN HOIST CASE DRAIN for Gear Motor (Down Mode).	PRESSURE	< 100 psi	Company Spec/Standard	8 PSI
	AUX. HOIST CASE DRAIN for Gear Motor (Down Mode).	PRESSURE	< 100 psi	Company Spec/Standard	4 PSI
Hydraulic System	Check hydraulic tank oil level. Oil should be visible in the sight glass. Top up as required (3/4 Tank Minimum)		5/8	OEM Manual	(✓) YES ( ) NO
	Check hydraulic oil condition. (Check if running hours are more than 100 hours from last oil change or during Annual Inspection) ** Refer to Onsite Hydraulic Oil Sample Procedure ** ** Replace and send oil sample to SKL if abnormal ** ** Take photo of Oil Sampling for Reference**		Rando HD-68	Company Spec/Standard	( ) SEND SKL LAB (✓) NOT SEND SKL LAB
Hydraulic System	Drain off 1 liter of oil to remove condensed water. If water is present, drain until water is removed and top up with clean oil			Industry Standard	(✓) YES ( ) NO
	Check for any hydraulic leaks			Industry Standard	(✓) YES ( ) NO
	Check the hydraulic hose, piping and tubing for mechanical damage, corrosion, splits, blisters, cracking or excessive abrasion on the outer surface			API RP 2D	(✓) YES ( ) NO
	Check that all hydraulic hose connections are sound and that all mounting and pivoting connections are secure.			Industry Standard	(✓) YES ( ) NO
	Lubricate hydraulic swivel in pedestal and insure tie down restrains are in place and preventing the swivel from rotating with the crane structure.			OEM Manual	(✓) YES ( ) NO
	Ensure the filler breather on tank is not covered or clogged			Industry Standard	(✓) YES ( ) NO
	Visually inspect for missing or loose pins, pin keepers, bolts, nuts, fasteners on all pumps, motors and valves			API RP 2D	(✓) YES ( ) NO
	* Re-tighten the stud bolt of hydraulic main pump and marking the nut for checking to prevent loosening. Note : Torqe spec model P76, P75, PGP/PGM350 ,PGP/PGM330 = 200 ft-lbs. , for model PGP/PGM315 = 140 ft-lbs. and PGP/PGM365 = 450 ft-lbs.			The Commercial Intertech manual	(✓) YES ( ) NO
	Check the filter bypass indicator, while engine is running.			OEM Manual	(✓) YES ( ) NO
	With engine running (after all other items pass inspection), check the system for leaks around fittings, hoses, valves and reservoirs			Industry Standard	(✓) YES ( ) NO
	With engine running, check the source of any unusual noise or vibration that may cause or indicate equipment damage or wear			Industry Standard	(✓) YES ( ) NO
	Ensure all hoses are properly rated for the system, see "Parameters" for each system for details.			Industry Standard	(✓) YES ( ) NO
	Record hydraulic oil operating temperture. Note: Hydraulic fluid overheating temperature is over 180 F degrees or 82 C, degrees (reservoir temperature)			Industry Standard	130 Degree F
	Determine if hydraulic return pressure gauge is working and giving accurate measurements. Record readings				
	RECORD HYDRAULIC RETURN PRESSURE PARAMETERS:		60 PSI "maximum"	OEM Manual	22 PSI
	Check and Inspect the hydraulic return filters and seals.			OEM Manual	(✓) YES ( ) NO
	Function Testing and record pressures with engine at :		2,200 RPM	API RP 2D	
	BOOM FUNCTION TEST (Need Crane Mech to verify each platform)			OEM Manual	
	Boom Angle : 60 Degree (Recommend or as applicable)	UP — Cracking pressure	RECORD	OEM Manual	100 PSI
		UP — Full Speed Pressure	RECORD	OEM Manual	900 PSI
		DOWN — Cracking pressure	RECORD	OEM Manual	800 PSI
		DOWN — Full Speed Pressure	RECORD	OEM Manual	1500 PSI
	MAIN HOIST FUNCTION TEST (Need Crane Mech to verify each platform)			OEM Manual	
		UP — Cracking pressure	RECORD	OEM Manual	50 PSI

[redacted] / 15 Apr 25

SYSTEM	TASK				Specification	Record/Reading
	Boom Angle : 60 Degree (Recommend or as applicable)	UP	Full Speed Pressure	RECORD	OEM Manual	400 PSI
		DOWN	Cracking pressure	RECORD	OEM Manual	400 PSI
			Full Speed Pressure	RECORD	OEM Manual	1000 PSI
	AUX HOIST FUNCTION TEST (Need Crane Mech to verify each platform)				OEM Manual	
	Boom Angle : 60 Degree (Recommend or as applicable)	UP	Cracking pressure	RECORD	OEM Manual	50 PSI
			Full Speed Pressure	RECORD	OEM Manual	700 PSI
		DOWN	Cracking pressure	RECORD	OEM Manual	600 PSI
			Full Speed Pressure	RECORD	OEM Manual	1650 PSI
	SWING FUNCTION TEST (Need Crane Mech to verify each platform)				OEM Manual	
	Boom Angle : 60 Degree (Recommend or as applicable)	LEFT	Cracking pressure	RECORD	OEM Manual	200 PSI
			Full Speed Pressure	RECORD	OEM Manual	900 PSI
		RIGHT	Cracking pressure	RECORD	OEM Manual	200 PSI
			Full Speed Pressure	RECORD	OEM Manual	900 PSI
Electrical system, Crane Boom Lighting and red obstruction light	Check the electrical junction boxes, wires and connections for deterioration, desiccant bags, (replace as required)				Industry Standard	(✓) YES ( ) NO
	Check the condition of the grounding and lighting protection system.				Company Spec/Standard	(✓) YES ( ) NO
	Visually inspect boom floodlight and light guards for loose, missing, corroded				Company Spec/Standard	(✓) YES ( ) NO
	Check condition pipe support , U-bolt ,nuts of boom floodlight and Electric slipring for loose , missing , corroded				Company Spec/Standard	(✓) YES ( ) NO
	Check Electric slipring/swivel for 360° continuous rotation				OEM Munnal	(✓) YES ( ) NO
	Check Water ingress, condensation in electric slipring, red obstruction light and boom floodlight				OEM Munnal	(✓) YES ( ) NO
	Check feely movement and lubricate of boom floodlight				OEM Munnal	(✓) YES ( ) NO
	With generator in operation, intergize all lights to unsure proper function.				API RP 2D	(✓) YES ( ) NO
	Check condition of crane boom lighting and safety net is secured with strong point. * **Safety net should be replace 24 months after installation (2 year)***			last installation date _____	Company Spec/Standard	(✓) YES ( ) NO
	Check function of crane sound signal				Company Spec/Standard	( ) YES ( ) NO (✓) N/A
	Check function of crane boom lighting at boom upper section				Company Spec/Standard	(✓) YES ( ) NO ( ) N/A
	Check function of crane boom lighting at boom lower section				Company Spec/Standard	(✓) YES ( ) NO ( ) N/A
	Check function of crane boom lighting at winch skid				Company Spec/Standard	(✓) YES ( ) NO ( ) N/A
	Check function of crane boom lighting at crane cabin				Company Spec/Standard	(✓) YES ( ) NO ( ) N/A
	Check function becon light at boom tip				Company Spec/Standard	(✓) YES ( ) NO ( ) N/A
	Inspection wire rope guide & Roller assembly				Company Spec/Standard	(✓) YES ( ) NO
	Visually inspect red obstruction light pipe support, u-bolts, nuts connection to hand rail for loose, missing, corroded				Company Spec/Standard	(✓) YES ( ) NO
	Visually inspect safety sling attached to the red obsruction light and its base for loose, missing, corroded				Company Spec/Standard	(✓) YES ( ) NO
	Visually inspect red obstruction light function. The light is designed to turn on all the time.				Company Spec/Standard	(✓) YES ( ) NO
Operator Control Station	Check general condition of control panel, bolts, paint security, etc.				API RP 2D	(✓) YES ( ) NO
	Determine if there is a serviceable fire extinguisher in the vicinity of the crane				Company Spec/Standard	(✓) YES ( ) NO
	Determine if correct load chart is in use and easily visible for operator				API RP 2D	(✓) YES ( ) NO
	Determine if charts, indicators and hand signal chart are in the cabling and firmly attached				API RP 2D	(✓) YES ( ) NO
	Determine if angle/radius indicator plate is easily visible to operator and is moving freely.				API RP 2D	(✓) YES ( ) NO
	Check condition of control levers and determine if they "dead-man" back to the neutral position.				API RP 2D	(✓) YES ( ) NO
	Check condition of pressure gauges.				API RP 2D	(✓) YES ( ) NO
	Check proper control labels are firmly installed, completely legible and properly labeled				API RP 2D	(✓) YES ( ) NO
	Check controls for freedom-of-movement				API RP 2D	(✓) YES ( ) NO
	Check condition , Leak, freely moement of Dynamic swing break system *** Note; If HYD Oil loose in CYD reservoir must be refill*				OEM Manual	(✓) YES ( ) NO
	Check condition , Leak, freely moement of Accelerate System *** Note; If HYD Oil loose in CYD reservoir must be refill*				OEM Manual	(✓) YES ( ) NO
	Check all safety glass and rubber seal for proper condition				API RP 2D	(✓) YES ( ) NO ( ) N/A
	Function Test Horn. Note;.....				Industry Standard	(✓) YES ( ) NO ( ) N/A
	Ensure PRE/POST Check List and Pocket Manual in the cabin. Note;.....				Company Standard	(✓) YES ( ) NO ( ) N/A
Load Indicator System	Visual check on fittings and connections for leaks. Fix leak if any. Note:.....				OEM Manual	(✓) YES ( ) NO
	Should any leaks exist, stop leak and recharge system, refer to maintenance manual				OEM Manual	(✓) YES ( ) NO
	Change and flushing Load cell fluid.				OEM Manual	(✓) YES ( ) NO
	Check general condition of tubbing, hoses, pins bolts, paint, etc.				Industry Standard	(✓) YES ( ) NO
	Insure load cell is free of obstructions				OEM Manual	(✓) YES ( ) NO
	Check condition of gauge(s) face and clean glass as required.				OEM Manual	(✓) YES ( ) NO
	Check the scale's operation and weighing accuracy. (Main Hoist) Remark : Maximum variance +/- 2% Note;.....				Company Spec/Standard	(✓) YES ( ) NO ( ) N/A
	Check the scale's operation and weighing accuracy. (Aux. Hoist) Remark : Maximum variance +/- 2% Note;.....				Company Spec/Standard	(✓) YES ( ) NO ( ) N/A
	Check the internal casting fluid of weight indicator. top up if required				Industry Standard	(✓) YES ( ) NO ( ) N/A
	Insure SWL tag matches ratings on the Crane Load Chart.				OEM Manual	(✓) YES ( ) NO ( ) N/A
	Insure Boom Length, matches the Crane Load Chart				OEM Manual	(✓) YES ( ) NO ( ) N/A
	Insure Boom Angle measurements and readings match the boom angle indicator.				OEM Manual	(✓) YES ( ) NO ( ) N/A
	Insure Boom Radius measurements indicate the distance from center line of the crane to the hook				OEM Manual	(✓) YES ( ) NO ( ) N/A
	Check Main load cell gap 1/4 (0.250) inch				OEM Manual	(✓) YES ( ) NO ( ) N/A
	Check Aux load cell gap 3/8(0.380) inch (Compression Load Cell Type)				OEM Manual	(✓) YES ( ) NO ( ) N/A
Pedestal & Structure	Visually check Pedestal for chipped/cracked paint, deformation, worn parts, dents, corroded areas, cracks weld, etc.				API RP 2D	(✓) YES ( ) NO
	Check water rain drain at pedestal must be not obstuct				Industry Standard	(✓) YES ( ) NO
	Check pin and cotter pin of pedestal missing , corrosion, wear, damage and exercise pin.				Industry Standard	(✓) YES ( ) NO
	Visually check Base - Plate connection and Base hoist Structure for chipped/cracked paint, deformation, worn parts, dents, corroded areas, cracks weld, etc.				API RP 2D	(✓) YES ( ) NO

[redacted] / 10 Apr 25

SYSTEM	TASK	Specification	Record/Reading
	Check A fixed such as Handrial, Walkway, Grating, stationary structure without significant movement in response to waves and currents in normal operating conditions.	API RP 2C	(✓) YES ( ) NO
	Visually check and lubricate maintenance Jib. ***Note*** If on pedestal crane	OEM Manual	(✓) YES ( ) NO ( ) N/A
	Check maintenance jib is secure firmly. ***Note*** If on pedestal crane	OEM Manual	(✓) YES ( ) NO ( ) N/A
Box Boom & Luffing CYD	Check and Verify entire box boom and Boom CYD for loss of protective coating and corrosion. Note;.....Good.....	API RP 2D	(✓) YES ( ) NO
	Check and Verify entire box boom and Boom CYD for chipped/cracked paint, deformation, worn parts, dents, corroded areas, cracks, etc. Note;...Good.....	API RP 2D	(✓) YES ( ) NO
	Check and Verify boom end connections, for bends, dents, corroded areas, cracked welds, and signs of mechanical damage, wear, etc. **any deviation should be reported**	API RP 2D	(✓) YES ( ) NO
	Check and Verify boom rest and wooden support to ensure it's in good condition	API RP 2D	(✓) YES ( ) NO
	Inspect pin and pin holes of Upper tank and Lower tank for excessive clearance	OEM Manual	(✓) YES ( ) NO
	BOOM CYLINDER PIN MAXIMUM TOLERANCE — 0.125 inch (3mm)	Industry Standard	As found...On Standard
	Check BOOM CYLINDERS for proper operation and good condition	API RP 2D	(✓) YES ( ) NO
	Check Boom cylinder barrels and rods for leaks, mechanical damage and corrosion	Industry Standard	(✓) YES ( ) NO
	Check and measurement boom foot pin and connection pins for clearance	Industry Standard	
	BOOM FOOT PINS & BOOM BOX CONNECTER PIN TOLERANCE — 0.125 inch (3mm)	Industry Standard	
	Boom Foot Pin Tolerance	Industry Standard	0.077 inch
	Boom Box Connecter Pin Tolerance	Industry Standard	0.073 inch
	Check connecting bolts of box boom loose, corrosion, wear, damage	OEM Manual	(✓) YES ( ) NO
	Lubricate boom foot pins and bushings	OEM Manual	(✓) YES ( ) NO
	Lubricate boom cylinder pins, bearings and bushings	OEM Manual	(✓) YES ( ) NO
	Boom function test angle/radius to correction **Note; The cylinder(s) mechanism shall be capable of elevating the boom from a minimum of zero degrees to the maximum recommended boom angle.	API RP 2C	( ) YES ( ) NO
	Operation functional test and verify Boom Creeping down **Note ; Test at angle 60 °	Industry Standard	( ) YES ( ) NO As found...No Creeping
Wire Rope	Determine if parts-of-line match parts of line on the load chart in the crane cabin.	API RP 2D	(✓) YES ( ) NO
	Determine if visible portion of wire rope adequately lubricated. If not lubricate wire rope	API RP 2D	(✓) YES ( ) NO
	For each layer of wire rope on drum, check that all rope is parallel and each crossover point at hoist flanges is correct	API RP 2D	(✓) YES ( ) NO
	The top layer of rope must not be lower to the flange tips 2.5 in for Smooth drum,2 in for groove drum or 2.5 times of wire rope diameter	API RP 2C	(✓) YES ( ) NO
	Inspect wire rope for, kinking, crushing, broken wires, necking down of rope diameter, worn outside wires, corroded or broken wires at end connection, cutting or unstringing.	API RP 2D	(✓) YES ( ) NO As found...Good.....
	NoteRunning Ropes of rotation-resistant construction used in the main or auxiliary Hoist: - Four (4) Randomly distributed broken wires within 30 rope diameter - Two (2) broken wires in one stand within 6 rope diameter	API RP2D Edition 7	(✓) YES ( ) NO As found...Good.....
	One valley break can indicate internal rope damage requiring close inspection of this section of the rope. When one or more valley breaks are found in one lay length the rope should be retired.	API RP2D Edition 7	(✓) YES ( ) NO As found...Good.....
	Reductions for the rope diameter, from initial wire rope dimensional measurements, in a nonworking area (an area away from the sheaves) compared to the lowest diameter of rope measured in three working areas (areas where the rope regularly goes over a sheave) of more than the following is observed: — 3/64 in. (0.047 in.) (1.2 mm) for diameters up to and including 3/4 in. (19.1 mm); — 1/16 in. (0.062 in.) (1.6 mm) for diameters of 7/8 in. to 1-1/8 in. (22.2 mm to 28.6 mm); — 3/32 in. (0.093 in.) (0.8 mm) for diameter of 1-1/4 in. to 1-1/2 in. (31.8 mm to 38.1 mm); — For rope diameters greater than 1-1/2 in., a 5 % diameter loss from baseline measurement. —Wear of one-third the original diameter of the outside individual wires.	API RP2D Edition 7	(✓) YES ( ) NO As found dimension...Good.....
	Increase in the length of an individual rope lay is observed. This increase in lay length and accompanying reduction in diameter can be caused by failure of the core. This can occur more readily in ropes or rotation-resistant construction,	API RP2D Edition 7	(✓) YES ( ) NO As found...Good.....
	-Inspection and Verify running and standing rope from heat effect **Note; Not more than 250°C -There is evidence of heat damage from any source (i.e, engine exhaust, flare towers, stress corrosion cracking, etc.). Heat can be generated by passing a rope over a frozen or non-turning sheave, contact with structural members of the crane, improperly grounded welding leads or lightning strikes	Industry Standard	(✓) YES ( ) NO As found...Good.....
	With the boom at the highest possible angle and the main load block or overhaul ball at the water level, ensure there is a minimum of 5 wraps of wire-rope remaining on the drums. Note: (Thai law, requires minimum of 2 wraps)	API SPEC 2C / Thai Law	(✓) YES ( ) NO
	Reference: · Running rope safety factor not less than 6 for wire rope that are running wire, (Thai law; Wire rope nominal breaking strength x number parts of line / Design factor 6) · Standing rope safety factor not less than 3.5 for wire rope that are stay cables, (Thai law)	Thai Law	(✓) YES ( ) NO ( ) N/A
	Measure and record nominal diameter of "running ropes"main and auxiliary (particularly on drum, equalizer sheave and at sockets, clips and dead end points) *****Nominal = several measurements added together divided by Number of measurements*****	API RP 2D	(✓) YES ( ) NO
	Inspect wire rope and record dimension.	API RP 2D	
	MAIN WIRE ROPE OD: — FULL DRUM	OEM Manual	0.656 inch
	MAIN WIRE ROPE OD: — HALF DRUM	OEM Manual	0.640 inch
	MAIN WIRE ROPE OD: — WATER LEVEL	OEM Manual	0.641 inch
	AUX WIRE ROPE OD: — FULL DRUM	OEM Manual	0.625 inch
	AUX WIRE ROPE OD: — HALF DRUM	OEM Manual	0.633 inch
	AUX WIRE ROPE OD: — WATER LEVEL	OEM Manual	0.663 inch
	Slip-Cut 1 meter of all ropes at the wedge socket and re-wedge to prevent rust inside of wedge socket (at outward end of rope, not on hoist drum) Dead end tail length is never less than 6 inches, or: - Standard 6 to 8 Strand wire rope is not less than 7 times the rope diameter - Rotation Resistant Wire Rope is not less than 20 times the rope diameter	Company Spec/Standard	(✓) YES ( ) NO
	U-bolt and Fist Grip Clips: Extreme care should be exercised to assure proper orientation of U-bolt clips. The U-bolt segment shall be in contact with the wire rope dead-end. The orientation, spacing, torquing, and number of all clips shall be in accordance with the crane manufacture's specifications.	API SPEC 2C	(✓) YES ( ) NO

[redacted] / 16 Apr 25

SYSTEM	TASK	Specification	Record/Reading
	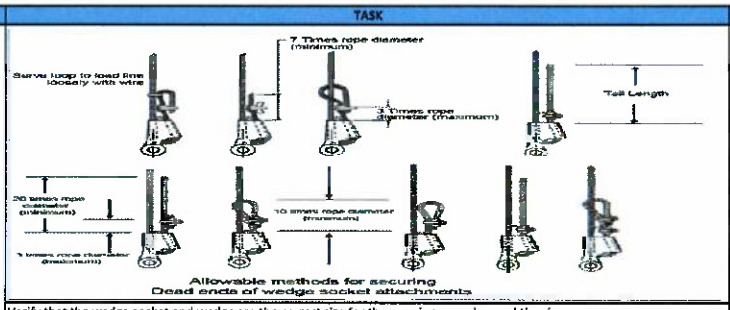 Allowable methods for securing Dead ends of wedge socket attachments	API SPEC 2C	Model and Size wedge socket. Main hoist. Model..... Size.....5/8..... Aux.Hoist. Model..... Size.....5/8.....
	Verify that the wedge socket and wedge are the correct size for the rope in use and record the size	API SPEC 2C	(✓) YES ( ) NO
Sheaves & Bearings	Lubricate all sheave bearings.	API RP 2D	(✓) YES ( ) NO
	Visually inspect all sheaves and bushings for cracks, wear and deterioration	API RP 2D	(✓) YES ( ) NO As found.....Good.....
	Visually inspect wire rope track of sheave for rope imprints, wear and deterioration. If damage exist sheave should be resurfaced or replaced.	API RP 2D	(✓) YES ( ) NO As found.....Good.....
	Pins retained by snap rings, bolt lock shafts, plates lock should be checked for missing or loose for all	API RP 2D	(✓) YES ( ) NO
	Check wirerope guards and keepers for proper location and condition.	API RP 2D	(✓) YES ( ) NO
	Determine if wire rope is jumping the sheaves, by looking for signs of damage on the sheave brim	Industry Standard	(✓) YES ( ) NO
	Sheave Rope Profile for optimum Rope life the sheave groove profile should be correctly matched to the rope diameter	Industry Standard	(✓) YES ( ) NO
	Check rope sheave should be machine grooved to adepth of not less than 1.5 times the norminal diameter of the rope	Industry Standard	(✓) YES ( ) NO
	MAIN POINT SHEAVES: Note;.....Good.....	Industry Standard	No.1 (✓) YES ( ) NO No.2 (✓) YES ( ) NO
	AUX SHEAVES: Note;.....Good.....	Industry Standard	No.1 (✓) YES ( ) NO
	IDLER SHEAVES: Note;.....Good.....	Industry Standard	AUX. (✓) YES ( ) NO Main (✓) YES ( ) NO
	Pins for bronze bushing and straight roller bearing should have a running clearnace of .031 inch/ sheave of end play and should be adjusted accordingly.(count from left)	Industry Standard	(✓) YES ( ) NO
	MAIN POINT SHEAVES:	Industry Standard	Sheave No.1....0.003.... inch Sheave No.2....0.003.... inch
	AUX SHEAVES:	Industry Standard	Sheave No.1....0.004.... inch
	IDLER SHEAVES:	Industry Standard	Sheave AUX....0.003.... inch. Sheave Main....0.003.... inch.
	Ensure the sheaves are aligned and the fleet angle is correct **Remark ; Wire rope User's Manual allows 2 degree on grooved winch drum, Smooth Drum shuold be not more than 1-1/2 degree	API RP 2D	(✓) YES ( ) NO
	Determine if wire rope size and sheave sizes/grooves are compatible and record size. Sheave pitch diameter (D) to nominal wire rope diameter (d) ratio (D/d) shall not be less than 18:1	API SPEC 2C	(✓) YES ( ) NO
	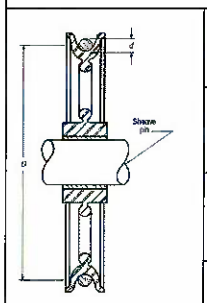 MAIN POINT SHEAVES: SHEAVE D / WIRE ROPE d = >18	API SPEC 2C	18 inch (D) 5/8 inch (d) 23 (Ratio D/d)
	AUX SHEAVES: SHEAVE D / WIRE ROPE d = >18	API SPEC 2C	14 inch (D) 5/8 inch (d) 22 (Ratio D/d)
	IDLER SHEAVES: SHEAVE D / WIRE ROPE d = > 18 (If applicable)	API SPEC 2C	18 inch (D) 5/8 inch (d) 28 (Ratio D/d)
	MAIN BLOCK SHEAVES: SHEAVE D / WIRE ROPE d = > 16	API SPEC 2C	16 inch (D) 5/8 inch (d) 25 (Ratio D/d)
Load Block	Load Block: Check the load block for cleanliness, binding sheaves, damaged or worn sheaves, worn or distorted sheave pins, broken bolts, and worn cheek weights. Note ;.....	Industry Standard	(✓) YES ( ) NO As found...Good.....
	Hook: Check the hook damage, excessive wear to the hook safety latch, hook swivel trunnions, thrust collar, securing, damage or missing lubrication fittings, proper lubrication, cracks and gouges, and if visibly bent or twisted or has been exposed to welding or arching. Note ;.....	Industry Standard	(✓) YES ( ) NO As found...Good.....
	Hook: Tip has been bent more than 10 degree out of plane from the hook body	Industry Standard/API RP2D7	(✓) YES ( ) NO As found...Good.....
	Inspect the Pins for bronze bushing and straight roller bearing should have a running clearnace of .031 inch/ sheave of end play and should be adjusted accordingly	Industry Standard	(✓) YES ( ) NO
	Inspect Hook or shackle to swivel case clearance is set at .031 to .062 inch, Clearance exceeding .12 to .18 (ONLY CROSBY BRAND)	OEM Crosby	(✓) YES ( ) NO
	OEM STANDARD RECOMMEND that Crane block removal from service untill replaced and repair following below	OEM STANDARD	
	- Elongated center pin and hook trunnion holes exceeding 5% of Original diameter	OEM STANDARD	(✓) YES ( ) NO As found.....Good.....

[redacted] / 15 Apr 25.

SYSTEM	TASK	Specification	Record/Reading
	-Material loss due to wear exceeding 10% of original section	OEM STANDARD	(✓) YES ( ) NO As found: Good
	-Sheave wire rop groove diameter smaller then 2.5%	OEM STANDARD	(✓) YES ( ) NO As found: Good
	Loosened tie bolts nuts, center pin round nuts, check weight cap screws and hook nut cap screws. Tie bolt nuts to be torqued to 35-40 ft.Lbs and restaked, all other fasteners wrench tight	OEM STANDARD	(✓) YES ( ) NO
	Throat opening - any distortion causeing an increase in throat opening of 5% not ot exceed 1/4 in. (6 mm.)(or as recommended by the manufacturer)	ASME B30.10	(✓) YES ( ) NO
	Inspect rope track worn in sheave groove, sheave must be resurface or replace	API RP 2D	(✓) YES ( ) NO
	Ensure the load block is not using "Cast Iron" cheek weights they can not be used as per API	API SPEC 2C	(✓) YES ( ) NO As found: YES
	Determine if all hooks are equipped with properly operating safety latches and check for proper functioning	API RP 2D	(✓) YES ( ) NO
	Lubricate sheave bearings and swivels	OEM Manual	(✓) YES ( ) NO
	Re-thighten nut firmly to point at which trunion will just rotate, the Re-tighten set-screw in nut and thread condition as in the picture below,	Industry Standard	(✓) YES ( ) NO
	Last NDE inspection record	Industry Standard	Last inspect date_____
	RECORD LOAD BLOCK INFORMATION : — Manufacturer:	OEM Manual	McKISSICK
	Model:	OEM Manual	M03DT6E4
	Serial Number:	OEM Manual	0362009
	Record Load block measurements and details for future comparison with historical data ⊡	Industry Standard	(✓) YES ( ) NO
	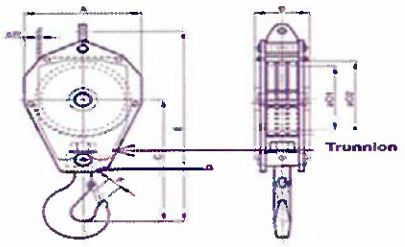 — A - Block OD	Industry Standard	19.5 mm/ inch
	B - Block length	Industry Standard	14 mm/ inch
	C - Center of Pin to hook Saddle	Industry Standard	38.5 mm/ inch
	D1 - Sheave Diameter	Industry Standard	16 mm/ inch
	E - Block Width	Industry Standard	32 mm/ inch
	F - Throat Opening	Industry Standard	7 mm/ inch
	G - Trunnion	Industry Standard	0.046 mm/ inch
Aux. Ball	Inspect Auxiliary ball for cleanliness, binding swivel, work pad-eye hole. Inspect the hook damage, excessive wear to the hook safety latch, Bent connector plates,Severe corrosion pitting, hook swivel trunnions, thrust collar, securing, damage or missing lubrication fittings,Loose, missing or damaged retaining nuts, cotter pins or swivel set screws ,Missing or illegible rating and warning tags, proper lubrication, cracks and gouges, and if visibly bent or twisted or has been exposed to welding or arching.	Industry Standard	(✓) YES ( ) NO
	Hook: Tip has been bent more than 10 degree out of plane from the hook body	Industry Standard/API RP2D7	(✓) YES ( ) NO
	OEM STANDARD recommend that Crane overhaul ball removal from service untill replaced and repair following below	OEM STANDARD	
	- Elongated ball pin holes, hook latch pin holes and swivel eye exceeding 5% of original diameter,	OEM STANDARD	(✓) YES ( ) NO As found: Good
	-Swivel end play gap exceeding .08". Excessive end play indicates damaged internal set screw	OEM STANDARD	(✓) YES ( ) NO As found: Good
	-Material loss due to wear exceeding 10% of original section	OEM STANDARD	(✓) YES ( ) NO As found: Good
	Throat opening - any distortion causeing an increase in throat opening of 5% not ot exceed 1/4 in. (6 mm.)(or as recommended by the manufacturer)	ASME B30.10	(✓) YES ( ) NO
	All hooks that lift personnel are to have a positive locking safety latch **locking Pin to be used while lifting personnel**	API RP 2D	(✓) YES ( ) NO
	*** Temperature Effected : When hooks are to be used at temperature above 400° F. (204°C) or below -40°F (-40°C), the hook manufacturer or a qualified person should be consulted *** Chemically Active Environment : The strength of hooks can be affected by chemically active environments, such as caustic or acid substances or fumes. The hook manufacturer or qualified person should be consulted before hooks are used in chemically active environment	ASME B30.10	
	Verify to ensure nut firmly at which trunion rotate. Identify to set-screw in nut/ swivel/ counter pin and thread condition.	Industry Standard	(✓) YES ( ) NO
	Last NDE inspection record	Industry Standard	Last inspect date_____
	RECORD AUX BALL INFORMATION : — Manufacturer:	OEM Manual	McKISSICK
	Model:	OEM Manual	MB07T200E
	Serial Number:	OEM Manual	0749713
	Record Auxiliary Ball measurements and details for future comparison with historical data: For Model MB07T200E ONLY	Industry Standard	
	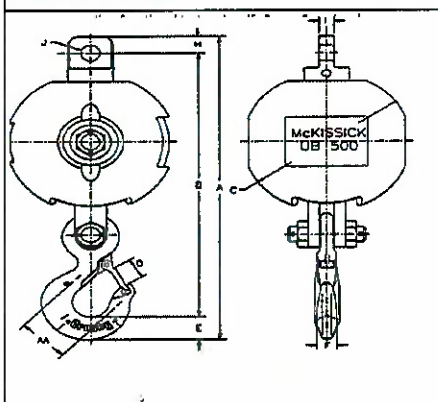 — AA Dimensions 3.0 Inch	Industry Standard	3.10 mm/ inch
	A Dimensions 24.89 Inch	Industry Standard	24.89 mm/ inch
	B Dimensions 21.71 Inch	Industry Standard	21.70 mm/ inch
	C Dimensions 12.50 Inch	Industry Standard	12.50 mm/ inch
	D Dimensions 1.61 Inch	Industry Standard	1.60 mm/ inch
	E Dimensions 1.81 Inch	Industry Standard	1.90 mm/ inch
	F Dimensions 1.38 Inch	Industry Standard	1.38 mm/ inch
	H Dimensions 1.38 Inch	Industry Standard	1.38 mm/ inch
	I Dimensions 0.88 Inch	Industry Standard	0.88 mm/ inch
	J Dimensions 1.31 Inch	Industry Standard	1.30 mm/ inch
Safety system	Check Condition anti - two block , hanging chain ,eye bolts , fix bolts , shackle for missing , corrosion , erosion , deformation	API RP 2D	(✓) YES ( ) NO
	Check anti - two block kick out plate for freely movement	Company Spec/Standard	(✓) YES ( ) NO
	Check anti-2-block device proper function of Main winch	Company Spec/Standard	(✓) Function ( ) False

[redacted] / 15 Apr 25

SYSTEM	TASK		Specification	Record/Reading
	Check anti-2-block device proper function of Aux. winch		Company Spec/Standard	(✓) Function ( ) False
	Check relation of boom radius and boom angle (lowest, middle, highest) with refrence to load chart. Recharge fluid W-15 to load indicator, if required.		API RP 2D	(✓) YES ( ) NO
	Functional test of emergency lowering system (See procedure in Emergency Load Lowering Box). Note: Keep for 1 Yr PM to sustain crane mechanic competency. Caution: Function test must be performed on top deck with max 2-foot height.		Company Spec/Standard	(✓) YES ( ) NO ( ) N/A
	Visually check emergency load lowering kit. Ensure EMERGENCY LOWERING PROCEDURE and MATERIAL LIST are in the box. - Ensure ALL items shown on the list are in the box and in good condition - SECURE THE BOX WITH A TIE WRAP.		Company Spec/Standard	(✓) YES ( ) NO ( ) N/A
Slew Mechanism	Visually check for damage and excessive wear on gear teeth		OEM Manual	(✓) YES ( ) NO
	Visually check slew gear box in the area of oil seal for any leaks		API RP 2D	(✓) YES ( ) NO
	RECORD SLEW GEAR BOX INFORMATION :	Manufacturer:	OEM Manual	ESK
		Model:	OEM Manual	250A01C4-51
		Serial Number:	OEM Manual	
	CHECK and RE-TORQUE swing drive gearbox mounting bolts at following brands: - ESKRIDGE, Model: 250 = 150 FT-LBS		API RP 2D	(✓) Yes ( ) No
	Check swing gearbox oil level/condition, top up if required	Meropa 220	OEM Manual	(✓) YES ( ) NO
	Monitor slew gearbox oil condition by visually examine for burnt smell, metal particles, and/or other contaminants, record and change if found.		OEM Manual	(✓) CHANGE OIL ( ) NOT CHANGE OIL
	Change slew gear box oil		OEM Manual	(✓) CHANGE OIL ( ) NOT CHANGE OIL
	Grease all pivot points of slew ring (bearing)		OEM Manual	(✓) YES ( ) NO
	Grease open gears (pinion)		OEM Manual	(✓) YES ( ) NO
	Rotate crane 360 degree and check smoothness of operation		OEM Manual	(✓) YES ( ) NO
	Check swing drive static parking brake for proper operation Caution: DO NOT stop the swing of the crane with this static brake (parking brake)		OEM Manual	(✓) YES ( ) NO
	Check swing drive dynamic parking brake for proper operation		OEM Manual	(✓) YES ( ) NO
	Check swing lock mechanism condition; corrosion ,dent , loos all part,worn and wear		OEM Manual	(✓) YES ( ) NO As found condition.....Good
	Check swing lock mechanism freely lock and unlock for function. **Check and inspect for hydraulic for leaks on actuator model.**		OEM Manual	(✓) YES ( ) NO As found condition.....Good
	Check condition of slew ring bolts e.g. Bolt grade and washers. Caution: Use only hardened flat washers under head of bolt. Do not use lock washers, or regular flat washers.		Industry Standard	(✓) YES ( ) NO As found condition.....Good
	Monitor ball-ring grease sample. If found wear and tear particles, take sample and send to lab. **Wear assessment by grease sample analysis—wear may be monitored by periodic grease sample analysis as describe in this section. Grease samples should be collected every twelve months as a minimum and the results of the analysis recorded; this period should be shortened if obvious metal or contaminants are present.		API PR 2D	( ) SEND TO LAB (✓) NOT SEND TO LAB As found.....Not Contaminants
	Verify crane condition and load test as separate procedure. **Table 1—Static/Onboard Test Load and Radius** Static/Onboard Rated Load at a Specific Radius lb (kg) — Test Loads in Excess of Static/Onboard Rated Load at a Specific Radius ≤ 40,000 (18,144) — 25 % > 40,000 ≤ 100,000 (>18,144 ≤ 45,356) — 10,000 lb (4536 kg) > 100,000 (45,356) — 10 %		API 2C	(✓) YES ( ) NO Specific test load.....lbs.
	Verify crane condition and load test as separate procedure. " Record crane load test in load test form."		Company Standard	(✓) YES ( ) NO

Risk Level Definitions: The following 3 levels indicate the impact the noted deficiency poses to the operation or structural integrity of the equipment:

Level 1 = Incidental	Level #2 = Restricted Operation	Level #3 =Out of Service
Minor deficiency that is recommended to be promptly addressed, but poses no safety and/or environmental risk. The crane can still be operated at full duty.	Deficiency identified that has the potential to limit, de-rate or damage the crane, its surroundings and/or the environment. The duty and locked/ tagged out until the crane's duty and operation should be de-rated or service restricted.	The crane should be removed from duty and locked/ tagged out until the deficiency is rectified.

System: radiator	Risk Level: 2	Component:		In Accordance with:	Company
		Location:	engine	Date Originated:	9/29/26
Description:	corroded radiator fins				
Recommended Action:	Monitor.				
Recommended urgency timeframe for corrective action:		Completed Date:		Completed By:	

System:	Risk Level:	Component:		In Accordance with:	
		Location:		Date Originated:	
Description:					
Recommended Action:					
Recommended urgency timeframe for corrective action:		Completed Date:		Completed By:	

System:	Risk Level:	Component:		In Accordance with:	
		Location:		Date Originated:	
Description:					
Recommended Action:					

[redacted] / 15 Apr 28

SYSTEM	TASK			Specification		Record/Reading
Recommended urgency timeframe for corrective action:		Completed Date:			Completed By:	

System:	Risk Level:	Component:		In Accordance with:	
		Location:		Date Originated:	
Description:					
Recommended Action:					
Recommended urgency timeframe for corrective action:			Completed Date:		Completed By:

System:	Risk Level:	Component:		In Accordance with:	
		Location:		Date Originated:	
Description:					
Recommended Action:					
Recommended urgency timeframe for corrective action:			Completed Date:		Completed By:

System:	Risk Level:	Component:		In Accordance with:	
		Location:		Date Originated:	
Description:					
Recommended Action:					
Recommended urgency timeframe for corrective action:			Completed Date:		Completed By:

Done By 12-4-25

[redacted]

THE PEDESTAL CRANE CONDITION VERIFICATION

Date :			
Crane Owner : CTEP/ COTL Field: Benchamas Platform/ Vessel: BEWT			
Crane Owner 's representative : (Mech Supv./ M'Dent) [redacted]			
Qualified inspector : (Qualified Crane Mechanic)			
Inspector 's company / agency : (Third Party or Outsource to witness if applicable)			
Manufacture Nautilus Fabrication by Oil States Year of Fabrication Aug 2007 Country USA Model / Serial 18081-80(MS) / 23900 C Standard API Edition SIXTH 2004			Remark
Safe Working Load (SWL) —> OEM	14.52 Metric Tonnes		
Safe Working Load (SWL) —> Existing via MOC, if applicable	– Metric Tonnes		
Boom length, Main	80 Ft		
Boom length, Auxiliary if applicable	– Ft		
Part of line main hoist	4 Part line		
Part of line auxiliary hoist	1 Part line		
Safe Working Load at longest boom radius	80 ft	3.30 Metric Tonnes/ ~~Lbs~~	
Safe Working Load at shortest boom radius	13 ft	14.52 Metric Tonnes/ ~~Lbs~~	
The document of crane specification for Testing , Maintenance and Inspection are provided by:	OEM	MOC / Crane Engineer	
Has the crane ever been modified by MOC ? (To verify if this crane is modified with MOC –> Allow to test the crane. If this crane is modifed without MOC –> Not allow to test the crane)	YES	NO	(Employers are not allowed to modify or adjust any part of cranes or dericks or consent to other persons to do these things, that might reduce the safety of the employees who work with the cranes or derricks).
Does the rotating part have proper guard in place?	YES	NO	(Need mitigation plan)
Is the ladder and hand rail in place?	YES	NO	(Need mitigation plan)
Is the maintenance platform in place?	YES	NO	(Need mitigation plan)
Is the SWL tag labelled on crane pedestal, main block or aux ball?	YES	NO	(Need mitigation plan)
Verify if the crane major component damaged or not	YES (Need to repair or mitigate unsafe condition with MOC before testing)	NO	(Employers shall not allow employees work with damaged/ unsafe cranes or derricks)
Inspect boom end connections, for bends, dents, corroded areas, cracked welds, and signs of mechanical damage, wear, etc. **any deviation should be reported** Level 1 = Incidental : Minor deficiency that is recommended to be promptly addressed, but poses no safety and/or environmental risk. The crane can still be operated at full duty. –> Allow to test Level #2 = Restricted Operation: Deficiency identified that has the potential to limit, de-rate or damage the crane, its surroundings and/or the environment. The duty and locked/ tagged out until the crane's duty and operation should be de-rated or service restricted. –> To be derated Level #3 = Out of Service;The crane should be removed from duty and locked/ tagged out until the deficiency is rectified. –> Not Use	YES (To be verified)	NO	
Function Load Testing			
1. Verify Crane SWL (Existing)	3.0 Metric Tonnes		
2. Verify routine maximum actual load.	2.4 Metric Tonnes		
3. Select the specimen load to be more than actual routine load 1.25 times but not more than SWL. Example # 1 : Crane 's SWL is 18 Metric Tonnes. The routine maximum actual load is 2.4 Metric Tonnes. Therefore, the load testing shall be 2.4 x 1.25 = 3 Metric Tonnes. Example # 2 : Crane 's SWL is 18 Metric Tonnes. The routine maximum actual load is 16 Metric Tonnes. By calculation, the load testing is 16 x 1.25 = 20 Metric Tonnes more than SWL (18 MTon). **Therefore, the load testing shall be 18 Metric Tonnes equal to SWL.**	3.0 Metric Tonnes		
4. Use Auxiliary Winch if specimen load less than or equal 3 Metric Tonne	YES	NO	
5.Use Main Winch if specimen load more than 3 Metric Tonne	YES	NO	
6. The record of load testing : Fill in "Function Test Record" sheet attached.			

RECORDED FUNCTION TEST PROCEDURE

1. CHECK AND RECORD READING RADIUS AND BOOM INDICATIOR AT FOUR (4) VALUES INCLUDING MAXIMUM AND MINIMUM.

(ALL REDIUS MEASUREMENT ARE TO BE TEKEN FROM THE CENTERLINE OF CRANE ROTATION)

ACTUAL	INDICATED RADIUS (FT)
A) 15' (MINIMUM)	15
B) 20'	20
C) 25'	25
D) 30' (INTERMIDIATE)	30
E) 40'	40
F) 50' (INTERMIDIATE)	50
G) 60'	60
H) 75' (MAXIMUM)	75

2. CHECK AND RECORD READING ON BOOM ANGLE / DEGREES.

SPECIFICATION	INDICATED BOOM ANGLE (DEGREES)
1). MAXIMUM. .....81..... DEGREES	81
2). INTERMEDIATE. .....60..... DEGREES	60
3). INTERMEDIATE. .....40..... DEGREES	40
4). MINIMUM. .....0..... DEGREES	0

3. READING ON LOAD INDICATOR WITHOUT SLINGS OR LOAD / LBS. (LOAD BLOCK + WIRE ROPE)

ACTUAL	INDICATOR READ FREE LOAD, (LBS)
1). MAXIMUM RADIUS 990 LBS.	990
2). MINIMUM RADIUS 1200 LBS,	1200

4. CHECK AND RECORD ENGINE HIGH IDLE SPEED / RPM.

SPECIFICATION	INDICATED OF FUNCTIONAL (RPM)
1). IDLE SPEED 850 RPM	850
2). LOW SPEED – RPM	–
3). HIGH SPEED 2200 RPM	2200

5. FUNTIONALLY TEST THE FOLLOWING.

ACTUAL	INDICATED OF FUNCTIONAL (TESTED)
A) MAIN HOIST ANTI -TWO BLOCK.	function
B) AUXILIALY HOIST ANTI -TWO BLOCK.	function
C) HIGH BOOM ANGLE KICK OUT.	N/A
D) LOW BOOM ANGLE KICK OUT.	N/A
E) PRIME MOVER SHUTDOWN.	function
F) EMERGENCY SHUTDOWN.	function
G) ROTATE CRANE 360 LEFT.	Smoot
H) ROTATE CRANE 360 RIGHT.	Smoot

6. RECORD HYDRAULIC RELIEF VALVE PRESSURE SETTING ON FOLLOWING HYDRAULIC FUNCTION:

SPECIFICATION	INDICATED PRESSURE (PSI)
A) MAIN HOIST ...3065..... PSI.	3065
B) AUXILIALY HOIST ...2800..... PSI.	2800
C) BOOM HOIST ...3000..... PSI.	3000

TEST CONDUCTED BY: [redacted] POSITION :

CRANE OPERATOR : [redacted] POSITION : CR - Mech

COMMENTS : DATE :

.....

.....

.....

.....

W/O: 12494431

Sheet: 18081-80 (MS)CH4

CRANE MAKE : Nautilus
MODEL: 180B1-80 (MS)
SERIAL NUMBER : Crane Specific

LOCATION: C2, Remote Platform

DATA BASE - PM JOB TASK CARD: MAWC

Crew Size:
Estimated Hours:

SYSTEM	TASK		Specification	Record/Reading
Safety	Perform Job Safety Analysis (JSA)		Company Spec/Standard	(✓) YES ( ) NO
	Obtain "COMPANY' PERMIT TO WORK		Company Spec/Standard	(✓) YES ( ) NO
	Perform Tool Box Talk		Company Spec/Standard	(✓) YES ( ) NO
	BEFORE/AFTER JOB EXECUTION: Ensure to comply with isolation procedure (LOCK OUT/TAG OUT, WARNING SIGNS and BARRIERS).		Company Spec/Standard	(✓) YES ( ) NO
Required Tools	Insure proper tools are available at the job site		Company Spec/Standard	(✓) YES ( ) NO
	Tool bag		Company Spec/Standard	(✓) YES ( ) NO
	Tool box		Company Spec/Standard	(✓) YES ( ) NO
	Tool Container		Company Spec/Standard	(✓) YES ( ) NO
	MPI equipment and operator		Company Spec/Standard	(✓) YES ( ) NO
	Check safety harness Software and Hardware should be good condition before use		Company Spec/Standard	(✓) YES ( ) NO
	Check Rescue Equipment ready to use onsite		Company Spec/Standard	(✓) YES ( ) NO
	Portable Scaffolding and Crew if require		Company Spec/Standard	(✓) YES ( ) NO
Lubricants	Insure proper lubricants and consumables are available at the job site.		Company Spec/Standard	(✓) YES ( ) NO
	Hydraulic System - Hydraulic Oil	Rando HD-68	OEM Manual	(✓) YES ( ) NO
	Slew Gearbox - Gear Oil	Meropa 220	OEM Manual	(✓) YES ( ) NO
	Auxiliary Hoist - Gear Oil	Meropa 220	OEM Manual	(✓) YES ( ) NO
	Main Hoist - Gear Oil	Meropa 220	OEM Manual	(✓) YES ( ) NO
	Grease Points - Lithium Based **IT MUST NOT INCLUDE MOLYBDENUM DISULPHIDE**	MULTIFAK EP#2	OEM Manual	(✓) YES ( ) NO
	Open Gear Teeth - Open Gear Lube highly water resistant and of an adhesive nature.	OMEGA 73	OEM Manual	(✓) YES ( ) NO
	Pneumatic Lubricator	SAE Grade 10	OEM Manual	(✓) YES ( ) NO
	Wire rope Lubricant Company preferred grade	Birlube 70	OEM Manual	(✓) YES ( ) NO
	Engine Oil - SAE Grade 15W-40 (Delo Gold)	15W-40	OEM Manual	(✓) YES ( ) NO
	Safe Load Indicator fluid	W-15	OEM Manual	(✓) YES ( ) NO
	Engine Radiator - Should have radiator preservatives additives	Cat® SCA	OEM Manual	(✓) YES ( ) NO
Consumables	Spray Cold Galvanize		Company Spec/Standard	(✓) YES ( ) NO
	Denso Tape		Company Spec/Standard	(✓) YES ( ) NO
	WD-40		Company Spec/Standard	(✓) YES ( ) NO
History Review	Before starting work, tasks preparation at least 1 day prior to starting work: 1. Review history PM/ CM from Roving Team, 2. Review last PM/ CM/ PMI from Crane Mech, 3. List out all punch list and prepare parts. 4. Review last Certificate task performed		API RP 2D	(✓) YES ( ) NO
	Require to update part history from Crane Mech on following main compenents to ensure the right parts are prepared: - Aux/ Main/ Boom Cylinder, Engine, Swing Gearbox, etc. **Reference:** Crane OEM information of each part need to be recorded - Manufacturer & Contact info - Model & serial number - Installation date		Company Spec/Standard	(✓) YES ( ) NO
	Review history data from Certificates and incorporate into current PM: - Pull Test Certificates (ongoing update, 4 yr. history). - Load Test Certificates (ongoing update, 4 yr. history). - Wire Rope Certifications (running rope and standing rope) (life of rope). - Hoist Certifications for hoist classified as "personnel handling" hoist.		API RP 2D	(✓) YES ( ) NO
	Review Last Preventative Maintenance Records (Inspection Reports) - Pre-use (Pre-Post Inspection) - 6 Monthly (API RP 2D Not Defined, Company Standard) - 1 Yearly (API RP 2D Defined Annual Inspection)		API RP 2D	(✓) YES ( ) NO
Lifting Gear Preparation	Visually Inspect (Sling, sling hooks and shackles) include Websling / Chain		Company Spec/Standard	(✓) YES ( ) NO
	Check color code / Tag & date inspection		Company Spec/Standard	(✓) YES ( ) NO
General	Determine if access route to-from crane is clean, safe, unobstructed and adequately protected against falls, tripping and slipping		Company Spec/Standard	(✓) YES ( ) NO
	Check drain lines and drip pans for deterioration		API RP 2D	(✓) YES ( ) NO
	Remove any sediment collected in the bottom of drip pans		Industry Standard	(✓) YES ( ) NO
	Check for general crane and components for loss of protective coating and corrosion		Industry Standard	(✓) YES ( ) NO
	Check for missing or loose ,corrosion, deformation pins, pin keepers, bolts, nuts, fasteners of all laders, cages and working platform		API RP 2D	(✓) YES ( ) NO
	Apply grease to exposed grease parts (control valve spools, ball-ring gear, parking brake valve, etc.)		OEM Manual	(✓) YES ( ) NO
Prime Mover	Engine Caterpillar		OEM Manual	(✓) YES ( ) NO
	CATERPILLAR MODEL 3216	S/N.:	OEM Manual	92R03501
		ARR.No.:	OEM Manual	132-1383
	Check lube oil level and condition, top up / replace if required		OEM Manual	(✓) YES ( ) NO
	Check diesel tank level, top up if required.		OEM Manual	(✓) YES ( ) NO
	Check/Clean crankcase breather		OEM Manual	(✓) YES ( ) NO
	Check/Clean air cleaner		OEM Manual	(✓) YES ( ) NO
	Check Condition of radiator / clean radiator cap		OEM Manual	(✓) YES ( ) NO
	Check for any signs of leaks on or around the engine ie; Crankshaft seal (front /rear)		OEM Manual	(✓) YES ( ) NO
	Check for engine exhaust system for leaks, corrosion, insulation and general condition		OEM Manual	(✓) YES ( ) NO
	Check all engine hoses for wear and deterioration		OEM Manual	(✓) YES ( ) NO
	Drain water and sediment form diesel tank		OEM Manual	(✓) YES ( ) NO
	Clean Diesel tank level sightglass		OEM Manual	(✓) YES ( ) NO
	Lubricate fan bearing/shaft		OEM Manual	(✓) YES ( ) NO
	Change Radiator Coolant		OEM Manual	(✓) YES ( ) NO
	Test radiator Coolant PH, Top up if required and Record Value		OEM Manual	(✓) YES ( ) NO
	COOLANT PARAMETERS (PH):	6 or higher	OEM Manual	PH = 9
	HOUR METER PARAMETERS:	LAST READING 1091 HRS	OEM Manual	1111 HRS
	Check condition of engine hold down bolts		OEM Manual	(✓) YES ( ) NO
	Check condition fan blade		OEM Manual	(✓) YES ( ) NO
	Change cooling fan drive belts		OEM Manual	(✓) YES ( ) NO
	Inspect CAT 3126 engine belts for wear and looseness. If necessary, replace or adjust. To check belt Tension, after has engine run more than 30 minutes apply 400 N (90 lbs) of force midway between the pulleys. Correctly adjusted belts with deflect 13 to 19 mm (1/2 to 3/4 inch).		OEM Manual	(✓) YES ( ) NO

SYSTEM	TASK			Specification	Record/Reading
	Check engine HYD starter drive gear bendix and fly wheel gear teeth condition and record. **Replace if required"			OEM Manual	(✓) YES ( ) NO Bendix Gear : 90 % Fly wheel Gear teeth : 90 %
	Check condition Rachet Bendix HYD Starter			OEM Manual	(✓) YES ( ) NO
	Lubricate and check engine throttle system.			OEM Manual	(✓) YES ( ) NO
	Determine if the tachometer operates properly: Record Value of Idle & Max Speed (RPMs) Note: Too low Idle (RPMS) will cause excessive worn at winch brake			OEM Manual	
	ENGINE RPM SPECIFIC	IDLE SPEED	850-950 RPM	OEM Manual	950 RPM
		MAX SPEED	2200 RPM	OEM Manual	2200 RPM
	Confirm engine oil pressure as per Parameters below and Record Value:			OEM Manual	
	ENGINE OIL PRESSURE SPECIFIC	Minimum	30 PSI	OEM Manual	40 PSI
		Maximum	70 PSI	OEM Manual	60 PSI
	Confirm engine fuel pressure Parameters are correct and Record Value:			OEM Manual	
	ENGINE FUEL PRESSURE SPECIFIC** **Note;Fuel pressure at high idle is lower than 105 kPa (15 psi)RAMETERS*	Normal	Green Range/ 15 PSI	OEM Manual	(✓) YES ( ) NO
	Confirm engine temperature Parameters and Record Value:			OEM Manual	
	ENGINE WATER TEMP SPECIFIC	NORMAL	120 - 180 degrees F	OEM Manual	160 F
	Test engine SAFETY DEVICE- ensure engine kill cable shuts off FUEL supply			API RP 2D	(✓) Function ( ) False
	Test engine SAFETY DEVICE- ensure EMERGENCY KILL CABLE - shuts off AIR supply			API RP 2D	(✓) Function ( ) False
	Test engine SAFETY DEVICE- ensure ENGINE low lube oil - releases OIL PRESSURE to ctivate Alarm Air System ****Note*** Engine oil pressure low alarm at 20 PSI*			Company Spec/Standard	(✓) Function ( ) False
	Test engine SAFETY DEVICE- ensure HIGH TEMP - releases OIL PRESSURE to activate Alarm Air System			Company Spec/Standard	(✓) Function ( ) False
	Check / Clean primary fuel/water separator *Replace if required*			OEM Manual	(✓) YES ( ) NO
	Check condition of turbocharger, and for any oil or hot air leaks			OEM Manual	( ) Leak (✓) Not Leak
	Change engine lube oil and oil filter			OEM Manual	(✓) YES ( ) NO
	Change fuel filter			OEM Manual	(✓) YES ( ) NO
	Change air filter, if required			OEM Manual	(✓) YES ( ) NO
	Check fuel injection pump,governor for any leak and noise			OEM Manual	(✓) YES ( ) NO
	Check/Adjust engine lash valve, inspect valve rotators valve clearance (IN = 0.015", EXT = 0.025")			OEM Manual	(✓) YES ( ) NO
	Check Fuel Timing of Unit Injector (CAT 3126) Reference: Fuel timing injection length, use the following references to obtain information: - Engine Information Plate (located at valve cover) - TMI (Technical Marketing Information - located at Manual Book) - Fuel setting and related information Fiche			Company Spec/Standard	6.98 mm/~~inch~~ (After Adjustment)
	Check Damper of Crank Shaft Pulley (CAT Engine 3126)			OEM Manual	(✓) YES ( ) NO
	Change gasket valve cover			Company Spec/Standard	(✓) YES ( ) NO
	Test/Exchange fuel injection nozzle, if required. Require inspection record for tracking.			Company Spec/Standard	(✓) Function ( ) False
	Rebuild or replace Starter motor, if required. Require inspection record for tracking.			Company Spec/Standard	(✓) YES ( ) NO
	Rebuild or d replace Water pump, if required. Require inspection record for tracking.			Company Spec/Standard	(✓) YES ( ) NO
	Rebuild or replace Turbo charger, if required. Require inspection record for tracking.			Company Spec/Standard	(✓) YES ( ) NO
	Check and Inspect condition wear of pump drive spline and record ***Note; Remaining 70% of Original Spline Surface must be replace.*			Company Spec/Standard	90 % Remaining
	Check and Inspect condition wear of adaptor Coulping spline shaft and record ***Note; Remaining 70% of Original adaptor Coulping spline shaft Surface must be replace.* loss 80%			Company Spec/Standard	20 % Remaining
	Check and Inspect condition wear and crack of Coulping Drive Plate			Company Spec/Standard	90 % Remaining
	Retorque bolts of Coupling Drive Plate			OEM Spec/Standard	(✓) YES ( ) NO
	Evaluate engine performance, tune up if required			Company Spec/Standard	(✓) YES ( ) NO
Hydraulic Start System (Apply for CZ-Remote P/F Only)	**Check pressure system** at the pressure gauge which should reach 3,000 PSI as standard when the system is FULLY charged. Record Value. (As the system cools down, the pressure should drop slightly and finally stabilised.)			OEM Manual	(✓) YES ( ) NO
	Visually inspect all hydraulic connections and hoses for leaks and retighten if necessary. (Caution: This should NOT be done if the system is under pressure.) 1. Slowly release system pressure by loosening the bleed screw on top of the hand pump. 2. Ensure no pressure remains, retighten the suspected leak fitting or replace the damaged hose or component. 3. Retighten the bleed screw on the hand pump. 4. Pump the system up to 2200 - 2600 PSI 5. Inspect that the leak was eliminated.			OEM Manual	(✓) YES ( ) NO
	Function check Accumulator Pre-charge. (Caution: This should NOT be done if the system is under pressure.) 1. Shut the engine off, release system pressure via the bleed screw on top of the hand pump 2. Retighten bleed screw and actuate the hand pump. The pressure will rapidly increase and then stabilised. This pressure is related to accumulator gas pre-charge pressure. 4. If the pressure rapidly increase to 3000 PSI, it indicates that the accumulator has lost its gas charge. 5. Troubleshoot as necessary			OEM Manual	(✓) YES ( ) NO
	Check function rechaging system by function boom down while the engine running. 1. The crane engine is running at 1,000-1500 RPM. 2. Slowly control lever boom function down for charging pressure to accumulator. 3. This pressure should read on prssure gauge between 2200 - 2600 PSI depending on the recharge ratio 80% std. (90% optional). Record Pressure Value.			OEM Manual	2200 PSI
	Check Nitrogen pressure in Accumulator ***Note**spec @ 1,500 psi as follow schematic and if found pressure loss below 1400 PSI then prepare recharge nitrogen in system			OEM Manual	1,500 PSI
Pneumatic System	check for noisy compressor operation, which could indicate a worn drive gear coupling, a loose pulley or excessive internal wear			Company Spec/Standard	(✓) YES ( ) NO
	Check Air Compressor external oil supply and return lines, if applicable, for kinks, bends, or restrictionsto flow			Company Spec/Standard	(✓) YES ( ) NO

SYSTEM	TASK			Specification	Record/Reading
	Inspect the Air compressor discharge port, inlet cavity and discharge line for evidence of restrictions and carboning. (If excessive buildup is noted)			Company Spec/Standard	(✓) YES ( ) NO
	Check all hose connections are sound and all mounting and pivoting connections are secure.			Industry Standard	(✓) YES ( ) NO
	Check condition / Clean and lubricate unloading valve			Industry Standard	(✓) YES ( ) NO
	Check proper air pressure is available for the system. Record Value.			OEM Manual	
	AIR SYSTEM PARAMETERS:	MAX 60 PSI		OEM Manual	60 PSI
	Visually inspection condition of air receiver for signs of corrosion or loose of structural integrity.			Industry Standard	(✓) YES ( ) NO
	Check the hose, piping and tubing for mechanical damage, corrosion, splits, blisters, cracking or excessive abrasion on the outer surface			Industry Standard	(✓) YES ( ) NO
	Drain off air filter and reciever to remove condensed water. If water is present, drain until water is removed.			Industry Standard	(✓) YES ( ) NO
	Check proper operation of pop off valve, by manually functioning valve.			Industry Standard	(✓) YES ( ) NO
	Check proper operation of manual latch valve, by manually functioning latch.			Industry Standard	(✓) YES ( ) NO
	Check proper operation of small engine alarm horn.			Industry Standard	(✓) YES ( ) NO
Hoist / Brakes	Visually check a hoist exhibits erratic operation and/or unusual noise, the hoist must be taken out of service until it is inspected and serviced by a qualified technician. Continued operation of a hoist with a defect in a critical component may lead to loss of load control, property damage, serious injury or death.			OEM Manual	(✓) YES ( ) NO
	Visual exteriors of hoist, frames, drums and flanges for damage, leaks, cracks and wear and repair/replace as required to maintain the structural integrity of the hoist.			OEM Manual	(✓) YES ( ) NO
	Check all hoist mounting pins, bolts or other fasteners and replace or tighten as necessary.			OEM Manual	(✓) YES ( ) NO
	Lubricant level must be maintained between the minimum and maximum levels; midway up sight glass or at bottom of level plug port as equipped and check/clean plug vent. Use only the recommended type of lubricant.			OEM Manual	(✓) YES ( ) NO
	Inspect Brake Valve Opening Pressure test V/V 1-1/4" PD Series : no lower than 550 PSI	Aux		Braden Bulletin 527-Dec,1996	550 PSI
	Inspect Brake cylinder opening pressure test. CH/PD Series : 400-450 PSI	Aux		Industry Standard	450 PSI
	Measure differancian of static and dynamic brake. CH/PD Series : 150-250 PSI	Aux		Industry Standard	150 PSI
	Check for external oil leaks and repair as necessary. This is extremely important due to the accelerated wear that will result from insufficient lubricating oil in the hoist.			OEM Manual	(✓) YES ( ) NO
	RECORD BOOM CYLINDER INFORMATION :	Boom cylinder Diameter:		OEM Manual	DIA: 12" Inch
		CY Number:		OEM Manual	L= 6011-2 R= 6011-4
		Serial Number:		OEM Manual	L= 3411 R= 2333
	RECORD MAIN HOIST INFORMATION :	Manufacturer:		OEM Manual	Braden
		Model:		OEM Manual	CH 1253-23 Braden 02
		Serial Number:		OEM Manual	1200890
	Check MAIN HOIST for proper operation and good condition			API RP 2D	(✓) YES ( ) NO
	Brake test & record pressure of MAIN HOIST			OEM Manual	(✓) YES ( ) NO
	Check MAIN HOIST gear oil level/condition, top up if required. ** Refer to Onsite Gear Oil Sample Procedure ** ** Replace and send oil sample to SKL if abnormal ** ** Take photo of Oil Sampling for Reference**			OEM Manual	(✓) YES ( ) NO
	Change main hoist gear oil			OEM Manual	(✓) YES ( ) NO
	RECORD AUXILIARY HOIST INFORMATION :	Manufacturer:		OEM Manual	Braden
		Model:		OEM Manual	PD 12C-79004-02
		Serial Number:		OEM Manual	1930320
	Check AUXILIARY HOIST for proper operation and good condition			API RP 2D	(✓) YES ( ) NO
	Brake test & record pressure of AUXILIARY HOIST			API RP 2D	(✓) YES ( ) NO
	Check AUXILIARY HOIST gear oil level/condition, top up if required. ** Refer to Onsite Gear Oil Sample Procedure ** ** Replace and send oil sample to SKL if abnormal ** ** Take photo of Oil Sampling for Reference**			OEM Manual	( ) SEND SKL LAB (✓) NOT SEND SKL LAB
	Change auxiliary hoist gear oil			OEM Manual	(✓) YES ( ) NO
	Check Relief Valve: Determine hoistes' relief valve pressure gauge is working and giving accurate measurement by notice whether pressure gauge is vibrating or not. If not, set relief valve pressure in accordance with the schematic and parameters below. Record all readings.			OEM Manual	(✓) YES ( ) NO
	BOOM RELIEF VALVE TEST	Relief Specific:	3,000 PSI	OEM Manual	3000 PSI
	MAIN HOIST RELIEF VALVE TEST	Relief Specific:	3,065 PSI	OEM Manual	3085 PSI
	AUX HOIST RELIEF VALVE TEST	Relief Specific:	2,800 PSI	OEM Manual	2800 PSI
	SWING RELIEF VALVE TEST	Relief Specific:	1,300 PSI	OEM Manual	1300 PSI
	Measure Pressure of hoist motor case drains and Record Value **Reference Bulletin:** BRADEN Inspection, Testing, Preventive Maintenance and Special Operating Instructions For Planetary Hoists PB-308 latest edition for further details.			OEM Manual	
	MAIN HOIST CASE DRAIN for Gear Motor (Down Mode).	PRESSURE	< 100 psi	Company Spec/Standard	16 PSI
	AUX. HOIST CASE DRAIN for Gear Motor (Down Mode).	PRESSURE	< 100 psi	Company Spec/Standard	15 PSI
Hydraulic System	Check hydraulic tank oil level. Oil should be visible in the sight glass. Top up as required (3/4 Tank Minimum)			OEM Manual	(✓) YES ( ) NO
	Check hydraulic oil condition. (Check if running hours are more than 100 hours from last oil change or during Annual inspection) ** Refer to Onsite Hydraulic Oil Sample Procedure ** ** Replace and send oil sample to SKL if abnormal ** ** Take photo of Oil Sampling for Reference**		Rando HD-68	Company Spec/Standard	( ) SEND SKL LAB (✓) NOT SEND SKL LAB
Hydraulic System	Drain off 1 liter of oil to remove condensed water. If water is present, drain until water is removed and top up with clean oil			Industry Standard	(✓) YES ( ) NO
	Check for any hydraulic leaks			Industry Standard	(✓) YES ( ) NO
	Check the hydraulic hose, piping and tubing for mechanical damage, corrosion, splits, blisters, cracking or excessive abrasion on the outer surface			API RP 2D	(✓) YES ( ) NO
	Check that all hydraulic hose connections are sound and that all mounting and pivoting connections are secure.			Industry Standard	(✓) YES ( ) NO

SYSTEM	TASK				Specification	Record/Reading
	Lubricate hydraulic swivel in pedestal and insure tie down restrains are in place and preventing the swivel from rotating with the crane structure.				OEM Manual	(✓) YES ( ) NO
	Ensure the filler breather on tank is not covered or clogged				Industry Standard	(✓) YES ( ) NO
	Visually inspect for missing or loose pins, pin keepers, bolts, nuts, fasteners on all pumps, motors and valves				API RP 2D	(✓) YES ( ) NO
	Check the filter bypass indicator, while engine is running				OEM Manual	(✓) YES ( ) NO
	With engine running (after all other items pass inspection), check the system for leaks around fittings, hoses, valves and reservoirs				Industry Standard	(✓) YES ( ) NO
	With engine running, check the source of any unusual noise or vibration that may cause or indicate equipment damage or wear				Industry Standard	(✓) YES ( ) NO
	Ensure all hoses are properly rated for the system, see "Parameters" for each system for details.				Industry Standard	(✓) YES ( ) NO
	Record hydraulic oil operating temperture. Note: Hydraulic fluid overheating temperature is over 180 F degrees or 82 C, degrees (reservoir temperature)				Industry Standard	130 Degree F
	Determine if hydraulic return pressure gauge is working and giving accurate measurements. Record readings					
	RECORD HYDRAULIC RETURN PRESSURE PARAMETERS:			60 PSI "maximum"	OEM Manual	60 PSI
	Change hydraulic return filters and seals				OEM Manual	(✓) YES ( ) NO
	Function Testing and record pressures with engine at :			2,200 RPM	API RP 2D	
	BOOM FUNCTION TEST (Need Crane Mech to verify each platform)				OEM Manual	
	Boom Angle : 60 Degree (Recommend or as applicable)	UP	Cracking pressure	RECORD	OEM Manual	600 PSI
			Full Speed Pressure	RECORD	OEM Manual	800 PSI
		DOWN	Cracking pressure	RECORD	OEM Manual	1000 PSI
			Full Speed Pressure	RECORD	OEM Manual	1300 PSI
	MAIN HOIST FUNCTION TEST (Need Crane Mech to verify each platform)				OEM Manual	
	Boom Angle : 60 Degree (Recommend or as applicable)	UP	Cracking pressure	RECORD	OEM Manual	100 PSI
			Full Speed Pressure	RECORD	OEM Manual	500 PSI
		DOWN	Cracking pressure	RECORD	OEM Manual	1500 PSI
			Full Speed Pressure	RECORD	OEM Manual	1300 PSI
	AUX HOIST FUNCTION TEST (Need Crane Mech to verify each platform)				OEM Manual	
	Boom Angle : 60 Degree (Recommend or as applicable)	UP	Cracking pressure	RECORD	OEM Manual	100 PSI
			Full Speed Pressure	RECORD	OEM Manual	500 PSI
		DOWN	Cracking pressure	RECORD	OEM Manual	1500 PSI
			Full Speed Pressure	RECORD	OEM Manual	600 PSI
	SWING FUNCTION TEST (Need Crane Mech to verify each platform)				OEM Manual	
	Boom Angle : 60 Degree (Recommend or as applicable)	LEFT	Cracking pressure	RECORD	OEM Manual	100 PSI
			Full Speed Pressure	RECORD	OEM Manual	500 PSI
		RIGHT	Cracking pressure	RECORD	OEM Manual	100 PSI
			Full Speed Pressure	RECORD	OEM Manual	300 PSI
Electrical system, Crane Boom Lighting and red obstruction light	Check the electrical junction boxes, wires and connections for deterioration, desiccant bags, (replace as required)				Industry Standard	(✓) YES ( ) NO
	Check the condition of the grounding and lighting protection system.				Company Spec/Standard	(✓) YES ( ) NO
	Visually inspect boom floodlight and light guards for loose, missing, corroded				Company Spec/Standard	(✓) YES ( ) NO
	Check condition pipe support , U-bolt ,nuts of boom floodlight and Electric slipring for loose , missing , corroded				Company Spec/Standard	(✓) YES ( ) NO
	Check Electric slipring/swivel for 360° continuous rotation				OEM Munnal	(✓) YES ( ) NO
	Check Water ingress, condensation in electric slipring, red obstruction light and boom floodlight				OEM Munnal	(✓) YES ( ) NO
	Check feely movement and lubricate of boom floodlight				OEM Munnal	(✓) YES ( ) NO
	With generator in operation, intergize all lights to unsure proper function.				API RP 2D	(✓) YES ( ) NO
	Check condition of crane boom lighting and safety net is secured with strong point. * **Safety net should be replace 24 months after installation (2 year)***			Last installation date _____	Company Spec/Standard	(✓) YES ( ) NO
	Check function of crane sound signal				Company Spec/Standard	(✓) YES ( ) N/A ( ) NO
	Check function of crane boom lighting at boom upper section				Company Spec/Standard	(✓) YES ( ) N/A ( ) NO
	Check function of crane boom lighting at boom lower section				Company Spec/Standard	(✓) YES ( ) N/A ( ) NO
	Check function of crane boom lighting at winch skid				Company Spec/Standard	(✓) YES ( ) N/A ( ) NO
	Check function of crane boom lighting at crane cabin				Company Spec/Standard	(✓) YES ( ) N/A ( ) NO
	Check function becon light at boom tip				Company Spec/Standard	(✓) YES ( ) N/A ( ) NO
	Inspection wire rope guide & Roller assembly				Company Spec/Standard	(✓) YES ( ) NO
	Visually inspect red obstruction light pipe support, u-bolts, nuts connection to hand rail for loose, missing, corroded				Company Spec/Standard	(✓) YES ( ) NO
	Visually inspect safety sling attached to the red obsruction light and its base for loose, missing, corroded				Company Spec/Standard	(✓) YES ( ) NO
	Visually inspect red obstruction light function. The light is designed to turn on all the time.				Company Spec/Standard	(✓) YES ( ) NO
Operator Control Station	Check general condition of control panel, bolts, paint security, etc.				API RP 2D	(✓) YES ( ) NO
	Determine if there is a serviceable fire extinguisher in the vicinity of the crane				Company Spec/Standard	(✓) YES ( ) NO
	Determine if correct load chart is in use and easily visible for operator				API RP 2D	(✓) YES ( ) NO

SYSTEM	TASK	Specification	Record/Reading
	Determine if charts, indicators and hand signal chart are in the cabling and firmly attached	API RP 2D	(✓) YES ( ) NO
	Determine if angle/radius indicator plate is easily visible to operator and is moving freely.	API RP 2D	(✓) YES ( ) NO
	Check condition of control levers and determine if they "dead-man" back to the neutral position.	API RP 2D	(✓) YES ( ) NO
	Check condition of pressure gauges.	API RP 2D	(✓) YES ( ) NO
	Check proper control labels are firmly installed, completely legible and properly labeled	API RP 2D	(✓) YES ( ) NO
	Check controls for freedom-of-movement	API RP 2D	(✓) YES ( ) NO
	Check condition , Leak, freely moement of Dynamic swing break system *** Note; If HYD Oil loose in CYD reservoir must be refill*	OEM Manual	(✓) YES ( ) NO
	Check condition , Leak, freely moement of Accelerate System *** Note; If HYD Oil loose in CYD reservoir must be refill*	OEM Manual	(✓) YES ( ) NO
	Check all safety glass and rubber seal for proper condition	API RP 2D	(✓) YES ( ) NO
	Function Test Horn	Industry Standard	(✓) YES ( ) NO
	Ensure PRE/POST Check List and Pocket Manual in the cabin	Company Standard	(✓) YES ( ) NO
Load Indicator System	Visual check on fittings and connections for leaks. Fix leak if any.	OEM Manual	(✓) YES ( ) NO
	Should any leaks exist, stop leak and recharge system, refer to maintenance manual	OEM Manual	(✓) YES ( ) NO
	Change Load cell fluid	OEM Manual	(✓) YES ( ) NO
	Check general condition of tubbing, hoses, pins bolts, paint, etc.	Industry Standard	(✓) YES ( ) NO
	Insure load cell is free of obstructions	OEM Manual	(✓) YES ( ) NO
	Check condition of gauge(s) face and clean glass as required.	OEM Manual	(✓) YES ( ) NO
	Check weight indicator function (Main)	Company Spec/Standard	(✓) YES ( ) NO
	Check weight indicator function (Aux)	Company Spec/Standard	(✓) YES ( ) NO
	Check weight indicator fluid, top up if required	Industry Standard	(✓) YES ( ) NO
	Insure Safe Working Load, matches ratings on the Crane Load Chart	OEM Manual	(✓) YES ( ) NO
	Insure Boom Length, matches the Crane Load Chart	OEM Manual	(✓) YES ( ) NO
	Insure Boom Angle measurements and readings match the boom angle indicator.	OEM Manual	(✓) YES ( ) NO
	Insure Boom Radius measurements indicate the distance from center line of the crane to the hook	OEM Manual	(✓) YES ( ) NO
	Check Main load cell gap 1/4 (0.250) inch	OEM Manual	(✓) YES ( ) NO
	Check Aux load cell gap 3/8(0.380) inch (Compression Load Cell Type)	OEM Manual	(✓) YES ( ) NO
	Check weight indicator accuracy "maximum variance +/- 2%	Industry Standard	(✓) YES ( ) NO
Pedestal & Structure	Visually check Pedestal for chipped/cracked paint, deformation, worn parts, dents, corroded areas, cracks weld, etc.	API RP 2D	(✓) YES ( ) NO
	Check water rain drain at pedestal must be not obstuct	Industry Standard	(✓) YES ( ) NO
	Check pin and cotter pin of pedestal missing , corrosion, wear, damage and exercise pin.	Industry Standard	(✓) YES ( ) NO
	Visually check Base - Plate connection and Base hoist Structure for chipped/cracked paint, deformation, worn parts, dents, corroded areas, cracks weld, etc.	API RP 2D	(✓) YES ( ) NO
	Check A fixed such as Handrial, Walkway, Grating, stationary structure without significant movement in response to waves and currents in normal operating conditions.	API RP 2C	(✓) YES ( ) NO
	Visually check and lubricate maintenance Jib. ***Note*** If on pedestal crane	OEM Manual	(✓) YES ( ) NO
	Check maintenance jib is secure firmly. ***Note*** If on pedestal crane	OEM Manual	(✓) YES ( ) NO
Box Boom & Luffing CYD	Check and Verify entire box boom and Boom CYD for loss of protective coating and corrosion	API RP 2D	(✓) YES ( ) NO
	Check and Verify entire box boom and Boom CYD for chipped/cracked paint, deformation, worn parts, dents, corroded areas, cracks, etc.	API RP 2D	(✓) YES ( ) NO
	Check and Verify boom end connections, for bends, dents, corroded areas, cracked welds, and signs of mechanical damage, wear, etc. **any deviation should be reported**	API RP 2D	(✓) YES ( ) NO
	Check and Verify boom rest and wooden support to ensure it's in good condition	API RP 2D	(✓) YES ( ) NO
	Inspect pin and pin holes of Upper tank and Lower tank for excessive clearance	OEM Manual	(✓) YES ( ) NO
	BOOM CYLINDER PIN MAXIMUM TOLERANCE — 1/8" (3mm)	Industry Standard	
	Check BOOM CYLINDERS for proper operation and good condition	API RP 2D	(✓) YES ( ) NO
	Check Boom cylinder barrels and rods for leaks, mechanical damage and corrosion	Industry Standard	(✓) YES ( ) NO
	Check and measurement boom foot pin and connection pins for clearance	Industry Standard	
	BOOM FOOT PINS & BOOM BOX CONNECTER PIN TOLERANCE — 1/8" (3mm)	Industry Standard	
	Boom Foot Pin Tolerance — by Visual Check.	Industry Standard	On inch
	Boom Box Connecter Pin Tolerance	Industry Standard	On inch
	Check connecting bolts of box boom loose, corrosion, wear, damage	OEM Manual	(✓) YES ( ) NO
	Lubricate boom foot pins and bushings	OEM Manual	(✓) YES ( ) NO
	Lubricate boom cylinder pins, bearings and bushings	OEM Manual	(✓) YES ( ) NO
	Boom function test angle/radius to correction **Note; The cylinder(s) mechanism shall be capable of elevating the boom from a minimum of zero degrees to the maximum recommended boom angle.	API RP 2C	(✓) YES ( ) NO
	Operation functional test and verify Boom Creeping down **Note ; Test at angle 60 °	Industry Standard	(✓) YES ( ) NO
Wire Rope	Determine if parts-of-line match parts of line on the load chart in the crane cabin.	API RP 2D	(✓) YES ( ) NO
	Determine if visible portion of wire rope adequately lubricated. If not lubricate wire rope	API RP 2D	(✓) YES ( ) NO
	For each layer of wire rope on drum, check that all rope is parallel and each crossover point at hoist flanges is correct	API RP 2D	(✓) YES ( ) NO
	The top layer of rope must not be lower to the flange tips 2.5 in for Smooth drum,2 in for groove drum or 2.5 times of wire rope diameter	API RP 2C	(✓) YES ( ) NO
	Inspect wire rope for, kinking, crushing, broken wires, necking down of rope diameter, worn outside wires, corroded or broken wires at end connection, cutting or unstringing.	API RP 2D	(✓) YES ( ) NO
	NoteRunning Ropes of rotation-resistant construction used in the main or auxiliary Hoist: - Four (4) Randomly distributed broken wires within 30 rope diameter - Two (2) broken wires in one stand within 6 rope diameter	API RP2D Edition 7	None
	One valley break can indicate internal rope damage requiring close inspection of this section of the rope. When one or more valley breaks are found in one lay length the rope should be retired.	API RP2D Edition 7	None

SYSTEM	TASK		Specification	Record/Reading
	Reductions for the rope diameter, from initial wire rope dimensional measurements, in a nonworking area (an area away from the sheaves) compared to the lowest diameter of rope measured in three working areas (areas where the rope regularly goes over a sheave) of more than the following is observed: — 3/64 in. (0.047 in.) (1.2 mm) for diameters up to and including 3/4 in. (19.1 mm); — 1/16 in. (0.062 in.) (1.6 mm) for diameters of 7/8 in. to 1-1/8 in. (22.2 mm to 28.6 mm); — 3/32 in. (0.093 in.) (0.8 mm) for diameter of 1-1/4 in. to 1-1/2 in. (31.8 mm to 38.1 mm); — For rope diameters greater than 1-1/2 in., a 5 % diameter loss from baseline measurement. —Wear of one-third the original diameter of the outside individual wires		API RP2D Edition 7	None OK
	Increase in the length of an individual rope lay is observed. This increase in lay length and accompanying reduction in diameter can be caused by failure of the core. This can occur more readily in ropes or rotation-resistant construction.		API RP2D Edition 7	(✓) YES ( ) NO
	-Inspection and Verify running and standing rope from heat effect **Note; Not more than 250°C -There is evidence of heat damage from any source (i.e. engine exhaust, flare towers, stress corrosion cracking, etc.). Heat can be generated by passing a rope over a frozen or non-turning sheave, contact with structural members of the crane, improperly grounded welding leads or lightning strikes		Industry Standard	(✓) YES ( ) NO
	With the boom at the highest possible angle and the main load block or overhaul ball at the water level, ensure there is a minimum of 5 wraps of wire-rope remaining on the drums. Note: (Thai law, requires minimum of 2 wraps)		API SPEC 2C / Thai Law	(✓) YES ( ) NO
	Reference: · Running rope safety factor not less than 6 for wire rope that are running wire, (Thai law; Wire rope nominal breaking strength x number parts of line / Design factor 6) · Standing rope safety factor not less than 3.5 for wire rope that are stay cables, (Thai law)		Thai Law	(✓) YES ( ) NO
	Inspection corrosion, erosion, broken, loosen of pin, cotter pin, socket, and exercise pin of pendent line		Industry Standard	(✓) YES ( ) NO
	Measure and record nominal diameter of "running ropes"main and auxiliary (particularly on drum, equalizer sheave and at sockets, clips and dead end points) ******Nominal = several measurements added together divided by Number of measurements*******		API RP 2D	(✓) YES ( ) NO
	Inspect wire rope and record size below:		API RP 2D	
	MAIN WIRE ROPE OD:	FULL DRUM	OEM Manual	0.694 inch
		HALF DRUM	OEM Manual	0.685 inch
		WATER LEVEL	OEM Manual	0.685 inch
	AUX WIRE ROPE OD:	FULL DRUM	OEM Manual	0.650 inch
		HALF DRUM	OEM Manual	0.650 inch
		WATER LEVEL	OEM Manual	0.650 inch
	Slip-Cut 1 meter of all ropes at the wedge socket and re-wedge to prevent rust inside of wedge socket (at outward end of rope, not on hoist drum) Dead end tail length is never less than 6 inches, or: - Standard 6 to 8 Strand wire rope is not less than 7 times the rope diameter - Rotation Resistant Wire Rope is not less than 20 times the rope diameter		Company Spec/Standard	(✓) YES ( ) NO
	U-bolt and Fist Grip Clips: Extreme care should be exercised to assure proper orientation of U-bolt clips. The U-bolt segment shall be in contact with the wire rope dead-end. The orientation, spacing, torquing, and number of all clips shall be in accordance with the crane manufacture's specifications.		API SPEC 2C	(✓) YES ( ) NO
	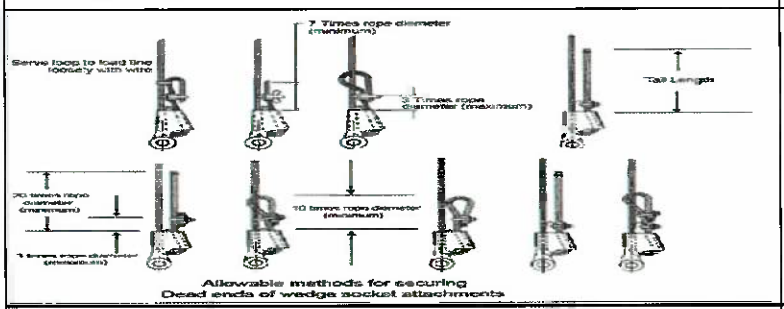		API SPEC 2C	
	Verify that the wedge socket and wedge are the correct size for the rope in use and record the size		API SPEC 2C	(✓) YES ( ) NO
Sheaves & Bearings	Lubricate all sheave bearings		API RP 2D	(✓) YES ( ) NO
	Visually inspect all sheaves and bushings for cracks, wear and deterioration		API RP 2D	(✓) YES ( ) NO
	Visually inspect wire rope track of sheave for rope imprints, wear and deterioration. If damage exist sheave should be resurfaced or replaced.		API RP 2D	(✓) YES ( ) NO
	Pins retained by snap rings, bolt lock shafts, plates lock should be checked for missing or loose for all		API RP 2D	(✓) YES ( ) NO
	Check wirerope guards and keepers for proper location and condition.		API RP 2D	(✓) YES ( ) NO
	Determine if wire rope is jumping the sheaves, by looking for signs of damage on the sheave brim		Industry Standard	(✓) YES ( ) NO
	Sheave Rope Profile for optimum Rope life the sheave groove profile should be correctly matched to the rope diameter		Industry Standard	(✓) YES ( ) NO
	Check rope sheave should be machine grooved to adepth of not less than 1.5 times the norminal diameter of the rope		Industry Standard	(✓) YES ( ) NO
	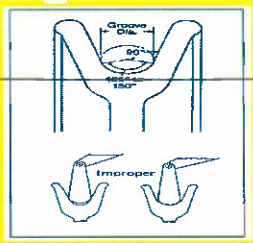	MAIN POINT SHEAVES:	Industry Standard	Sheave No.1 (✓) YES ( ) NO Sheave No.2 (✓) YES ( ) NO
		AUX SHEAVES:	Industry Standard	Sheave No.1 (✓) YES ( ) NO
		IDLER SHEAVES:	Industry Standard	Sheave AUX. (✓) YES ( ) NO Sheave Main (✓) YES ( ) NO

SYSTEM	TASK	Specification	Record/Reading
	Pins for bronze bushing and straight roller bearing should have a running clearnace of .031 inch/ sheave of end play and should be adjusted accordingly.(count from left)	Industry Standard	(✓) YES ( ) NO
	MAIN POINT SHEAVES:	Industry Standard	Sheave No.1 16 inch Sheave No.2 18 inch
	AUX SHEAVES:	Industry Standard	14 inch
	IDLER SHEAVES:	Industry Standard	Sheave AUX. 16 inch Sheave Main 18 inch.
	Ensure the sheaves are aligned and the fleet angle is correct **Remark ; Wire rope User's Manual allows 2 degree on grooved winch drum, Smooth Drum shuold be not more than 1-1/2 degree	API RP 2D	(✓) YES ( ) NO
	Determine if wire rope size and sheave sizes/grooves are compatible and record size. Sheave pitch diameter (D) to nominal wire rope diameter (d) ratio (D/d) shall not be less than 18:1	API SPEC 2C	(✓) YES ( ) NO
	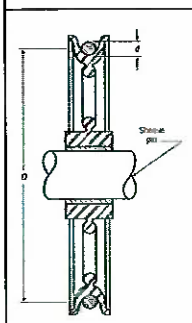 MAIN POINT SHEAVES: SHEAVE D / WIRE ROPE d = >18	API SPEC 2C	18 inch (D) 5/8 inch (d) 28 (Ratio D/d)
	AUX SHEAVES: SHEAVE D / WIRE ROPE d = >18	API SPEC 2C	14 inch (D) 5/8 inch (d) 22 (Ratio D/d)
	IDLER SHEAVES: SHEAVE D / WIRE ROPE d = > 18 (If applicable)	API SPEC 2C	18 inch (D) 5/8 inch (d) 28 (Ratio D/d)
	MAIN BLOCK SHEAVES: SHEAVE D / WIRE ROPE d = > 16	API SPEC 2C	16 inch (D) 5/8 inch (d) 25 (Ratio D/d)
Load Block	**Load Block:** Check the load block for cleanliness, binding sheaves, damaged or worn sheaves, worn or distorted sheave pins, broken bolts, and worn cheek weights.	Industry Standard	(✓) YES ( ) NO
	Hook: Check the hook damage, excessive wear to the hook safety latch, hook swivel trunnions, thrust collar, securing, damage or missing lubrication fittings, proper lubrication, cracks and gouges, and if visibly bent or twisted or has been exposed to welding or arching.	Industry Standard	(✓) YES ( ) NO
	Hook: Tip has been bent more than 10 degree out of plane from the hook body	Industry Standard/API RP2D7	(✓) YES ( ) NO
	Pins for bronze bushing and straight roller bearing should have a running clearnace of .031 inch/ sheave of end play and should be adjusted accordingly	Industry Standard	(✓) YES ( ) NO
	Hook or shackle to swivel case clearance is set at .031 to .062 inch, Clearance exceeding .12 to .18 (ONLY CROSBY BRAND)	OEM Crosby	(✓) YES ( ) NO
	OEM STANDARD RECOMMEND that Crane block removal from service untill replaced and repair following below	**OEM STANDARD**	
	- Elongated center pin and hook trunnion holes exceeding 5% of Original diameter	**OEM STANDARD**	(✓) YES ( ) NO
	-Material loss due to wear exceeding 10% of original section	**OEM STANDARD**	(✓) YES ( ) NO
	-Sheave wire rop groove diameter smaller than 2.5%	**OEM STANDARD**	(✓) YES ( ) NO
	Loosened tie bolts nuts, center pin round nuts, check weight cap screws and hook nut cap screws. Tie bolt nuts to be torqued to 35-40 ft.Lbs and restaked, all other fasteners wrench tight	**OEM STANDARD**	(✓) YES ( ) NO
	Throat opening - any distortion causeing an increase in throat opening of 5% not ot exceed 1/4 in. (6 mm.)(or as recommended by the manufacturer)	**ASME B30.10**	(✓) YES ( ) NO
	Inspect rope track worn in sheave groove, sheave must be resurface or replace	API RP 2D	(✓) YES ( ) NO
	Ensure the load block is not using **"Cast Iron"** cheek weights they can not be used as per API	API SPEC 2C	(✓) YES ( ) NO
	Determine if all hooks are equipped with properly operating safety latches and check for proper functioning	API RP 2D	(✓) YES ( ) NO
	Lubricate sheave bearings and swivels	OEM Manual	(✓) YES ( ) NO
	Re-thighten nut firmly to point at which trunion will just rotate, the Re-tighten set-screw in nut and thread condition as in the picture below,	Industry Standard	(✓) YES ( ) NO
	Last NDE inspection record	Industry Standard	Last inspect date 7 May 8
	RECORD LOAD BLOCK INFORMATION : Manufacturer:	OEM Manual	McKissgen
	Model:	OEM Manual	M028 D16 P
	Serial Number:	OEM Manual	064 0380
	Record Load block measurements and details for future comparison with historical data	Industry Standard	(✓) YES ( ) NO
	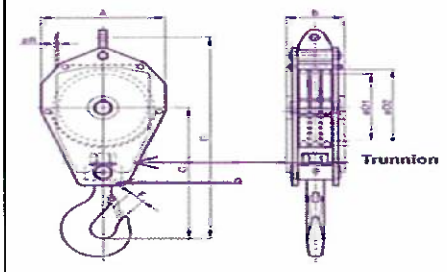 A - Block OD	Industry Standard	19 1/2 mm/ inch
	B - Block length	Industry Standard	43 1/2 mm/ inch
	C - Center of Pin to hook Saddle	Industry Standard	38 mm/ inch
	D1 - Sheave Diameter	Industry Standard	16 mm/ inch
	E - Block Width	Industry Standard	37 1/2 mm/ inch
	F - Throat Opening	Industry Standard	57 mm/ inch
	G - Trunnion	Industry Standard	0.050 mm/ inch
Aux. Ball	**Inspect Auxiliary ball** for cleanliness, binding swivel, work pad-eye hole. Inspect the hook damage, excessive wear to the hook safety latch, Bent connector plates,Severe corrosion pitting, hook swivel trunnions, thrust collar, securing, damage or missing lubrication fittings,Loose, missing or damaged retaining nuts, cotter pins or swivel set screws ,Missing or illegible rating and warning tags, proper lubrication, cracks and gouges, and if visibly bent or twisted or has been exposed to welding or arching.	Industry Standard	(✓) YES ( ) NO
	Hook: Tip has been bent more than 10 degree out of plane from the hook body	Industry Standard/API RP2D7	(✓) YES ( ) NO

SYSTEM	TASK	Specification	Record/Reading
	OEM STANDARD recommend that Crane overhaul ball removal from service untill replaced and repair following below	**OEM STANDARD**	
	- Elongated ball pin holes, hook latch pin holes and swivel eye exceeding 5% of original diameter,	**OEM STANDARD**	(✓) YES ( ) NO
	-Swivel end play gap exceeding .08". Excessive end play indicates damaged internal set screw	**OEM STANDARD**	(✓) YES ( ) NO
	-Material loss due to wear exceeding 10% of original section	**OEM STANDARD**	(✓) YES ( ) NO
	Throat opening - any distortion causeing an increase in throat opening of 5% not ot exceed 1/4 in. (6 mm.)(or as recommended by the manufacturer)	**ASME B30.10**	(✓) YES ( ) NO
	All hooks that lift personnel are to have a positive locking safety latch **locking Pin to be used while lifting personnel**	API RP 2D	(✓) YES ( ) NO
	*** Temperature Effected : When hooks are to be used at temperature above 400° F. (204°C) or below -40°F (-40°C), the hook manufacturer or a qualified person should be consulted *** Chemically Active Environment : The strength of hooks can be affected by chemically active environments, such as caustic or acid substances or fumes. The hook manufacturer or qualified person should be consulted before hooks are used in chemically active environment	**ASME B30.10**	
	Verify to ensure nut firmly at which trunion rotate. Identify to set-screw in nut/ swivel/ counter pin and thread condition.	Industry Standard	(✓) YES ( ) NO
	Last NDE inspection record	Industry Standard	Last inspect date 1 May 13
	RECORD AUX BALL INFORMATION : — Manufacturer:	OEM Manual	MZ Wenglein
	Model:	OEM Manual	MB 027 200E
	Serial Number:	OEM Manual	06 1409
	Record Auxiliary Ball measurements and details for future comparison with historical data: For Model MB07T200E ONLY	Industry Standard	
	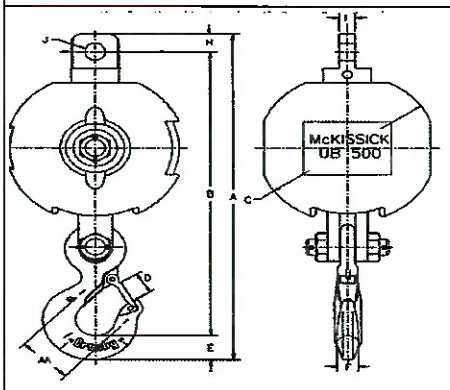 AA Dimensions 3.0 Inch	Industry Standard	3 mm/ inch
	A Dimensions 24.89 Inch	Industry Standard	24.8 mm/ inch
	B Dimensions 21.71 Inch	Industry Standard	21.71 mm/ inch
	C Dimensions 12.50 Inch	Industry Standard	12.70 mm/ inch
	D Dimensions 1.61 Inch	Industry Standard	1.61 mm/ inch
	E Dimensions 1.81 Inch	Industry Standard	1.81 mm/ inch
	F Dimensions 1.38 Inch	Industry Standard	1.38 mm/ inch
	H Dimensions 1.38 Inch	Industry Standard	1.38 mm/ inch
	I Dimensions 0.88 Inch	Industry Standard	0.88 mm/ inch
	J Dimensions 1.31 Inch	Industry Standard	1.31 mm/ inch
	Record Auxiliary Ball measurements and details for future comparison with historical data: For Model OB 7EE 200-4	Industry Standard	
	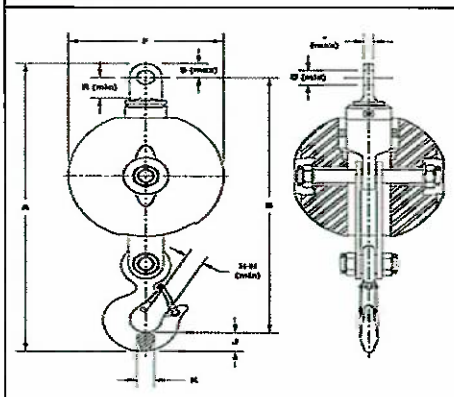 A Dimensions 27.25 Inch	Industry Standard	____ mm/ inch
	B Dimensions 24.10 Inch	Industry Standard	____ mm/ inch
	F Dimensions 12.00 Inch	Industry Standard	____ mm/ inch
	H-H Dimensions 1.38 Inch	Industry Standard	____ mm/ inch
	J Dimensions 1.81 Inch	Industry Standard	____ mm/ inch
	K Dimensions 1.46 Inch	Industry Standard	____ mm/ inch
	R Dimensions 1.55 Inch	Industry Standard	____ mm/ inch
	S Dimensions 1.34 Inch	Industry Standard	____ mm/ inch
	T Dimensions 1.03 Inch	Industry Standard	____ mm/ inch
	U Dimensions 1.31 Inch	Industry Standard	____ mm/ inch
Safety system	Check Condition anti - two block , hanging chain ,eye bolts , fix bolts , shackle for missing , corrosion , erosion , deformation	API RP 2D	(✓) YES ( ) NO
	Check anti - two block kick out plate for freely movement	Company Spec/Standard	(✓) YES ( ) NO
	Check anti-2-block device proper function of Main winch	Company Spec/Standard	(✓) Function ( ) False
	Check anti-2-block device proper function of Aux. winch	Company Spec/Standard	(✓) Function ( ) False
	Check relation of boom radius and boom angle (lowest, middle, highest) with refrence to load chart. Recharge fluid W-15 to load indicator, if required.	API RP 2D	(✓) YES ( ) NO
	Functional test of emergency lowering system (See procedure in Emergency Load Lowering Box). **Note:** Keep for 1 Yr PM to sustain crane mechanic competency. **Caution:** Function test must be performed on top deck with max 2-foot height.	Company Spec/Standard	(✓) Function ( ) False
	Visually check emergency load lowering kit. Ensure EMERGENCY LOWERING PROCEDURE and MATERIAL LIST are in the box. - Ensure ALL items shown on the list are in the box and in good condition - SECURE THE BOX WITH A TIE WRAP.	Company Spec/Standard	(✓) YES ( ) NO
Slew Mechanism	Visually check for damage and excessive wear on gear teeth	OEM Manual	(✓) YES ( ) NO
	Visually check slew gear box in the area of oil seal for any leaks	API RP 2D	(✓) YES ( ) NO
	RECORD SLEW GEAR BOX INFORMATION : — Manufacturer:	OEM Manual	Fesu
	Model:	OEM Manual	23 080 1 L 449
	Serial Number:	OEM Manual	
	CHECK and RE-TORQUE swing drive gearbox mounting bolts at following brands: - ESKRIDGE, Model: 250 = 150 FT-LBS	API RP 2D	150 FT-LBS

SYSTEM	TASK		Specification	Record/Reading
	Check swing gearbox oil level/condition, top up if required	Meropa 220	OEM Manual	(✓) YES ( ) NO
	Monitor slew gearbox oil condition by visually examine for burnt smell, metal particles, and/or other contaminants, record and change if found.		OEM Manual	(✓) CHANGE OIL (✓) NOT CHANGE OIL
	Change slew gear box oil		OEM Manual	(✓) CHANGE OIL ( ) NOT CHANGE OIL
	Grease all pivot points of slew ring (bearing)		OEM Manual	(✓) YES ( ) NO
	Grease open gears (pinion)		OEM Manual	(✓) YES ( ) NO
	Rotate crane 360 degree and check smoothness of operation		OEM Manual	(✓) YES ( ) NO
	Check swing drive static parking brake for proper operation Caution: DO NOT stop the swing of the crane with this static brake (parking brake)		OEM Manual	(✓) YES ( ) NO
	Check swing drive dynamic parking brake for proper operation		OEM Manual	(✓) YES ( ) NO
	Check swing lock mechanism condition; corrosion ,dent , loos all part,worn and wear		OEM Manual	(✓) YES ( ) NO
	Check swing lock mechanism freely lock and unlock for function		OEM Manual	(✓) YES ( ) NO
	Check condition of slew ring bolts e.g. Bolt grade and washers. Caution: Use only hardened flat washers under head of bolt. Do not use lock washers, or regular flat washers.		Industry Standard	(✓) YES ( ) NO
	Monitor ball-ring grease sample. If found wear and tear particles, take sample and send to lab. **Wear assessment by grease sample analysis—wear may be monitored by periodic grease sample analysis as describe in this section. Grease samples should be collected every twelve months as a minimum and the results of the analysis recorded; this period should be shortened if obvious metal or contaminants are present.		API PR 2D	( ) SEND TO LAB (✓) NOT SEND TO LAB
	Verify crane condition and load test as separate procedure.		API 2C	(✓) YES ( ) NO
	Verify crane condition and load test as separate procedure.		Ig.1	(✓) YES ( ) NO

Table 1—Static/Onboard Test Load and Radius

Static/Onboard Rated Load at a Specific Radius lb (kg)	Test Loads In Excess of Static/Onboard Rated Load at a Specific Radius
≤ 40,000 (18,144)	25 %
> 40,000 ≤ 100,000 (>18,144 ≤ 45,356)	10,000 lb (4536 kg)
> 100,000 (45,356)	10 %

Risk Level Definitions: The following 3 levels indicate the impact the noted deficiency poses to the operation or structural integrity of the equipment:

Level 1 = Incidental	Level #2 = Restricted Operation	Level #3 =Out of Service
Minor deficiency that is recommended to be promptly addressed, but poses no safety and/or environmental risk. The crane can still be operated at full duty.	Deficiency identified that has the potential to limit, de-rate or damage the crane, its surroundings and/or the environment. The duty and locked/ tagged out until the crane's duty and operation should be de-rated or service restricted.	The crane should be removed from duty and locked/ tagged out until the deficiency is rectified.

System: Swing	Risk Level: 2	Component: / Location: Swing Brake	In Accordance with: / Date Originated: Man
Description:	Need to replace Asco Brake (leaking)		
Recommended Action:			
Recommended urgency timeframe for corrective action:		Completed Date:	Completed By:

System:	Risk Level:	Component: / Location: Hose	In Accordance with: / Date Originated:
Description:	-16X120" from DCV Swing to Return manifold.		
Recommended Action:			
Recommended urgency timeframe for corrective action:		Completed Date:	Completed By:

System:	Risk Level:	Component: / Location: Hose	In Accordance with: / Date Originated:
Description:			
Recommended Action:	-12 X 135" from DCV boom to boom cylinder R. (up)		
Recommended urgency timeframe for corrective action:		Completed Date:	Completed By:

System:	Risk Level:	Component: / Location:	In Accordance with: / Date Originated:
Description:			
Recommended Action:			

SYSTEM	TASK		Specification		Record/Reading
Recommended urgency timeframe for corrective action:		Completed Date:		Completed By:	

System:	Risk Level:	Component:		In Accordance with:	
		Location:		Date Originated:	
Description:					
Recommended Action:					
Recommended urgency timeframe for corrective action:			Completed Date:	Completed By:	

System:	Risk Level:	Component:		In Accordance with:	
		Location:		Date Originated:	
Description:					
Recommended Action:					
Recommended urgency timeframe for corrective action:			Completed Date:	Completed By:	

CRANE Mfg. : Nautilus
MODEL: 180B-80
SERIAL NUMBER : Crane Specific

LOCATION: NJWA

DATA BASE - PM JOB TASK CARD 3Y. PM.
WO: 1250747

Crew Size: 4
Estimated Hours:

SYSTEM	TASK		Specification	Record/Reading
Safety	Perform Job Safety Analysis (JSA)		Company Spec/Standard	(✓) YES ( ) NO
	Obtain "COMPANY' PERMIT TO WORK		Company Spec/Standard	(✓) YES ( ) NO
	Perform Tool Box Talk		Company Spec/Standard	(✓) YES ( ) NO
	BEFORE/AFTER JOB EXECUTION: Ensure to comply with isolation procedure (LOCK OUT/TAG OUT, WARNING SIGNS and BARRIERS).		Company Spec/Standard	(✓) YES ( ) NO
Required Tools	Insure proper tools are available at the job site		Company Spec/Standard	(✓) YES ( ) NO
	Tool bag		Company Spec/Standard	( ) YES (✓) NO
	Tool box		Company Spec/Standard	(✓) YES ( ) NO
	Tool Container		Company Spec/Standard	(✓) YES ( ) NO
	MPI equipment and operator		Company Spec/Standard	(✓) YES ( ) NO
	Check safety harness Software and Hardware should be good condition before use		Company Spec/Standard	(✓) YES ( ) NO
	Check Rescue Equipment ready to use onsite		Company Spec/Standard	(✓) YES ( ) NO
	Portable Scaffolding and Crew if require		Company Spec/Standard	(✓) YES ( ) NO
Lubricants	Insure proper lubricants and consumables are available at the job site.		Company Spec/Standard	(✓) YES ( ) NO
	Hydraulic System - Hydraulic Oil	Rando HD-68	OEM Manual	(✓) YES ( ) NO
	Slew Gearbox - Gear Oil	Meropa 220	OEM Manual	(✓) YES ( ) NO
	Auxiliary Hoist - Gear Oil	Meropa 220	OEM Manual	(✓) YES ( ) NO
	Main Hoist - Gear Oil	Meropa 220	OEM Manual	(✓) YES ( ) NO
	Grease Points - Lithium Based **IT MUST NOT INCLUDE MOLYBDENUM DISULPHIDE**	MULTIFAK EP#2	OEM Manual	(✓) YES ( ) NO
	Open Gear Teeth - Open Gear Lube highly water resistant and of an adhesive nature.	OMEGA 73	OEM Manual	(✓) YES ( ) NO
	Wire rope Lubricant Company preferred grade	Birtube 70	OEM Manual	(✓) YES ( ) NO
	Engine Oil - SAE Grade 15W-40 (Delo Gold)	15W-40	OEM Manual	(✓) YES ( ) NO
	Safe Load Indicator fluid	W-15	OEM Manual	(✓) YES ( ) NO
	Engine Radiator - Should have radiator preservatives additives	Cat® SCA	OEM Manual	(✓) YES ( ) NO
Consumables	Spray Cold Galvanize		Company Spec/Standard	(✓) YES ( ) NO
	Denso Tape		Company Spec/Standard	(✓) YES ( ) NO
	WD-40		Company Spec/Standard	(✓) YES ( ) NO
History Review	Before starting work, tasks preparation at least 1 day prior to starting work: 1. Review history PM/ CM from Roving Team, 2. Review last PM/ CM/ PMI from Crane Mech, 3. List out all punch list and prepare parts. 4. Review last Certificate task performed		API RP 2D	(✓) YES ( ) NO
	Require to update part history from Crane Mech on following main compenents to ensure the right parts are prepared: - Aux/ Main/ Boom Cylinder, Engine, Swing Gearbox, etc. Reference: Crane OEM information of each part need to be recorded - Manufacturer & Contact info - Model & serial number - Installation date		Company Spec/Standard	(✓) YES ( ) NO
	Review history data from Certificates and incorporate into current PM: - Pull Test Certificates (ongoing update, 4 yr. history). - Load Test Certificates (ongoing update, 4 yr. history). - Wire Rope Certifications (running rope and standing rope) (life of rope). - Hoist Certifications for hoist classified as "personnel handling" hoist.		API RP 2D	(✓) YES ( ) NO
	Review Last Preventative Maintenance Records (Inspection Reports) - Pre-use (Pre-Post Inspection) - 6 Monthly (API RP 2D Not Defined, Company Standard) - 1 Yearly (API RP 2D Defined Annual Inspection)		API RP 2D	(✓) YES ( ) NO
Lifting Gear Preparation	Visually Inspect (Sling, sling hooks and shackles) include Websling / Chain		Company Spec/Standard	(✓) YES ( ) NO
	Check color code / Tag & date inspection		Company Spec/Standard	(✓) YES ( ) NO
General	Determine if access route to-from crane is clean, safe, unobstructed and adequately protected against falls, tripping and slipping		Company Spec/Standard	(✓) YES ( ) NO
	Check drain lines and drip pans for deterioration		API RP 2D	(✓) YES ( ) NO
	Remove any sediment collected in the bottom of drip pans		Industry Standard	(✓) YES ( ) NO
	Check for general crane and components for loss of protective coating and corrosion		Industry Standard	(✓) YES ( ) NO
	Check for missing or loose ,corrosion, deformation pins, pin keepers, bolts, nuts, fasteners of all laders, cages and working platform		API RP 2D	(✓) YES ( ) NO
	Apply grease to exposed grease parts (control valve spools, ball-ring gear, parking brake valve, etc.)		OEM Manual	(✓) YES ( ) NO
Prime Mover	Engine Caterpillar		OEM Manual	(✓) YES ( ) NO
	CATERPILLAR MODEL 3406	S/N.:	OEM Manual	6TB 21697
		AR.No.:	OEM Manual	4W 3798
	Change engine lube oil & oil filter and check the condition of old oil. As found ;		OEM Manual	(✓) YES ( ) NO
	Check diesel tank level, top up if required.		OEM Manual	(✓) YES ( ) NO
	Check / Clean crankcase breather cap. Change if required		OEM Manual	(✓) YES ( ) NO
	Check / Clean air cleaner filter, Replace if require. (Note : Include inspect air cleaner housing)		OEM Manual	(✓) YES ( ) NO
	Check condition and inspect of the radiator and cap.		OEM Manual	(✓) YES ( ) NO
	Check for any signs of leaks on or around the engine ie; Crankshaft seal for front & rear seal , Engine oil cooler. As found;		OEM Manual	(✓) YES ( ) NO
	Check condition exhaust system for leaks, corrosion, insulation and general. As found ;		OEM Manual	(✓) YES ( ) NO
	Check condition of all engie hoses and tube. (Fuel supply,Cooling system and Lube oil system. As found;		OEM Manual	(✓) YES ( ) NO
	Drain water and sediment form diesel tank. As found ;		OEM Manual	(✓) YES ( ) NO
	Check / Clean Diesel tank level sightglass and diesel tag.		OEM Manual	(✓) YES ( ) NO
	Apply grease of fan bearing/shaft.		OEM Manual	(✓) YES ( ) NO
	Check and inspect the vibration damper and pulley. As found ;		OEM Manual	(✓) YES ( ) NO
	Change water coolant and check condition base of water coolant and record PH.		OEM Manual	(✓) YES ( ) NO
	COOLANT PARAMETERS (PH):	6 or higher	OEM Manual	PH = 7
	HOUR METER PARAMETERS:	LAST READING ____ HRS	OEM Manual	N/A HRS
	Check and retigthen the bolts of all engine base. / Inspection mouting rubber. As found ;		OEM Manual	(✓) YES ( ) NO

Chalwandhe P. / 7 Oct 25

SYSTEM	TASK			Specification	Record/Reading
	Inspect the engine fan blades that there is a break is it severely distorted or rusted. As found :.....			OEM Manual	(✓) YES ( ) NO
	Change and adjust the tension engine belts. Remark; To check belt Tension, after has engine run more than 30 minules apply 400 N (90 lbs) of force midway between the pulleys. Correctly adjusted belts with deflect 13 to 19 mm (1/2 to 3/4 inch).			OEM Manual	(✓) YES ( ) NO
	Check engine HYD starter drive gear bendix and fly wheel gear teeth condition and record. **Replace if required"			OEM Manual	(✓) YES ( ) NO Bendix Gear : 90 % Fly wheel Gear teeth : 90 %
	Check and inspect condition the Bendix of hydraulic Starter motor.			OEM Manual	(✓) YES ( ) NO
	Lubricate and check engine throttle system.			OEM Manual	(✓) YES ( ) NO
	Determine if the tachometer operates properly: Record Value of Idle & Max Speed (RPMs) Note: Too low Idle (RPMS) will cause excessive worn at winch brake			OEM Manual	
	ENGINE RPM SPECIFIC	IDLE SPEED	850-950 RPM	OEM Manual	850 RPM
		MAX SPEED	2200 RPM	OEM Manual	2200 RPM
	Confirm engine oil pressure as per Parameters below and Record Value:			OEM Manual	
	ENGINE OIL PRESSURE SPECIFIC	Minimum	Not lower then 30 PSI	OEM Manual	40 PSI
		Maximum	70 PSI	OEM Manual	60 PSI
	Confirm engine fuel pressure Parameters are correct and Record Value:			OEM Manual	
	ENGINE FUEL PRESSURE SPECIFIC** ***Note;Fuel pressure at high idle is lower than 105 kPa (15 psi)RAMETERS*	Normal	>35 PSI.	OEM Manual	(✓) YES ( ) NO
	Confirm engine temperature Parameters and Record Value:			OEM Manual	
	ENGINE WATER TEMP SPECIFIC	NORMAL	120 - 180 degrees F	OEM Manual	160 F
	Test engine SAFETY DEVICE- ensure engine kill cable shuts off FUEL supply			API RP 2D	(✓) Function ( ) False
	Test engine SAFETY DEVICE- ensure EMERGENCY KILL CABLE - shuts off AIR supply			API RP 2D	(✓) Function ( ) False
	Test engine SAFETY DEVICE- ensure ENGINE low lube oil - releases OIL PRESSURE to activate shuts off engine ****Note*** Engine oil pressure low alarm at 20 PSI*			Company Spec/Standard	( ) Function ( ) False
	Test engine SAFETY DEVICE- ensure HIGH TEMP - releases OIL PRESSURE to activate shuts off engine			Company Spec/Standard	(✓) Function ( ) False
	Check the general conditionand functioning of turbocharger. Note;			OEM Manual	( ) Leak (✓) Not Leak
	Change fuel filter and inspect the primary hand pump.			OEM Manual	(✓) YES ( ) NO
	Check water temperator regulator.(Thermostat). Change if require refer from cooling temperature.			OEM Manual	(✓) YES ( ) NO
	Check general condition the Governor and control linkage. (Inspect the throtle linkage)			OEM Manual	(✓) YES ( ) NO
	Check or adjust the engine valve lash and bridge valve. (Intake vale = 0.015", Exhaust valve = 0.030")			OEM Manual	(✓) YES ( ) NO
	Check condition wear of pump drive spline and record ***Note; Remaining 70% of Original Spline Surface must be replace.*			Company Spec/Standard	80 % Remaining
	Check condition wear of adaptor Coulping spline shaft and record ***Note; Remaining 70% of Original adaptor Coulping spline shaft Surface must be replace.*			Company Spec/Standard	80 % Remaining
	Check condition wear of Coulping spline and record. Re-tigthen of all lock bolts. ***Note; Remaining 70% of Original adaptor Coulping spline shaft Surface must be replace.*			Company Spec/Standard	80 % Remaining
Hydraulic Start System (Apply for C2-Remote P/F Only)	Check pressure system at the pressure gauge which should reach 3,000 PSI as standard when the system is FULLY charged. Record Value. (As the system cools down, the pressure should drop slightly and finally stabilised.)			OEM Manual	(✓) YES ( ) NO
	Visually inspect all hydraulic connections and hoses for leaks and retighten if necessary. (Caution: This should NOT be done if the system is under pressure.) 1. Slowly release system pressure by loosening the bleed screw on top of the hand pump. 2. Ensure no pressure remains, retighten the suspected leak fitting or replace the damaged hose or component. 3. Retighten the bleed screw on the hand pump. 4. Pump the system up to 2200 - 2600 PSI 5. Inspect that the leak was eliminated.			OEM Manual	(✓) YES ( ) NO
	Function check Accumulator Pre-charge. (Caution: This should NOT be done if the system is under pressure.) 1. Shut the engine off, release system pressure via the bleed screw on top of the hand pump 2. Retighten bleed screw and actuate the hand pump. The pressure will rapidly increase and then stabilised. This pressure is related to accumulator gas pre-charge pressure. 4. If the pressure rapidly increase to 3000 PSI, it indicates that the accumulator has lost its gas charge. 5. Troubleshoot as necessary			OEM Manual	(✓) YES ( ) NO
	Check function rechaging system by function boom down while the engine runhing. 1. The crane engine is running at 1,000-1500 RPM. 2. Slowly control lever boom function down for charging pressure to accumulator. 3. This pressure should read on prssure gauge between 2200 - 2600 PSI depending on the recharge ratio 80% std. (90% optional). Record Pressure Value.			OEM Manual	2500 PSI
	Check Nitrogen pressure in Accumulator ***Note**spec @ 1,500 psi as follow schematic and if found pressure loss below 1400 PSI then prepare recharge nitrogen in system			OEM Manual	1500 PSI
	Every 36 months or 2000 engine running hours (approximately 1500 starts) replace the high pressure filter.			OEM Manual	(✓) YES ( ) NO
Hoist / Brakes	Visually check a hoist exhibits erratic operation and/or unusual noise, the hoist must be taken out of service until it is inspected and serviced by a qualified technician. Continued operation of a hoist with a defect in a critical component may lead to loss of load control, property damage, serious injury or death.			OEM Manual	(✓) YES ( ) NO
	Visual exteriors of hoist, frames, drums and flanges for damage, leaks, cracks and wear and repair/replace as required to maintain the structural integrity of the hoist.			OEM Manual	(✓) YES ( ) NO
	Check all hoist mounting pins, bolts or other fasteners and replace or tighten as necessary.			OEM Manual	(✓) YES ( ) NO
	Lubricant level must be maintained between the minimum and maximum levels; midway up sight glass or at bottom of level plug port as equipped and check/clean plug vent. Use only the recommended type of lubricant.			OEM Manual	(✓) YES ( ) NO
	Inspect Brake Valve Opening Pressure test V/V 1-1/4" PD Series : no lower than 550 PSI V/V 1-1/2" CH Series : no lower than 575 PSI	Main		Braden Bulletin 527-Dec,1996	650 PSI
		Aux			550 PSI
	Inspect Brake cylinder opening pressure test. CH/PD Series : 400-450 PSI.	Main		Industry Standard	450 PSI
		Aux			400 PSI
	Measure differancian of static and dynamic brake. CH/PD Series : 150-250 PSI.	Main		Industry Standard	200 PSI
		Aux			150 PSI
	~~Check for external oil leaks and repair as necessary. This is extremely important due to the accelerated wear that will result from insufficient lubricating oil in the hoist.~~			OEM Manual	(✓) YES ( ) NO
	RECORD BOOM CYLINDER INFORMATION :	Boom cylinder Diameter:		OEM Manual	DIA: 12 Inch
		CY Number:		OEM Manual	L= 74925 R= 7092-6
		Serial Number:		OEM Manual	L= 6844 R= 6845
	RECORD MAIN HOIST INFORMATION :	Manufacturer:		OEM Manual	Braden
		Model:		OEM Manual	CH175A 23040-02-1
		Serial Number:		OEM Manual	0500467

[redacted] / 7 Oct 25

SYSTEM	TASK			Specification	Record/Reading
	Check MAIN HOIST for proper operation and good condition			API RP 2D	(✓) YES ( ) NO
	Brake test & record pressure of MAIN HOIST.			OEM Manual	(✓) YES ( ) NO As found Good
	Change main hoist gear oil and inspect for small particles in the old oil. ** Refer to Onsite Gear Oil Sample Procedure ** ** Replace and send oil sample to SKL if abnormal ** ** Take photo of Oil Sampling for Reference**			OEM Manual	(✓) YES ( ) NO As found Good
	RECORD AUXILIARY HOIST INFORMATION :		Manufacturer:	OEM Manual	Braden
			Model:	OEM Manual	PD 12C290bb-00-1
			Serial Number:	OEM Manual	0450921
	Check AUXILIARY HOIST for proper operation and good condition			API RP 2D	(✓) YES ( ) NO
	Brake test & record pressure of AUXILIARY HOIST			API RP 2D	(✓) YES ( ) NO
	Change Aux. hoist gear oil and inspect for small particles in the old oil. ** Refer to Onsite Gear Oil Sample Procedure ** ** Replace and send oil sample to SKL if abnormal ** ** Take photo of Oil Sampling for Reference** Please record if any abnormal condition. Note.....			OEM Manual	(✓) SEND SKL LAB ( ) NOT SEND SKL LAB
	Check pressre relief Valve: Determine hoistes' relief valve pressure gauge is working and giving accurate measurement by notice whether pressure gauge is vibrating or not. If not, set relief valve pressure in accordance with the schematic and parameters below. Record all readings.			OEM Manual	(✓) YES ( ) NO
	BOOM RELIEF VALVE TEST	Relief Specific:	3,000 PSI	OEM Manual	3000 PSI
	MAIN HOIST RELIEF VALVE TEST	Relief Specific:	2,575 PSI	OEM Manual	2500 PSI
	AUX HOIST RELIEF VALVE TEST	Relief Specific:	2,800 PSI	OEM Manual	2800 PSI
	SWING RELIEF VALVE TEST	Relief Specific:	1,500 PSI	OEM Manual	1500 PSI
	Measure Pressure of hoist motor case drains and Record Value Reference Bulletin: BRADEN Inspection, Testing, Preventive Maintenance and Special Operating Instructions For Planetary Hoists PB-308 latest edition for further details.			OEM Manual	
	MAIN HOIST CASE DRAIN for Gear Motor (Down Mode).	PRESSURE	< 100 psi	Company Spec/Standard	10 PSI
	AUX. HOIST CASE DRAIN for Gear Motor (Down Mode).	PRESSURE	< 100 psi	Company Spec/Standard	8 PSI
Hydraulic System	Check hydraulic tank oil level. Oil should be visible in the sight glass. Top up as required (3/4 Tank Minimum)			OEM Manual	(✓) YES ( ) NO
	Check hydraulic oil condition. (Check if running hours are more than 100 hours from last oil change or during Annual inspection) ** Refer to Onsite Hydraulic Oil Sample Procedure ** ** Replace and send oil sample to SKL if abnormal ** ** Take photo of Oil Sampling for Reference**		Rando HD-68	Company Spec/Standard	( ) SEND SKL LAB (✓) NOT SEND SKL LAB
	Inspect hydraulic tank and strainer filter. Change hydraulic oil, If required with lab confirmation.			Company Spec/Standard	(✓) YES ( ) NO
	Drain off 1 liter of oil to remove condensed water. If water is present, drain until water is removed and top up with clean oil			Industry Standard	(✓) YES ( ) NO
	Check for any hydraulic leaks			Industry Standard	(✓) YES ( ) NO
	Check the hydraulic hose, piping and tubing for mechanical damage, corrosion, splits, blisters, cracking or excessive abrasion on the outer surface			API RP 2D	(✓) YES ( ) NO
	Check that all hydraulic hose connections are sound and that all mounting and pivoting connections are secure.			Industry Standard	(✓) YES ( ) NO
	Lubricate hydraulic swivel in pedestal and insure tie down restrains are in place and preventing the swivel from rotating with the crane structure.			OEM Manual	(✓) YES ( ) NO
	Ensure the filler breather on tank is not covered or clogged			Industry Standard	(✓) YES ( ) NO
	Visually inspect for missing or loose pins, pin keepers, bolts, nuts, fasteners on all pumps, motors and valves			API RP 2D	(✓) YES ( ) NO
	* Re-tighten the stud bolt of hydraulic main pump and marking the nut for checking to prevent loosening. Note : Torqe spec model P76, P75, PGP/PGM350 ,PGP/PGM330 = 200 ft-lbs. , for model PGP/PGM315 = 140 ft-lbs. and PGP/PGM365 = 450 ft-lbs.			The Commercial Intertech manual	(✓) YES ( ) NO
	Check the filter bypass indicator, while engine is running			OEM Manual	(✓) YES ( ) NO
	With engine running (after all other items pass inspection), check the system for leaks around fittings, hoses, valves and reservoirs			Industry Standard	(✓) YES ( ) NO
	With engine running, check the source of any unusual noise or vibration that may cause or indicate equipment damage or wear			Industry Standard	(✓) YES ( ) NO
	Ensure all hoses are properly rated for the system, see "Parameters" for each system for details.			Industry Standard	(✓) YES ( ) NO
	Record hydraulic oil operating temperture. Note: Hydraulic fluid overheating temperature is over 180 F degrees or 82 C, degrees (reservoir temperature)			Industry Standard	130 Degree F
	Determine if hydraulic return pressure gauge is working and giving accurate measurements. Record readings				
	RECORD HYDRAULIC RETURN PRESSURE PARAMETERS:		60 PSI "maximum"	OEM Manual	10 PSI
	Check and inspect the hydraulic return filters and seals. Change filter.			OEM Manual	(✓) YES ( ) NO
	Function Testing and record pressures with engine at :		2,200 RPM	API RP 2D	
	BOOM FUNCTION TEST (Need Crane Mech to verify each platform)			OEM Manual	
	Boom Angle : 60 Degree (Recommend or as applicable) — UP	Cracking pressure	RECORD	OEM Manual	800 PSI
		Full Speed Pressure	RECORD	OEM Manual	900 PSI
	DOWN	Cracking pressure	RECORD	OEM Manual	1000 PSI
		Full Speed Pressure	RECORD	OEM Manual	1400 PSI
	MAIN HOIST FUNCTION TEST (Need Crane Mech to verify each platform)			OEM Manual	
	Boom Angle : 60 Degree (Recommend or as applicable) — UP	Cracking pressure	RECORD	OEM Manual	100 PSI
		Full Speed Pressure	RECORD	OEM Manual	700 PSI
	DOWN	Cracking pressure	RECORD	OEM Manual	600 PSI
		Full Speed Pressure	RECORD	OEM Manual	1500 PSI
	AUX HOIST FUNCTION TEST (Need Crane Mech to verify each platform)			OEM Manual	
	Boom Angle : 60 Degree (Recommend or as applicable) — UP	Cracking pressure	RECORD	OEM Manual	550 PSI
		Full Speed Pressure	RECORD	OEM Manual	900 PSI
	DOWN	Cracking pressure	RECORD	OEM Manual	1000 PSI
		Full Speed Pressure	RECORD	OEM Manual	1650 PSI
	SWING FUNCTION TEST (Need Crane Mech to verify each platform)			OEM Manual	

[redacted] / 9 Oct 25

SYSTEM	TASK				Specification	Record/Reading
	Boom Angle : 60 Degree (Recommend or as applicable)	LEFT	Cracking pressure	RECORD	OEM Manual	200 PSI
			Full Speed Pressure	RECORD	OEM Manual	800 PSI
		RIGHT	Cracking pressure	RECORD	OEM Manual	900 PSI
			Full Speed Pressure	RECORD	OEM Manual	600 PSI
Electrical system, Crane Boom Lighting and red obstruction light	Check the electrical junction boxes, wires and connections for deterioration, desiccant bags, (replace as required)				Industry Standard	(✓) YES ( ) NO
	Check the condition of the grounding and lighting protection system.				Company Spec/Standard	(✓) YES ( ) NO
	Visually inspect boom floodlight and light guards for loose, missing, corroded				Company Spec/Standard	(✓) YES ( ) NO
	Check condition pipe support , U-bolt ,nuts of boom floodlight and Electric slipring for loose , missing , corroded				Company Spec/Standard	(✓) YES ( ) NO
	Check Electric slipring/swivel for 360° continuous rotation				OEM Munnal	(✓) YES ( ) NO
	Check Water ingress, condensation in electric slipring, red obstruction light and boom floodlight				OEM Munnal	(✓) YES ( ) NO
	Check feely movement and lubricate of boom floodlight				OEM Munnal	(✓) YES ( ) NO
	With generator in operation, intergize all lights to unsure proper function.				API RP 2D	(✓) YES ( ) NO
	Check condition of crane boom lighting and safety net is secured with strong point. * **Safety net should be replace 24 months after installation (2 year)***			Last installation date _____	Company Spec/Standard	(✓) YES ( ) NO
	Check function of crane sound signal				Company Spec/Standard	( ) YES ( ) NO (✓) N/A
	Check function of crane boom lighting at boom upper section				Company Spec/Standard	( ) YES ( ) NO (✓) N/A
	Check function of crane boom lighting at boom lower section				Company Spec/Standard	( ) YES ( ) NO (✓) N/A
	Check function of crane boom lighting at winch skid				Company Spec/Standard	( ) YES ( ) NO (✓) N/A
	Check function of crane boom lighting at crane cabin				Company Spec/Standard	( ) YES ( ) NO (✓) N/A
	Check function becon light at boom tip				Company Spec/Standard	( ) YES ( ) NO (✓) N/A
	Inspection wire rope guide & Roller assembly				Company Spec/Standard	(✓) YES ( ) NO
	Visually inspect red obstruction light pipe support, u-bolts, nuts connection to hand rail for loose, missing, corroded				Company Spec/Standard	(✓) YES ( ) NO
	Visually inspect safety sling attached to the red obsruction light and its base for loose, missing, corroded				Company Spec/Standard	(✓) YES ( ) NO
	Visually inspect red obstruction light function. The light is designed to turn on all the time.				Company Spec/Standard	(✓) YES ( ) NO
Operator Control Station	Check general condition of control panel, bolts, paint security, etc.				API RP 2D	(✓) YES ( ) NO
	Determine if there is a serviceable fire extinguisher in the vicinity of the crane				Company Spec/Standard	(✓) YES ( ) NO
	Determine if correct load chart is in use and easily visible for operator				API RP 2D	(✓) YES ( ) NO
	Determine if charts, indicators and hand signal chart are in the cabling and firmly attached				API RP 2D	(✓) YES ( ) NO
	Determine if angle/radius indicator plate is easily visible to operator and is moving freely.				API RP 2D	(✓) YES ( ) NO
	Check condition of control levers and determine if they "dead-man" back to the neutral position.				API RP 2D	(✓) YES ( ) NO
	Check condition of pressure gauges.				API RP 2D	(✓) YES ( ) NO
	Check proper control labels are firmly installed, completely legible and properly labeled				API RP 2D	(✓) YES ( ) NO
	Check controls for freedom-of-movement				API RP 2D	(✓) YES ( ) NO
	Check condition , Leak, freely moement of Dynamic swing break system *** Note; If HYD Oil loose in CYD reservoir must be refill*				OEM Manual	(✓) YES ( ) NO
	Check condition , Leak, freely moement of Accelerate System *** Note; If HYD Oil loose in CYD reservoir must be refill*				OEM Manual	(✓) YES ( ) NO
	Check all safety glass and rubber seal for proper condition				API RP 2D	(✓) YES ( ) NO ( ) N/A
	Function Test Horn. Note;.....				Industry Standard	(✓) YES ( ) NO ( ) N/A
	Ensure PRE/POST Check List and Pocket Manual in the cabin. Note;.....				Company Standard	(✓) YES ( ) NO ( ) N/A
Load Indicator System	Visual check on fittings and connections for leaks. Fix leak if any. Note:.....				OEM Manual	(✓) YES ( ) NO
	Should any leaks exist, stop leak and recharge system, refer to maintenance manual				OEM Manual	(✓) YES ( ) NO
	Change and flushing Load cell fluid.				OEM Manual	(✓) YES ( ) NO
	Check general condition of tubbing, hoses, pins bolts, paint, etc.				Industry Standard	(✓) YES ( ) NO
	Insure load cell is free of obstructions				OEM Manual	(✓) YES ( ) NO
	Check condition of gauge(s) face and clean glass as required.				OEM Manual	(✓) YES ( ) NO
	Check the scale's operation and weighing accuracy. (Main Hoist) Remark : Maximum variance +/- 2% Note;.....				Company Spec/Standard	(✓) YES ( ) NO ( ) N/A
	Check the scale's operation and weighing accuracy (Aux. Hoist) Remark : Maximum variance +/- 2% Note;.....				Company Spec/Standard	(✓) YES ( ) NO ( ) N/A
	Check the Internal casting fluid of weight indicator. top up if required				Industry Standard	(✓) YES ( ) NO ( ) N/A
	Insure SWL tag matches ratings on the Crane Load Chart.				OEM Manual	(✓) YES ( ) NO ( ) N/A
	Insure Boom Length, matches the Crane Load Chart				OEM Manual	(✓) YES ( ) NO ( ) N/A
	Insure Boom Angle measurements and readings match the boom angle indicator.				OEM Manual	(✓) YES ( ) NO ( ) N/A
	Insure Boom Radius measurements indicate the distance from center line of the crane to the hook				OEM Manual	(✓) YES ( ) NO ( ) N/A
	Check Main load cell gap 1/4 (0.250) inch				OEM Manual	(✓) YES ( ) NO ( ) N/A
	Check Aux load cell gap 3/8(0.380) inch (Compression Load Cell Type)				OEM Manual	(✓) YES ( ) NO ( ) N/A
Pedestal & Structure	Visually check Pedestal for chipped/cracked paint, deformation, worn parts, dents, corroded areas, cracks weld, etc.				API RP 2D	(✓) YES ( ) NO
	Check water rain drain at pedestal must be not obstuct				Industry Standard	(✓) YES ( ) NO
	Check pin and cotter pin of pedestal missing , corrosion, wear, damage and exercise pin.				Industry Standard	(✓) YES ( ) NO
	Visually check Base - Plate connection and Base hoist Structure for chipped/cracked paint, deformation, worn parts, dents, corroded areas, cracks weld, etc.				API RP 2D	(✓) YES ( ) NO
	Check A fixed such as Handrial, Walkway, Grating, stationary structure without significant movement in response to waves and currents in normal operating conditions.				API RP 2C	(✓) YES ( ) NO
	Visually check and lubricate maintenance Jib. ***Note*** If on pedestal crane				OEM Manual	(✓) YES ( ) NO ( ) N/A
	Check maintenance jib is secure firmly. ***Note*** If on pedestal crane				OEM Manual	(✓) YES ( ) NO ( ) N/A
Box Boom & Luffing CYD	Check and Verify entire box boom and Boom CYD for loss of protective coating and corrosion. Note;.....				API RP 2D	(✓) YES ( ) NO
	Check and Verify entire box boom and Boom CYD for chipped/cracked paint, deformation, worn parts, dents, corroded areas, cracks, etc. Note;.....				API RP 2D	(✓) YES ( ) NO
	Check and Verify boom end connections, for bends, dents, corroded areas, cracked welds, and signs of mechanical damage, wear, etc. **any deviation should be reported**				API RP 2D	(✓) YES ( ) NO
	Check and Verify boom rest and wooden support to ensure it's in good condition				API RP 2D	(✓) YES ( ) NO
	Inspect pin and pin holes of Upper tank and Lower tank for excessive clearance				OEM Manual	(✓) YES ( ) NO
	BOOM CYLINDER PIN MAXIMUM TOLERANCE		0.125 Inch (3mm)		Industry Standard	As found 0.018

[redacted] / 7 Oct 25

SYSTEM	TASK	Specification	Record/Reading
	Check BOOM CYLINDERS for proper operation and good condition	API RP 2D	(✓) YES ( ) NO
	Check Boom cylinder barrels and rods for leaks, mechanical damage and corrosion	Industry Standard	(✓) YES ( ) NO
	Check and measurement boom foot pin and connection pins for clearance	Industry Standard	
	BOOM FOOT PINS & BOOM BOX CONNECTER PIN TOLERANCE — 0.125 Inch (3mm)	Industry Standard	
	Boom Foot Pin Tolerance	Industry Standard	0.018 inch
	Boom Box Connecter Pin Tolerance	Industry Standard	0.027 inch
	Check connecting bolts of box boom loose, corrosion, wear, damage	OEM Manual	(✓) YES ( ) NO
	Lubricate boom foot pins and bushings	OEM Manual	(✓) YES ( ) NO
	Lubricate boom cylinder pins, bearings and bushings	OEM Manual	(✓) YES ( ) NO
	Boom function test angle/radius to correction **Note; The cylinder(s) mechanism shall be capable of elevating the boom from a minimum of zero degrees to the maximum recommended boom angle.	API RP 2C	(✓) YES ( ) NO
	Operation functional test and verify Boom Creeping down **Note ; Test at angle 60 °	Industry Standard	(✓) YES ( ) NO As found Good
Wire Rope	Determine if parts-of-line match parts of line on the load chart in the crane cabin.	API RP 2D	(✓) YES ( ) NO
	Determine if visible portion of wire rope adequately lubricated. If not lubricate wire rope	API RP 2D	(✓) YES ( ) NO
	For each layer of wire rope on drum, check that all rope is parallel and each crossover point at hoist flanges is correct	API RP 2D	(✓) YES ( ) NO
	The top layer of rope must not be lower to the flange tips 2.5 in for Smooth drum,2 in for groove drum or 2.5 times of wire rope diameter	API RP 2C	(✓) YES ( ) NO
	Inspect wire rope for, kinking, crushing, broken wires, necking down of rope diameter, worn outside wires, corroded or broken wires at end connection, cutting or unstringing.	API RP 2D	(✓) YES ( ) NO As found Good
	NoteRunning Ropes of rotation-resistant construction used in the main or auxiliary Hoist: - Four (4) Randomly distributed broken wires within 30 rope diameter - Two (2) broken wires in one stand within 6 rope diameter	API RP2D Edition 7	(✓) YES ( ) NO As found Good
	One valley break can indicate internal rope damage requiring close inspection of this section of the rope. When one or more valley breaks are found in one lay length the rope should be retired.	API RP2D Edition 7	(✓) YES ( ) NO As found Good
	Reductions for the rope diameter, from initial wire rope dimensional measurements, in a nonworking area (an area away from the sheaves) compared to the lowest diameter of rope measured in three working areas (areas where the rope regularly goes over a sheave) of more than the following is observed: — 3/64 in. (0.047 in.) (1.2 mm) for diameters up to and including 3/4 in. (19.1 mm); — 1/16 in. (0.062 in.) (1.6 mm) for diameters of 7/8 in. to 1-1/8 in. (22.2 mm to 28.6 mm); — 3/32 in. (0.093 in.) (0.8 mm) for diameter of 1-1/4 in. to 1-1/2 in. (31.8 mm to 38.1 mm); — For rope diameters greater than 1-1/2 in., a 5 % diameter loss from baseline measurement. —Wear of one-third the original diameter of the outside individual wires.	API RP2D Edition 7	(✓) YES ( ) NO As found dimension Good
	Increase in the length of an individual rope lay is observed. This increase in lay length and accompanying reduction in diameter can be caused by failure of the core. This can occur more readily in ropes or rotation-resistant construction.	API RP2D Edition 7	(✓) YES ( ) NO As found Good
	-Inspection and Verify running and standing rope from heat effect **Note; Not more than 250°C -There is evidence of heat damage from any source (i.e. engine exhaust, flare towers, stress corrosion cracking, etc.). Heat can be generated by passing a rope over a frozen or non-turning sheave, contact with structural members of the crane, improperly grounded welding leads or lightning strikes	Industry Standard	(✓) YES ( ) NO As found Good
	With the boom at the highest possible angle and the main load block or overhaul ball at the water level, ensure there is a minimum of 5 wraps of wire-rope remaining on the drums. Note: (Thai law, requires minimum of 2 wraps)	API SPEC 2C / Thai Law	(✓) YES ( ) NO
	Reference: - Running rope safety factor not less than 6 for wire rope that are running wire, (Thai law; Wire rope nominal breaking strength x number parts of line / Design factor 6) - Standing rope safety factor not less than 3.5 for wire rope that are stay cables, (Thai law)	Thai Law	(✓) YES ( ) NO ( ) N/A
	Measure and record nominal diameter of "running ropes"main and auxiliary (particularly on drum, equalizer sheave and at sockets, clips and dead end points) *****Nominal = several measurements added together divided by Number of measurements*****	API RP 2D	(✓) YES ( ) NO
	Inspect wire rope and record dimension.	API RP 2D	
	MAIN WIRE ROPE OD: — FULL DRUM	OEM Manual	0.657 inch
	MAIN WIRE ROPE OD: — HALF DRUM	OEM Manual	0.656 inch
	MAIN WIRE ROPE OD: — WATER LEVEL	OEM Manual	0.655 inch
	AUX WIRE ROPE OD: — FULL DRUM	OEM Manual	0.650 inch
	AUX WIRE ROPE OD: — HALF DRUM	OEM Manual	0.654 inch
	AUX WIRE ROPE OD: — WATER LEVEL	OEM Manual	0.652 inch
	Slip-Cut 1 meter of all ropes at the wedge socket and re-wedge to prevent rust inside of wedge socket (at outward end of rope, not on hoist drum) Dead end tail length is never less than 6 inches, or: - Standard 6 to 8 Strand wire rope is not less than 7 times the rope diameter - Rotation Resistant Wire Rope is not less than 20 times the rope diameter	Company Spec/Standard	(✓) YES ( ) NO
	U-bolt and Fist Grip Clips: Extreme care should be exercised to assure proper orientation of U-bolt clips. The U-bolt segment shall be in contact with the wire rope dead-end. The orientation, spacing, torquing, and number of all clips shall be in accordance with the crane manufacture's specifications.	API SPEC 2C	(✓) YES ( ) NO
	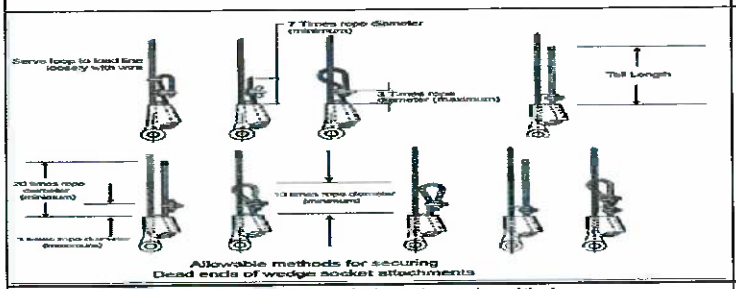 Allowable methods for securing Dead ends of wedge socket attachments	API SPEC 2C	Model ans Size wedge socket. Main hoist. Model..... Size..... Aux.Hoist. Model..... Size.....
	Verify that the wedge socket and wedge are the correct size for the rope in use and record the size	API SPEC 2C	(✓) YES ( ) NO
Sheaves & Bearings	Lubricate all sheave bearings.	API RP 2D	(✓) YES ( ) NO
	Visually inspect all sheaves and bushings for cracks, wear and deterioration	API RP 2D	(✓) YES ( ) NO As found Good
	Visually inspect wire rope track of sheave for rope imprints, wear and deterioration. If damage exist sheave should be resurfaced or replaced.	API RP 2D	(✓) YES ( ) NO As found Good

[redacted] / 9 Oct 25

SYSTEM	TASK	Specification	Record/Reading
	Pins retained by snap rings, bolt lock shafts, plates lock should be checked for missing or loose for all	API RP 2D	(✓) YES ( ) NO
	Check wirerope guards and keepers for proper location and condition.	API RP 2D	(✓) YES ( ) NO
	Determine if wire rope is jumping the sheaves, by looking for signs of damage on the sheave brim	Industry Standard	(✓) YES ( ) NO
	Sheave Rope Profile for optimum Rope life the sheave groove profile should be correctly matched to the rope diameter	Industry Standard	(✓) YES ( ) NO
	Check rope sheave should be machine grooved to adepth of not less than 1.5 times the norminal diameter of the rope	Industry Standard	(✓) YES ( ) NO
	MAIN POINT SHEAVES: Note;.....	Industry Standard	No.1 (✓) YES ( ) NO No.2 (✓) YES ( ) NO
	AUX SHEAVES: Note;.....	Industry Standard	No.1 (✓) YES ( ) NO
	IDLER SHEAVES: Note;.....	Industry Standard	AUX. (✓) YES ( ) NO Main (✓) YES ( ) NO
	Pins for bronze bushing and straight roller bearing should have a running clearnace of .031 inch/ sheave of end play and should be adjusted accordingly.(count from left)	Industry Standard	(✓) YES ( ) NO
	MAIN POINT SHEAVES:	Industry Standard	Sheave No.1.....18..... inch Sheave No.2.....18..... inch
	AUX SHEAVES:	Industry Standard	Sheave No.1.....18..... inch
	IDLER SHEAVES:	Industry Standard	Sheave AUX.....18..... inch. Sheave Main.....18..... inch.
	Ensure the sheaves are aligned and the fleet angle is correct **Remark ; Wire rope User's Manual allows 2 degree on grooved winch drum, Smooth Drum shuold be not more than 1-1/2 degree	API RP 2D	(✓) YES ( ) NO
	Determine if wire rope size and sheave sizes/grooves are compatible and record size. Sheave pitch diameter (D) to nominal wire rope diameter (d) ratio (D/d) shall not be less than 18:1	API SPEC 2C	(✓) YES ( ) NO
	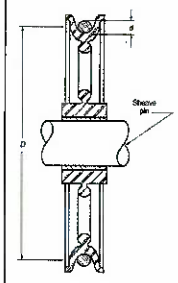 MAIN POINT SHEAVES: SHEAVE D / WIRE ROPE d = >18	API SPEC 2C	18 inch (D) 0.625 inch (d) 28.8 (Ratio D/d)
	AUX SHEAVES: SHEAVE D / WIRE ROPE d = >18	API SPEC 2C	14 inch (D) 0.625 inch (d) 22.4 (Ratio D/d)
	IDLER SHEAVES: SHEAVE D / WIRE ROPE d = > 18 (If applicable)	API SPEC 2C	18 inch (D) 0.625 inch (d) 28.8 (Ratio D/d)
	MAIN BLOCK SHEAVES: SHEAVE D / WIRE ROPE d = > 16	API SPEC 2C	16 inch (D) 0.625 inch (d) 25.5 (Ratio D/d)
Load Block	Load Block: Check the load block for cleanliness, binding sheaves, damaged or worn sheaves, worn or distorted sheave pins, broken bolts, and worn cheek weights. Note ;.....	Industry Standard	( ) YES ( ) NO As found.....Good.....
	Hook: Check the hook damage, excessive wear to the hook safety latch, hook swivel trunnions, thrust collar, securing, damage or missing lubrication fittings, proper lubrication, cracks and gouges, and if visibly bent or twisted or has been exposed to welding or arching. Note ;.....	Industry Standard	(✓) YES ( ) NO As found.....Good.....
	Hook: Tip has been bent more than 10 degree out of plane from the hook body	Industry Standard/API RP2D7	(✓) YES ( ) NO As found.....Good.....
	Inspect the Pins for bronze bushing and straight roller bearing should have a running clearnace of .031 inch/ sheave of end play and should be adjusted accordingly	Industry Standard	(✓) YES ( ) NO
	Inspect Hook or shackle to swivel case clearance is set at .031 to .062 inch, Clearance exceeding .12 to .18 (ONLY CROSBY BRAND)	OEM Crosby	(✓) YES ( ) NO
	OEM STANDARD RECOMMEND that Crane block removal from service untill replaced and repair following below	OEM STANDARD	
	- Elongated center pin and hook trunnion holes exceeding 5% of Original diameter	OEM STANDARD	(✓) YES ( ) NO As found.....Good.....
	-Material loss due to wear exceeding 10% of original section	OEM STANDARD	(✓) YES ( ) NO As found.....Good.....
	-Sheave wire rop groove diameter smaller than 2.5%	OEM STANDARD	(✓) YES ( ) NO As found.....Good.....
	Loosened tie bolts nuts, center pin round nuts, check weight cap screws and hook nut cap screws. Tie bolt nuts to be torqued to 35-40 ft.Lbs and restaked, all other fasteners wrench tight	OEM STANDARD	(✓) YES ( ) NO
	Throat opening - any distortion causeing an increase in throat opening of 5% not ot exceed 1/4 in. (6 mm.)(or as recommended by the manufacturer)	ASME B30.10	(✓) YES ( ) NO
	Inspect rope track worn in sheave groove, sheave must be resurface or replace	API RP 2D	( ) YES ( ) NO
	Ensure the load block is not using "Cast Iron" cheek weights they can not be used as per API	API SPEC 2C	(✓) YES ( ) NO As found.....Good.....
	Determine if all hooks are equipped with properly operating safety latches and check for proper functioning	API RP 2D	(✓) YES ( ) NO
	Lubricate sheave bearings and swivels	OEM Manual	(✓) YES ( ) NO
	Re-thighten nut firmly to point at which trunion will just rotate, the Re-tighten set-screw in nut and thread condition as in the picture below,	Industry Standard	(✓) YES ( ) NO
	Last NDE inspection record	Industry Standard	Last inspect date_____
	RECORD LOAD BLOCK INFORMATION : Manufacturer:	OEM Manual	Mitsui
	Model:	OEM Manual	MBRS DIB 25
	Serial Number:	OEM Manual	0744827

[redacted] / 9 Oct 2025.

SYSTEM	TASK	Specification	Record/Reading
	Record Load block measurements and details for future comparison with historical data	Industry Standard	(✓) YES ( ) NO
	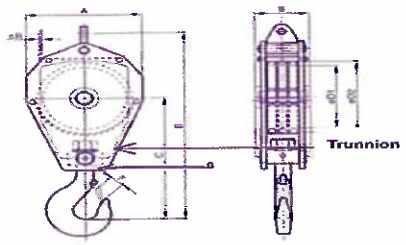 A - Block OD	Industry Standard	19.9 mm/ inch
	B - Block length	Industry Standard	14 mm/ inch
	C - Center of Pin to hook Saddle	Industry Standard	35 mm/ inch
	D1 - Sheave Diameter	Industry Standard	16 mm/ inch
	E - Block Width	Industry Standard	34 mm/ inch
	F - Throat Opening	Industry Standard	5 mm/ inch
	G - Trunnion	Industry Standard	0.050 mm/ inch
Auxiliary Ball	Inspect Auxiliary ball for cleanliness, binding swivel, work pad-eye hole. Inspect the hook damage, excessive wear to the hook safety latch, Bent connector plates,Severe corrosion pitting, hook swivel trunnions, thrust collar, securing, damage or missing lubrication fittings,Loose, missing or damaged retaining nuts, cotter pins or swivel set screws ,Missing or illegible rating and warning tags, proper lubrication, cracks and gouges, and if visibly bent or twisted or has been exposed to welding or arching.	Industry Standard	(✓) YES ( ) NO
	Hook: Tip has been bent more than 10 degree out of plane from the hook body	Industry Standard/API RP2D7	(✓) YES ( ) NO
	OEM STANDARD recommend that Crane overhaul ball removal from service untill replaced and repair following below	OEM STANDARD	
	- Elongated ball pin holes, hook latch pin holes and swivel eye exceeding 5% of original diameter,	OEM STANDARD	(✓) YES ( ) NO As found Good
	-Swivel end play gap exceeding .08". Excessive end play indicates damaged internal set screw	OEM STANDARD	(✓) YES ( ) NO As found Good
	-Material loss due to wear exceeding 10% of original section	OEM STANDARD	(✓) YES ( ) NO As found Good
	Throat opening - any distortion causeing an increase in throat opening of 5% not ot exceed 1/4 in. (6 mm.)(or as recommended by the manufacturer)	ASME B30.10	(✓) YES ( ) NO
	All hooks that lift personnel are to have a positive locking safety latch **locking Pin to be used while lifting personnel**	API RP 2D	(✓) YES ( ) NO
	*** Temperature Effected : When hooks are to be used at temperature above 400° F. (204°C) or below -40°F (-40°C), the hook manufacturer or a qualified person should be consulted *** Chemically Active Environment : The strength of hooks can be affected by chemically active environments, such as caustic or acid substances or fumes. The hook manufacturer or qualified person should be consulted before hooks are used in chemically active environment	ASME B30.10	
	Verify to ensure nut firmly at which trunion rotate. Identify to set-screw in nut/ swivel/ counter pin and thread condition.	Industry Standard	(✓) YES ( ) NO
	Last NDE inspection record	Industry Standard	Last inspect date
	RECORD AUX BALL INFORMATION : Manufacturer:	OEM Manual	McKissick
	Model:	OEM Manual	MB07T200E
	Serial Number:	OEM Manual	7361692
	Record Auxiliary Ball measurements and details for future comparison with historical data: For Model MB07T200E ONLY	Industry Standard	
	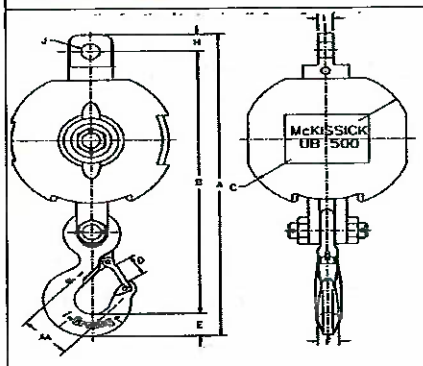 AA Dimensions 3.0 Inch	Industry Standard	3 mm/ inch
	A Dimensions 24.89 Inch	Industry Standard	24.8 mm/ inch
	B Dimensions 21.71 Inch	Industry Standard	21.7 mm/ inch
	C Dimensions 12.50 Inch	Industry Standard	12.5 mm/ inch
	D Dimensions 1.61 Inch	Industry Standard	1.6 mm/ inch
	E Dimensions 1.81 Inch	Industry Standard	1.8 mm/ inch
	F Dimensions 1.38 Inch	Industry Standard	1.38 mm/ inch
	H Dimensions 1.38 Inch	Industry Standard	1.38 mm/ inch
	I Dimensions 0.88 Inch	Industry Standard	0.88 mm/ inch
	J Dimensions 1.31 Inch	Industry Standard	1.3 mm/ inch
Safety system	Check Condition anti - two block , hanging chain ,eye bolts , fix bolts , shackle for missing , corrosion , erosion , deformation	API RP 2D	(✓) YES ( ) NO
	Check anti - two block kick out plate for freely movement	Company Spec/Standard	(✓) YES ( ) NO
	Check anti-2-block device proper function of Main winch	Company Spec/Standard	(✓) Function ( ) False
	Check anti-2-block device proper function of Aux. winch	Company Spec/Standard	(✓) Function ( ) False
	Check relation of boom radius and boom angle (lowest, middle, highest) with refrence to load chart. Recharge fluid W-15 to load indicator, if required.	API RP 2D	(✓) YES ( ) NO
	Functional test of emergency lowering system (See procedure in Emergency Load Lowering Box). Note: Keep for 1 Yr PM to sustain crane mechanic competency. Caution: Function test must be performed on top deck with max 2-foot height.	Company Spec/Standard	(✓) YES ( ) NO ( ) N/A
	Visually check emergency load lowering kit. Ensure EMERGENCY LOWERING PROCEDURE and MATERIAL LIST are in the box. - Ensure ALL items shown on the list are in the box and in good condition - SECURE THE BOX WITH A TIE WRAP.	Company Spec/Standard	(✓) YES ( ) NO ( ) N/A
Slew Mechanism	Visually check for damage and excessive wear on gear teeth	OEM Manual	(✓) YES ( ) NO
	Visually check slew gear box in the area of oil seal for any leaks	API RP 2D	(✓) YES ( ) NO
	RECORD SLEW GEAR BOX INFORMATION : Manufacturer:	OEM Manual	ESKRIDGE
	Model:	OEM Manual	ESKL 250
	Serial Number:	OEM Manual	N/A
	CHECK and RE-TORQUE swing drive gearbox mounting bolts at following brands: - ESKRIDGE, Model: 250 = 150 FT-LBS	API RP 2D	(✓) Yes ( ) No
	Check swing gearbox oil level/condition, top up if required	OEM Manual	(✓) YES ( ) NO

[redacted] / 9 Oct 25

SYSTEM	TASK		Specification	Record/Reading
	Monitor slew gearbox oil condition by visually examine for burnt smell, metal particles, and/or other contaminants, record and change if found.	Meropa 220	OEM Manual	(✓) CHANGE OIL ( ) NOT CHANGE OIL
	Change slew gear box oil		OEM Manual	(✓) CHANGE OIL ( ) NOT CHANGE OIL
	Grease all pivot points of slew ring (bearing)		OEM Manual	(✓) YES ( ) NO
	Grease open gears (pinion)		OEM Manual	(✓) YES ( ) NO
	Rotate crane 360 degree and check smoothness of operation		OEM Manual	(✓) YES ( ) NO
	Check swing drive static parking brake for proper operation Caution: DO NOT stop the swing of the crane with this static brake (parking brake)		OEM Manual	(✓) YES ( ) NO
	Check swing drive dynamic parking brake for proper operation		OEM Manual	(✓) YES ( ) NO
	Check swing lock mechanism condition; corrosion, dent, loos all part worn and wear		OEM Manual	(✓) YES ( ) NO As found condition Good
	Check swing lock mechanism freely lock and unlock for function. **Check and inspect for hydraulic for leaks on actuator model.**		OEM Manual	(✓) YES ( ) NO As found condition Good
	Check condition of slew ring bolts e.g. Bolt grade and washers. Caution: Use only hardened flat washers under head of bolt. Do not use lock washers, or regular flat washers.		Industry Standard	(✓) YES ( ) NO As found condition Good
	Monitor ball-ring grease sample. If found wear and tear particles, take sample and send to lab. **Wear assessment by grease sample analysis—wear may be monitored by periodic grease sample analysis as describe in this section. Grease samples should be collected every twelve months as a minimum and the results of the analysis recorded; this period should be shortened if obvious metal or contaminants are present.		API PR 2D	(✓) SEND TO LAB ( ) NOT SEND TO LAB As found Good
	Verify crane condition and load test as separate procedure.		API 2C	(✓) YES ( ) NO Specific test load Good lbs.
	Verify crane condition and load test as separate procedure. " Record crane load test in load test form."		Company Standard	(✓) YES ( ) NO

Table 1—Static/Onboard Test Load and Radius

Static/Onboard Rated Load at a Specific Radius lb (kg)	Test Loads In Excess of Static/Onboard Rated Load at a Specific Radius
≤ 40,000 (18,144)	25 %
> 40,000 ≤ 100,000 (>18,144 ≤ 45,356)	10,000 lb (4536 kg)
> 100,000 (45,356)	10 %

Risk Level Definitions: The following 3 levels indicate the impact the noted deficiency poses to the operation or structural integrity of the equipment:

Level 1 = Incidental	Level #2 = Restricted Operation	Level #3 =Out of Service
Minor deficiency that is recommended to be promptly addressed, but poses no safety and/or environmental risk. The crane can still be operated at full duty.	Deficiency identified that has the potential to limit, de-rate or damage the crane, its surroundings and/or the environment. The duty and locked/ tagged out until the crane's duty and operation should be de-rated or service restricted.	The crane should be removed from duty and locked/ tagged out until the deficiency is rectified.

System:	Risk Level:	Component: / Location:	In Accordance with: / Date Originated:
Description:	Need to change Hyd. Hose – 20#300" Run winch motor to Dump Valve.		
Recommended Action:			
Recommended urgency timeframe for corrective action:	Next PM.	Completed Date:	Completed By:

System:	Risk Level:	Component: / Location:	In Accordance with: / Date Originated:
Description:	Exhaust Muffler Damaged. Need to Changing		
Recommended Action:			
Recommended urgency timeframe for corrective action:	Next PM.	Completed Date:	Completed By:

System:	Risk Level:	Component: / Location:	In Accordance with: / Date Originated:
Description:	Main load indicator blurred vision.		
Recommended Action:			
Recommended urgency timeframe for corrective action:	Next PM.	Completed Date:	Completed By:

System:	Risk Level:	Component: / Location:	In Accordance with: / Date Originated:
Description:			
Recommended Action:			
Recommended urgency timeframe for corrective action:		Completed Date:	Completed By:

System:	Risk Level:	Component: / Location:	In Accordance with: / Date Originated:
Description:			
Recommended Action:			

[redacted] / 4 Oct 23

SYSTEM	TASK			Specification		Record/Reading
Recommended urgency timeframe for corrective action:			Completed Date:		Completed By:	

System:	Risk Level:	Component:		In Accordance with:	
		Location:		Date Originated:	
Description:					
Recommended Action:					
Recommended urgency timeframe for corrective action:			Completed Date:		Completed By:

Done by.

[redacted]

6 Oct 2025.

CRANE Mfg. : Nautilus
MODEL: 180B1-80 (MS)
SERIAL NUMBER : Crane Specific

LOCATION: NJWR

DATA BASE - PM JOB TASK CARD 1Y PM.
WO:1250959

Crew Size:
Estimated Hours:

SYSTEM	TASK		Specification	Record/Reading
Safety	Perform Job Safety Analysis (JSA)		Company Spec/Standard	(✓) YES ( ) NO
	Obtain "COMPANY" PERMIT TO WORK		Company Spec/Standard	(✓) YES ( ) NO
	Perform Tool Box Talk		Company Spec/Standard	(✓) YES ( ) NO
	BEFORE/AFTER JOB EXECUTION: Ensure to comply with isolation procedure (LOCK OUT/TAG OUT, WARNING SIGNS and BARRIERS).		Company Spec/Standard	(✓) YES ( ) NO
Required Tools	Insure proper tools are available at the job site		Company Spec/Standard	(✓) YES ( ) NO
	Tool bag		Company Spec/Standard	(✓) YES ( ) NO
	Tool box		Company Spec/Standard	(✓) YES ( ) NO
	Tool Container		Company Spec/Standard	(✓) YES ( ) NO
	MPI equipment and operator		Company Spec/Standard	(✓) YES ( ) NO
	Check safety harness Software and Hardware should be good condition before use		Company Spec/Standard	(✓) YES ( ) NO
	Check Rescue Equipment ready to use onsite		Company Spec/Standard	(✓) YES ( ) NO
	Portable Scaffolding and Crew if require		Company Spec/Standard	(✓) YES ( ) NO
Lubricants	Insure proper lubricants and consumables are available at the job site.		Company Spec/Standard	(✓) YES ( ) NO
	Hydraulic System - Hydraulic Oil	Rando HD-68	OEM Manual	(✓) YES ( ) NO
	Slew Gearbox - Gear Oil	Meropa 220	OEM Manual	(✓) YES ( ) NO
	Auxiliary Hoist - Gear Oil	Meropa 220	OEM Manual	(✓) YES ( ) NO
	Main Hoist - Gear Oil	Meropa 220	OEM Manual	(✓) YES ( ) NO
	Grease Points - Lithium Based **IT MUST NOT INCLUDE MOLYBDENUM DISULPHIDE**	MULTIFAK EP#2	OEM Manual	(✓) YES ( ) NO
	Open Gear Teeth - Open Gear Lube highly water resistant and of an adhesive nature.	OMEGA 73	OEM Manual	( ) YES (✓) NO
	Pneumatic Lubricator	SAE Grade 10	OEM Manual	( ) YES (✓) NO
	Wire rope Lubricant Company preferred grade	Birlube 70	OEM Manual	(✓) YES ( ) NO
	Engine Oil - SAE Grade 15W-40 (Delo Gold)	15W-40	OEM Manual	(✓) YES ( ) NO
	Safe Load Indicator fluid	W-15	OEM Manual	(✓) YES ( ) NO
	Engine Radiator - Should have radiator preservatives additives	Cat® SCA	OEM Manual	(✓) YES ( ) NO
Consumables	Spray Cold Galvanize		Company Spec/Standard	( ) YES ( ) NO
	Denso Tape		Company Spec/Standard	( ) YES ( ) NO
	WD-40		Company Spec/Standard	( ) YES ( ) NO
History Review	Before starting work, tasks preparation at least 1 day prior to starting work: 1. Review history PM/ CM from Roving Team, 2. Review last PM/ CM/ PMI from Crane Mech, 3. List out all punch list and prepare parts, 4. Review last Certificate task performed		API RP 2D	(✓) YES ( ) NO
	Require to update part history from Crane Mech on following main compenents to ensure the right parts are prepared: - Aux/ Main/ Boom Cylinder, Engine, Swing Gearbox, etc. Reference: Crane OEM information of each part need to be recorded - Manufacturer & Contact info - Model & serial number - Installation date		Company Spec/Standard	(✓) YES ( ) NO
	Review history data from Certificates and incorporate into current PM: - Pull Test Certificates (ongoing update, 4 yr. history). - Load Test Certificates (ongoing update, 4 yr. history). - Wire Rope Certifications (running rope and standing rope) (life of rope). - Hoist Certifications for hoist classified as "personnel handling" hoist.		API RP 2D	(✓) YES ( ) NO
	Review Last Preventative Maintenance Records (Inspection Reports) - Pre-use (Pre-Post Inspection) - 6 Monthly (API RP 2D Not Defined, Company Standard) - 1 Yearly (API RP 2D Defined Annual Inspection)		API RP 2D	(✓) YES ( ) NO
Lifting Gear Preparation	Visually Inspect (Sling, sling hooks and shackles) include Websling / Chain		Company Spec/Standard	(✓) YES ( ) NO
	Check color code / Tag & date inspection		Company Spec/Standard	(✓) YES ( ) NO
General	Determine if access route to-from crane is clean, safe, unobstructed and adequately protected against falls, tripping and slipping		Company Spec/Standard	(✓) YES ( ) NO
	Check drain lines and drip pans for deterioration		API RP 2D	(✓) YES ( ) NO
	Remove any sediment collected in the bottom of drip pans		Industry Standard	(✓) YES ( ) NO
	Check for general crane and components for loss of protective coating and corrosion		Industry Standard	(✓) YES ( ) NO
	Check for missing or loose ,corrosion, deformation pins, pin keepers, bolts, nuts, fasteners of all laders, cages and working platform		API RP 2D	(✓) YES ( ) NO
	Apply grease to exposed grease parts (control valve spools, ball-ring gear, parking brake valve, etc.)		OEM Manual	(✓) YES ( ) NO
Prime Mover	Engine Caterpillar		OEM Manual	(✓) YES ( ) NO
	CATERPILLAR MODEL 3126	S/N.:	OEM Manual	92R-62948
		AR.No.:	OEM Manual	132-4332
	Change engine lube oil & oil filter and check the condition of old oil. As found ; Changed		OEM Manual	(✓) YES ( ) NO
	Check diesel tank level, top up if required.		OEM Manual	(✓) YES ( ) NO
	Check / Clean crankcase breather cap. Change if required		OEM Manual	(✓) YES ( ) NO
	Check / Clean air cleaner filter, Replace if require. (Note : Include inspect air cleaner housing)		OEM Manual	(✓) YES ( ) NO
	Check condition and inspect of the radiator and cap.		OEM Manual	(✓) YES ( ) NO
	Check for any signs of leaks on or around the engine ie; Crankshaft seal for front & rear seal , Engine oil cooler. As found; OK		OEM Manual	(✓) YES ( ) NO
	Check condition exhaust system for leaks, corrosion, insulation and general. As found ; OK		OEM Manual	(✓) YES ( ) NO
	Check condition of all engie hoses and tube. (Fuel supply,Cooling system and Lube oil system. As found; OK		OEM Manual	(✓) YES ( ) NO
	Drain water and sediment form diesel tank. As found ; OK		OEM Manual	(✓) YES ( ) NO
	Check / Clean Diesel tank level sightglass and diesel tag.		OEM Manual	(✓) YES ( ) NO
	Apply grease of fan bearing/shaft.		OEM Manual	(✓) YES ( ) NO
	Check and inspect the vibration damper and pulley. As found ; OK		OEM Manual	(✓) YES ( ) NO
	Change water coolant and check condition base of water coolant and record PH.		OEM Manual	(✓) YES ( ) NO
	COOLANT PARAMETERS (PH):	6 or higher	OEM Manual	PH = 8
	HOUR METER PARAMETERS:	LAST READING _____ HRS	OEM Manual	_____ HRS
	Check and retigthen the bolts of all engine base. / Inspection mouting rubber. As found ; OK		OEM Manual	(✓) YES ( ) NO
	Inspect the engine fan blades that there is a break is it severely distorted or rusted. As found ; OK		OEM Manual	(✓) YES ( ) NO

[redacted] / 7 Oct 25

SYSTEM	TASK			Specification	Record/Reading
	Change and adjust the tension engine belts. Remark; To check belt Tension, after has engine run more than 30 minules apply 400 N (90 lbs) of force midway between the pulleys. Correctly adjusted belts with deflect 13 to 19 mm (1/2 to 3/4 Inch).			OEM Manual	(✓) YES ( ) NO
	Check engine HYD starter drive gear bendix and fly wheel gear teeth condition and record. **Replace if required"			OEM Manual	(✓) YES ( ) NO Bendix Gear : 85 % Fly wheel Gear teeth : 90 %
	Check and inspect condition the Bendix of hydraulic Starter motor.			OEM Manual	(✓) YES ( ) NO
	Lubricate and check engine throttle system.			OEM Manual	(✓) YES ( ) NO
	Determine if the tachometer operates properly: Record Value of Idle & Max Speed (RPMs) Note: Too low Idle (RPMS) will cause excessive worn at winch brake			OEM Manual	
	ENGINE RPM SPECIFIC	IDLE SPEED	850-950 RPM	OEM Manual	850 RPM
		MAX SPEED	2200 RPM	OEM Manual	2200 RPM
	Confirm engine oil pressure as per Parameters below and Record Value:			OEM Manual	
	ENGINE OIL PRESSURE SPECIFIC	Minimum	Not lower then 30 PSI	OEM Manual	50 PSI
		Maximum	70 PSI	OEM Manual	65 PSI
	Confirm engine fuel pressure Parameters are correct and Record Value:			OEM Manual	
	ENGINE FUEL PRESSURE SPECIFIC** **Note;Fuel pressure at high idle is lower than 105 kPa (15 psi)PARAMETERS	Normal	Green Range/ 15 PSI	OEM Manual	(✓) YES ( ) NO
	Confirm engine temperature Parameters and Record Value:			OEM Manual	
	ENGINE WATER TEMP SPECIFIC	NORMAL	120 - 180 degrees F	OEM Manual	170 F
	Test engine SAFETY DEVICE- ensure engine kill cable shuts off FUEL supply			API RP 2D	(✓) Function ( ) False
	Test engine SAFETY DEVICE- ensure EMERGENCY KILL CABLE - shuts off AIR supply			API RP 2D	(✓) Function ( ) False
	Test engine SAFETY DEVICE- ensure ENGINE low lube oil - releases OIL PRESSURE to ctivate Alarm Air System ***Note*** Engine oil pressure low alarm at 20 PSI			Company Spec/Standard	(✓) Function ( ) False
	Test engine SAFETY DEVICE- ensure HIGH TEMP - releases OIL PRESSURE to activate Alarm Air System			Company Spec/Standard	(✓) Function ( ) False
	Change water separator filter.			OEM Manual	(✓) YES ( ) NO
	Check the general conditionand functioning of turbocharger. Note;			OEM Manual	( ) Leak (✓) Not Leak
	Change fuel filter and inspect the primary hand pump.			OEM Manual	(✓) YES ( ) NO
	Check general condition the Governor and control linkage. (Inspect the throtle linkage)			OEM Manual	(✓) YES ( ) NO
	Check or adjust the engine valve lash. (Intake vale = 0.015", Exhaust valve = 0.025")			OEM Manual	(✓) YES ( ) NO
	Check or adjust the fuel timing control linkage of Unit Injector (CAT 3126) Reference: Fuel timing injection length, use the following references to obtain information: - Engine Information Plate (located at valve cover) Specific data .....mm/inch. Engine S/N..... - TMI (Technical Marketing Information - located at Manual Book) - Fuel setting and related Information Fiche			Company Spec/Standard	– mm/ inch (After Adjustment)
	Check condition wear of pump drive spline and record **Note; Remaining 70% of Original Spline Surface must be replace.			Company Spec/Standard	85 % Remaining
	Check condition wear of adaptor Coulping spline shaft and record **Note; Remaining 70% of Original adaptor Coulping spline shaft Surface must be replace.			Company Spec/Standard	80 % Remaining
	Check condition wear of Coulping spline and record. Re-tigthen of all lock bolts. **Note; Remaining 70% of Original adaptor Coulping spline shaft Surface must be replace.			Company Spec/Standard	85 % Remaining
Hydraulic Start System (Apply for C2-Remote P/F Only)	Check pressure system at the pressure gauge which should reach 3,000 PSI as standard when the system is FULLY charged. Record Value. (As the system cools down, the pressure should drop slightly and finally stabilised.)			OEM Manual	(✓) YES ( ) NO
	Visually inspect all hydraulic connections and hoses for leaks and retighten if necessary. (Caution: This should NOT be done if the system is under pressure.) 1. Slowly release system pressure by loosening the bleed screw on top of the hand pump. 2. Ensure no pressure remains, retighten the suspected leak fitting or replace the damaged hose or component. 3. Retighten the bleed screw on the hand pump. 4. Pump the system up to 2200 - 2600 PSI 5. Inspect that the leak was eliminated.			OEM Manual	(✓) YES ( ) NO
	Function check Accumulator Pre-charge. (Caution: This should NOT be done if the system is under pressure.) 1. Shut the engine off, release system pressure via the bleed screw on top of the hand pump 2. Retighten bleed screw and actuate the hand pump. The pressure will rapidly increase and then stabilised. This pressure is related to accumulator gas pre-charge pressure. 4. If the pressure rapidly increase to 3000 PSI, it indicates that the accumulator has lost its gas charge. 5. Troubleshoot as necessary			OEM Manual	(✓) YES ( ) NO
	Check function rechaging system by function boom down while the engine running. 1. The crane engine is running at 1,000-1500 RPM. 2. Slowly control lever boom function down for charging pressure to accumulator. 3. This pressure should read on prssure gauge between 2200 - 2600 PSI depending on the recharge ratio 80% std. (90% optional). Record Pressure Value.			OEM Manual	2500 PSI
	Check Nitrogen pressure in Accumulator ***Note**spec @ 1,500 psi as follow schematic and if found pressure loss below 1400 PSI then prepare recharge nitrogen in system			OEM Manual	1500 PSI
Pneumatic System	Check for noisy compressor operation, which could indicate a worn drive gear coupling, a loose pulley or excessive internal wear			OEM Manual	(✓) YES ( ) NO
	Check Air Compressor external oil supply and return lines, if applicable, for kinks, bends, or restrictionsto flow			OEM Manual	(✓) YES ( ) NO
	Inspect the Air compressor discharge port, inlet cavity and discharge line for evidence of restrictions and carboning. (If excessive buildup is noted)			OEM Manual	(✓) YES ( ) NO
	Check all hose connections are sound and all mounting and pivoting connections are secure.			OEM Manual	(✓) YES ( ) NO
	Check condition / Clean and lubricate unloading valve			OEM Manual	(✓) YES ( ) NO
	Check proper air pressure is available for the system. Record Value.			OEM Manual	
	AIR SYSTEM PARAMETERS:		MAX 60 PSI	OEM Manual	60 PSI
	Visually inspection condition of air receiver for signs of corrosion or loose of structural integrity.			Industry Standard	(✓) YES ( ) NO
	Check the hose, piping and tubing for mechanical damage, corrosion, splits, blisters, cracking or excessive abrasion on the outer surface			Industry Standard	(✓) YES ( ) NO
	Drain off air filter and reciever to remove condensed water. If water is present, drain until water is removed.			Industry Standard	(✓) YES ( ) NO
	Check proper operation of pop off valve, by manually functioning valve.			Industry Standard	(✓) YES ( ) NO
	Check proper operation of manual latch valve, by manually functioning latch.			Industry Standard	(✓) YES ( ) NO
	Check proper operation of small engine alarm horn.			Industry Standard	(✓) YES ( ) NO
Hoist / Brakes	Visually check,a hoist exhibits erratic operation and/or unusual noise, the hoist must be taken out of service until it is inspected and serviced by a qualified technician. Continued operation of a hoist with a defect in a critical component may lead to loss of load control, property damage, serious injury or death.			OEM Manual	(✓) YES ( ) NO
	Visual exteriors of hoist, frames, drums and flanges for damage, leaks, cracks and wear and repair/replace as required to maintain the structural integrity of the hoist.			OEM Manual	(✓) YES ( ) NO
	Check all hoist mounting pins, bolts or other fasteners and replace or tighten as necessary.			OEM Manual	(✓) YES ( ) NO

[redacted] / 9 Oct 25

SYSTEM	TASK			Specification	Record/Reading
	Lubricant level must be maintained between the minimum and maximum levels; midway up sight glass or at bottom of level plug port as equipped and check/clean plug vent. Use only the recommended type of lubricant.			OEM Manual	✓ YES ( ) NO
	Inspect Brake Valve Opening Pressure test V/V 1-1/4" PD Series : no lower than 550 PSI V/V 1-1/2" CH Series : no lower than 575 PSI	Main		Braden Bulletin 527-Dec,1996	600 PSI
		Aux			450 PSI
	Inspect Brake cylinder opening pressure test. CH/PD Series : 400-450 PSI.	Main		Industry Standard	450 PSI
		Aux			450 PSI
	Measure differancian of static and dynamic brake. CH/PD Series : 150-250 PSI.	Main		Industry Standard	200 PSI
		Aux			150 PSI
	Check for external oil leaks and repair as necessary. This is extremely important due to the accelerated wear that will result from insufficient lubricating oil in the hoist.			OEM Manual	✓ YES ( ) NO
	RECORD BOOM CYLINDER INFORMATION :	Boom cylinder Diameter:		OEM Manual	DIA: 12 Inch
		CY Number:		OEM Manual	L= 7892-3 R= 7889-1
		Serial Number:		OEM Manual	L= 25652 R= 25653
	RECORD MAIN HOIST INFORMATION :	Manufacturer:		OEM Manual	Braden
		Model:		OEM Manual	CH1774-23090-02-1
		Serial Number:		OEM Manual	076082
	Check MAIN HOIST for proper operation and good condition			API RP 2D	( ) YES ( ) NO
	Brake test & record pressure of MAIN HOIST.			OEM Manual	✓ YES ( ) NO As found: OK
	Change main hoist gear oil and inspect for small particles in the old oil. ** Refer to Onsite Gear Oil Sample Procedure ** ** Replace and send oil sample to SKL if abnormal ** ** Take photo of Oil Sampling for Reference**			OEM Manual	✓ YES ( ) NO As found: OK
	RECORD AUXILIARY HOIST INFORMATION :	Manufacturer:		OEM Manual	Braden
		Model:		OEM Manual	PD22C-23090-02-1
		Serial Number:		OEM Manual	076082
	Check AUXILIARY HOIST for proper operation and good condition			API RP 2D	✓ YES ( ) NO
	Brake test & record pressure of AUXILIARY HOIST			API RP 2D	✓ YES ( ) NO
	Change Aux. hoist gear oil and inspect for small particles in the old oil. ** Refer to Onsite Gear Oil Sample Procedure ** ** Replace and send oil sample to SKL if abnormal ** ** Take photo of Oil Sampling for Reference** Please record if any abnormal condition. Note.....			OEM Manual	( ) SEND SKL LAB ✓ NOT SEND SKL LAB
	Check pressre relief Valve: Determine hoistes' relief valve pressure gauge is working and giving accurate measurement by notice whether pressure gauge is vibrating or not. If not, set relief valve pressure in accordance with the schematic and parameters below. Record all readings.			OEM Manual	✓ YES ( ) NO
	BOOM RELIEF VALVE TEST	Relief Specific:	3,000 PSI	OEM Manual	3000 PSI
	MAIN HOIST RELIEF VALVE TEST	Relief Specific:	3,000 PSI	OEM Manual	3000 PSI
	AUX HOIST RELIEF VALVE TEST	Relief Specific:	2,700 PSI	OEM Manual	2700 PSI
	SWING RELIEF VALVE TEST	Relief Specific:	1,500 PSI	OEM Manual	1500 PSI
	Measure Pressure of hoist motor case drains and Record Value Reference Bulletin: BRADEN Inspection, Testing, Preventive Maintenance and Special Operating Instructions For Planetary Hoists PB-308 latest edition for further details.			OEM Manual	
	MAIN HOIST CASE DRAIN for Gear Motor (Down Mode).	PRESSURE	< 100 psi	Company Spec/Standard	10 PSI
	AUX. HOIST CASE DRAIN for Gear Motor (Down Mode).	PRESSURE	< 100 psi	Company Spec/Standard	10 PSI
Hydraulic System	Check hydraulic tank oil level. Oil should be visible in the sight glass. Top up as required (3/4 Tank Minimum)			OEM Manual	( ) YES ( ) NO
	Check hydraulic oil condition. (Check if running hours are more than 100 hours from last oil change or during Annual inspection) ** Refer to Onsite Hydraulic Oil Sample Procedure ** ** Replace and send oil sample to SKL if abnormal ** ** Take photo of Oil Sampling for Reference**		Rando HD-68	Company Spec/Standard	( ) SEND SKL LAB ✓ NOT SEND SKL LAB
Hydraulic System	Drain off 1 liter of oil to remove condensed water. If water is present, drain until water is removed and top up with clean oil			Industry Standard	✓ YES ( ) NO
	Check for any hydraulic leaks			Industry Standard	✓ YES ( ) NO
	Check the hydraulic hose, piping and tubing for mechanical damage, corrosion, splits, blisters, cracking or excessive abrasion on the outer surface			API RP 2D	✓ YES ( ) NO
	Check that all hydraulic hose connections are sound and that all mounting and pivoting connections are secure.			Industry Standard	✓ YES ( ) NO
	Lubricate hydraulic swivel in pedestal and insure tie down restrains are in place and preventing the swivel from rotating with the crane structure.			OEM Manual	✓ YES ( ) NO
	Ensure the filler breather on tank is not covered or clogged			Industry Standard	✓ YES ( ) NO
	Visually inspect for missing or loose pins, pin keepers, bolts, nuts, fasteners on all pumps, motors and valves			API RP 2D	✓ YES ( ) NO
	* Re-tighten the stud bolt of hydraulic main pump and marking the nut for checking to prevent loosening. Note : Torqe spec model P76, P75, PGP/PGM350 , PGP/PGM330 = 200 ft-lbs. , for model PGP/PGM315 = 140 ft-lbs. and PGP/PGM365 = 450 ft-lbs.			The Commercial Intertech manual	✓ YES ( ) NO
	Check the filter bypass indicator, while engine is running.			OEM Manual	✓ YES ( ) NO
	With engine running (after all other items pass inspection), check the system for leaks around fittings, hoses, valves and reservoirs			Industry Standard	✓ YES ( ) NO
	With engine running, check the source of any unusual noise or vibration that may cause or indicate equipment damage or wear			Industry Standard	✓ YES ( ) NO
	Ensure all hoses are properly rated for the system, see "Parameters" for each system for details.			Industry Standard	✓ YES ( ) NO
	Record hydraulic oil operating temperture. Note: Hydraulic fluid overheating temperature is over 180 F degrees or 82 C, degrees (reservoir temperature)			Industry Standard	130 Degree F
	Determine if hydraulic return pressure gauge is working and giving accurate measurements. Record readings				
	RECORD HYDRAULIC RETURN PRESSURE PARAMETERS:		60 PSI "maximum"	OEM Manual	20 PSI
	Check and inspect the hydraulic return filters and seals.			OEM Manual	✓ YES ( ) NO
	Function Testing and record pressures with engine at :		2,200 RPM	API RP 2D	
	BOOM FUNCTION TEST (Need Crane Mech to verify each platform)			OEM Manual	
	Boom Angle : 60 Degree (Recommend or as applicable)	UP — Cracking pressure	RECORD	OEM Manual	600 PSI
		UP — Full Speed Pressure	RECORD	OEM Manual	800 PSI
		Cracking pressure	RECORD	OEM Manual	900 PSI

[redacted] / 9 Oct 25

SYSTEM	TASK				Specification	Record/Reading
		DOWN	Full Speed Pressure	RECORD	OEM Manual	1400 PSI
	MAIN HOIST FUNCTION TEST (Need Crane Mech to verify each platform)				OEM Manual	
	Boom Angle : 60 Degree (Recommend or as applicable)	UP	Cracking pressure	RECORD	OEM Manual	180 PSI
			Full Speed Pressure	RECORD	OEM Manual	650 PSI
		DOWN	Cracking pressure	RECORD	OEM Manual	500 PSI
			Full Speed Pressure	RECORD	OEM Manual	1400 PSI
	AUX HOIST FUNCTION TEST (Need Crane Mech to verify each platform)				OEM Manual	
	Boom Angle : 60 Degree (Recommend or as applicable)	UP	Cracking pressure	RECORD	OEM Manual	100 PSI
			Full Speed Pressure	RECORD	OEM Manual	400 PSI
		DOWN	Cracking pressure	RECORD	OEM Manual	500 PSI
			Full Speed Pressure	RECORD	OEM Manual	1500 PSI
	SWING FUNCTION TEST (Need Crane Mech to verify each platform)				OEM Manual	
	Boom Angle : 60 Degree (Recommend or as applicable)	LEFT	Cracking pressure	RECORD	OEM Manual	200 PSI
			Full Speed Pressure	RECORD	OEM Manual	300 PSI
		RIGHT	Cracking pressure	RECORD	OEM Manual	200 PSI
			Full Speed Pressure	RECORD	OEM Manual	600 PSI
Electrical system, Crane Boom Lighting and red obstruction light	Check the electrical junction boxes, wires and connections for deterioration, desiccant bags, (replace as required)				Industry Standard	( ) YES ( ) NO
	Check the condition of the grounding and lighting protection system.				Company Spec/Standard	( ) YES ( ) NO
	Visually inspect boom floodlight and light guards for loose, missing, corroded				Company Spec/Standard	( ) YES ( ) NO
Can not test function Plat form AR.	Check condition pipe support , U-bolt ,nuts of boom floodlight and Electric slipring for loose , missing , corroded				Company Spec/Standard	( ) YES ( ) NO
	Check Electric slipring/swivel for 360° continuous rotation				OEM Munnal	( ) YES ( ) NO
	Check Water ingress, condensation in electric slipring, red obstruction light and boom floodlight				OEM Munnal	( ) YES ( ) NO
	Check feely movement and lubricate of boom floodlight				OEM Munnal	( ) YES ( ) NO
	With generator in operation, intergize all lights to unsure proper function.				API RP 2D	( ) YES ( ) NO
	Check condition of crane boom lighting and safety net is secured with strong point. * **Safety net should be replace 24 months after installation (2 year)*** N/A Last installation date _____				Company Spec/Standard	( ) YES ( ) NO
	Check function of crane sound signal				Company Spec/Standard	( ) YES ( ) NO ( ) N/A
	Check function of crane boom lighting at boom upper section				Company Spec/Standard	( ) YES ( ) NO ( ) N/A
	Check function of crane boom lighting at boom lower section				Company Spec/Standard	( ) YES ( ) NO ( ) N/A
	Check function of crane boom lighting at winch skid				Company Spec/Standard	( ) YES ( ) NO ( ) N/A
	Check function of crane boom lighting at crane cabin				Company Spec/Standard	( ) YES ( ) NO ( ) N/A
	Check function becon light at boom tip				Company Spec/Standard	( ) YES ( ) NO ( ) N/A
	Inspection wire rope guide & Roller assembly				Company Spec/Standard	( ) YES ( ) NO
	Visually inspect red obstruction light pipe support, u-bolts, nuts connection to hand rail for loose, missing, corroded				Company Spec/Standard	( ) YES ( ) NO
	Visually inspect safety sling attached to the red obsruction light and its base for loose, missing, corroded				Company Spec/Standard	( ) YES ( ) NO
	Visually inspect red obstruction light function. The light is designed to turn on all the time.				Company Spec/Standard	( ) YES ( ) NO
Operator Control Station	Check general condition of control panel, bolts, paint security, etc.				API RP 2D	(✓) YES ( ) NO
	Determine if there is a serviceable fire extinguisher in the vicinity of the crane				Company Spec/Standard	(✓) YES ( ) NO
	Determine if correct load chart is in use and easily visible for operator				API RP 2D	(✓) YES ( ) NO
	Determine if charts, indicators and hand signal chart are in the cabling and firmly attached				API RP 2D	(✓) YES ( ) NO
	Determine if angle/radius indicator plate is easily visible to operator and is moving freely.				API RP 2D	(✓) YES ( ) NO
	Check condition of control levers and determine if they "dead-man" back to the neutral position.				API RP 2D	(✓) YES ( ) NO
	Check condition of pressure gauges.				API RP 2D	(✓) YES ( ) NO
	Check proper control labels are firmly installed, completely legible and properly labeled				API RP 2D	(✓) YES ( ) NO
	Check controls for freedom-of-movement				API RP 2D	(✓) YES ( ) NO
	Check condition , Leak, freely moement of Dynamic swing break system *** Note; If HYD Oil loose in CYD reservoir must be refill*				OEM Manual	(✓) YES ( ) NO
	Check condition , Leak, freely moement of Accelerate System *** Note; If HYD Oil loose in CYD reservoir must be refill*				OEM Manual	(✓) YES ( ) NO
	Check all safety glass and rubber seal for proper condition				API RP 2D	(✓) YES ( ) NO ( ) N/A
	Function Test Horn. Note;.....				Industry Standard	(✓) YES ( ) NO ( ) N/A
	Ensure PRE/POST Check List and Pocket Manual in the cabin. Note;.....				Company Standard	(✓) YES ( ) NO ( ) N/A
Load Indicator System	Visual check on fittings and connections for leaks. Fix leak if any. Note;.....				OEM Manual	(✓) YES ( ) NO
	Should any leaks exist, stop leak and recharge system, refer to maintenance manual				OEM Manual	(✓) YES ( ) NO
	Change and flushing Load cell fluid.				OEM Manual	(✓) YES ( ) NO
	Check general condition of tubbing, hoses, pins bolts, paint, etc.				Industry Standard	(✓) YES ( ) NO
	Insure load cell is free of obstructions				OEM Manual	(✓) YES ( ) NO
	Check condition of gauge(s) face and clean glass as required.				OEM Manual	(✓) YES ( ) NO
	Check the scale's operation and weighing accuracy. (Main Hoist) Remark : Maximum variance +/- 2% Note;.....				Company Spec/Standard	(✓) YES ( ) NO ( ) N/A
	Check the scale's operation and weighing accuracy. (Aux. Hoist) Remark : Maximum variance +/- 2% Note;.....				Company Spec/Standard	(✓) YES ( ) NO ( ) N/A
	Check the internal casting fluid of weight indicator. top up if required				Industry Standard	(✓) YES ( ) NO ( ) N/A
	Insure SWL tag matches ratings on the Crane Load Chart.				OEM Manual	(✓) YES ( ) NO ( ) N/A
	Insure Boom Length, matches the Crane Load Chart				OEM Manual	(✓) YES ( ) NO ( ) N/A
	Insure Boom Angle measurements and readings match the boom angle indicator.				OEM Manual	(✓) YES ( ) NO ( ) N/A
	Insure Boom Radius measurements indicate the distance from center line of the crane to the hook				OEM Manual	(✓) YES ( ) NO ( ) N/A
	Check Main load cell gap 1/4 (0.250) inch				OEM Manual	(✓) YES ( ) NO ( ) N/A
	Check Aux load cell gap 3/8(0.380) inch (Compression Load Cell Type)				OEM Manual	(✓) YES ( ) NO ( ) N/A
Pedestal & Structure	Visually check Pedestal for chipped/cracked paint, deformation, worn parts, dents, corroded areas, cracks weld, etc.				API RP 2D	(✓) YES ( ) NO
	Check water rain drain at pedestal must be not obstuct				Industry Standard	(✓) YES ( ) NO

[redacted] / 7 Oct 25

SYSTEM	TASK	Specification	Record/Reading
	Check pin and cotter pin of pedestal missing , corrosion, wear, damage and exercise pin.	Industry Standard	(✓) YES ( ) NO
	Visually check Base - Plate connection and Base hoist Structure for chipped/cracked paint, deformation, worn parts, dents, corroded areas, cracks weld, etc.	API RP 2D	(✓) YES ( ) NO
	Check A fixed such as Handrial, Walkway, Grating, stationary structure without significant movement in response to waves and currents in normal operating conditions.	API RP 2C	(✓) YES ( ) NO
	Visually check and lubricate maintenance Jib. ***Note*** If on pedestal crane	OEM Manual	( ) YES ( ) NO (✓) N/A
	Check maintenance jib is secure firmly. ***Note*** If on pedestal crane	OEM Manual	( ) YES ( ) NO (✓) N/A
Box Boom & Luffing CYD	Check and Verify entire box boom and Boom CYD for loss of protective coating and corrosion. Note;.....	API RP 2D	(✓) YES ( ) NO
	Check and Verify entire box boom and Boom CYD for chipped/cracked paint, deformation, worn parts, dents, corroded areas, cracks, etc. Note;.....	API RP 2D	(✓) YES ( ) NO
	Check and Verify boom end connections, for bends, dents, corroded areas, cracked welds, and signs of mechanical damage, wear, etc. **any deviation should be reported**	API RP 2D	(✓) YES ( ) NO
	Check and Verify boom rest and wooden support to ensure it's in good condition	API RP 2D	(✓) YES ( ) NO
	Inspect pin and pin holes of Upper tank and Lower tank for excessive clearance	OEM Manual	(✓) YES ( ) NO
	BOOM CYLINDER PIN MAXIMUM TOLERANCE — 0.125 Inch (3mm)	Industry Standard	As found ok
	Check BOOM CYLINDERS for proper operation and good condition	API RP 2D	(✓) YES ( ) NO
	Check Boom cylinder barrels and rods for leaks, mechanical damage and corrosion	Industry Standard	(✓) YES ( ) NO
	Check and measurement boom foot pin and connection pins for clearance	Industry Standard	
	BOOM FOOT PINS & BOOM BOX CONNECTER PIN TOLERANCE — 0.125 Inch (3mm)	Industry Standard	
	Boom Foot Pin Tolerance	Industry Standard	0.020 inch
	Boom Box Connecter Pin Tolerance	Industry Standard	0.020 inch
	Check connecting bolts of box boom loose, corrosion, wear, damage	OEM Manual	(✓) YES ( ) NO
	Lubricate boom foot pins and bushings	OEM Manual	(✓) YES ( ) NO
	Lubricate boom cylinder pins, bearings and bushings	OEM Manual	(✓) YES ( ) NO
	Boom function test angle/radius to correction **Note; The cylinder(s) mechanism shall be capable of elevating the boom from a minimum of zero degrees to the maximum recommended boom angle.	API RP 2C	(✓) YES ( ) NO
	Operation functional test and verify Boom Creeping down **Note ; Test at angle 60° As-found hyd. oil leaked at seal Luffing CYD L/R	Industry Standard	(✓) YES ( ) NO As found.....
Wire Rope	Determine if parts-of-line match parts of line on the load chart in the crane cabin.	API RP 2D	(✓) YES ( ) NO
	Determine if visible portion of wire rope adequately lubricated. If not lubricate wire rope	API RP 2D	(✓) YES ( ) NO
	For each layer of wire rope on drum, check that all rope is parallel and each crossover point at hoist flanges is correct	API RP 2D	(✓) YES ( ) NO
	The top layer of rope must not be lower to the flange tips 2.5 in for Smooth drum,2 in for groove drum or 2.5 times of wire rope diameter	API RP 2C	(✓) YES ( ) NO
	Inspect wire rope for, kinking, crushing, broken wires, necking down of rope diameter, worn outside wires, corroded or broken wires at end connection, cutting or unstringing.	API RP 2D	(✓) YES ( ) NO As found ok
	NoteRunning Ropes of rotation-resistant construction used in the main or auxiliary Hoist: - Four (4) Randomly distributed broken wires within 30 rope diameter - Two (2) broken wires in one stand within 6 rope diameter	API RP2D Edition 7	(✓) YES ( ) NO As found ok
	One valley break can indicate internal rope damage requiring close inspection of this section of the rope. When one or more valley breaks are found in one lay length the rope should be retired.	API RP2D Edition 7	(✓) YES ( ) NO As found ok
	Reductions for the rope diameter, from initial wire rope dimensional measurements, in a nonworking area (an area away from the sheaves) compared to the lowest diameter of rope measured in three working areas (areas where the rope regularly goes over a sheave) of more than the following is observed: — 3/64 in. (0.047 in.) (1.2 mm) for diameters up to and including 3/4 in. (19.1 mm); — 1/16 in. (0.062 in.) (1.6 mm) for diameters of 7/8 in. to 1-1/8 in. (22.2 mm to 28.6 mm); — 3/32 in. (0.093 in.) (0.8 mm) for diameter of 1-1/4 in. to 1-1/2 in. (31.8 mm to 38.1 mm); — For rope diameters greater than 1-1/2 in., a 5 % diameter loss from baseline measurement. —Wear of one-third the original diameter of the outside individual wires.	API RP2D Edition 7	(✓) YES ( ) NO As found dimension ok
	Increase in the length of an individual rope lay is observed. This increase in lay length and accompanying reduction in diameter can be caused by failure of the core. This can occur more readily in ropes or rotation-resistant construction.	API RP2D Edition 7	(✓) YES ( ) NO As found ok
	-Inspection and Verify running and standing rope from heat effect **Note; Not more than 250°C -There is evidence of heat damage from any source (i.e. engine exhaust, flare towers, stress corrosion cracking, etc.). Heat can be generated by passing a rope over a frozen or non-turning sheave, contact with structural members of the crane, improperly grounded welding leads or lightning strikes	Industry Standard	(✓) YES ( ) NO As found ok
	With the boom at the highest possible angle and the main load block or overhaul ball at the water level, ensure there is a minimum of 5 wraps of wire-rope remaining on the drums. Note: (Thai law, requires minimum of 2 wraps)	API SPEC 2C / Thai Law	(✓) YES ( ) NO
	Reference: - Running rope safety factor not less than 6 for wire rope that are running wire, (Thai law; Wire rope nominal breaking strength x number parts of line / Design factor 6) - Standing rope safety factor not less than 3.5 for wire rope that are stay cables, (Thai law)	Thai Law	(✓) YES ( ) NO ( ) N/A
	Measure and record nominal diameter of "running ropes"main and auxiliary (particularly on drum, equalizer sheave and at sockets, clips and dead end points) *****Nominal = several measurements added together divided by Number of measurements*****	API RP 2D	(✓) YES ( ) NO
	Inspect wire rope and record dimension.	API RP 2D	
	MAIN WIRE ROPE OD: — FULL DRUM	OEM Manual	0.655 inch
	MAIN WIRE ROPE OD: — HALF DRUM	OEM Manual	0.656 inch
	MAIN WIRE ROPE OD: — WATER LEVEL	OEM Manual	0.654 inch
	AUX WIRE ROPE OD: — FULL DRUM	OEM Manual	0.652 inch
	AUX WIRE ROPE OD: — HALF DRUM	OEM Manual	0.656 inch
	AUX WIRE ROPE OD: — WATER LEVEL	OEM Manual	0.652 inch
	Slip-Cut 1 meter of all ropes at the wedge socket and re-wedge to prevent rust inside of wedge socket (at outward end of rope, not on hoist drum) Dead end tail length is never less than 6 inches, or: - Standard 6 to 8 Strand wire rope is not less than 7 times the rope diameter - Rotation Resistant Wire Rope is not less than 20 times the rope diameter	Company Spec/Standard	(✓) YES ( ) NO
	U-bolt and Fist Grip Clips: Extreme care should be exercised to assure proper orientation of U-bolt clips. The U-bolt segment shall be in contact with the wire rope dead-end. The orientation, spacing, torquing, and number of all clips shall be in accordance with the crane manufacture's specifications.	API SPEC 2C	(✓) YES ( ) NO

[redacted] / 7 Oct 21

SYSTEM	TASK	Specification	Record/Reading
	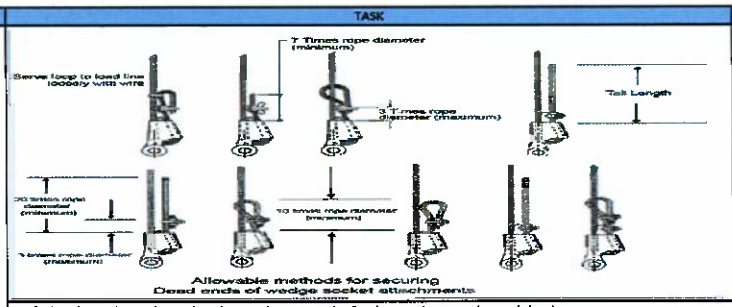	API SPEC 2C	Model and Size wedge socket. Main hoist. Model..... Size.....5/8..... Aux.Hoist. Model..... Size.....5/8.....
	Verify that the wedge socket and wedge are the correct size for the rope in use and record the size	API SPEC 2C	(✓) YES ( ) NO
Sheaves & Bearings	Lubricate all sheave bearings.	API RP 2D	(✓) YES ( ) NO
	Visually inspect all sheaves and bushings for cracks, wear and deterioration	API RP 2D	(✓) YES ( ) NO As found.....OK.....
	Visually inspect wire rope track of sheave for rope imprints, wear and deterioration. If damage exist sheave should be resurfaced or replaced.	API RP 2D	(✓) YES ( ) NO As found.....OK.....
	Pins retained by snap rings, bolt lock shafts, plates lock should be checked for missing or loose for all	API RP 2D	(✓) YES ( ) NO
	Check wirerope guards and keepers for proper location and condition.	API RP 2D	(✓) YES ( ) NO
	Determine if wire rope is jumping the sheaves, by looking for signs of damage on the sheave brim	Industry Standard	(✓) YES ( ) NO
	Sheave Rope Profile for optimum Rope life the sheave groove profile should be correctly matched to the rope diameter	Industry Standard	(✓) YES ( ) NO
	Check rope sheave should be machine grooved to adepth of not less than 1.5 times the norminal diameter of the rope	Industry Standard	(✓) YES ( ) NO
	MAIN POINT SHEAVES: Note;.....	Industry Standard	No.1 ( ) YES ( ) NO No.2 (✓) YES ( ) NO
	AUX SHEAVES: Note;.....	Industry Standard	No.1 (✓) YES ( ) NO
	IDLER SHEAVES: Note;.....	Industry Standard	AUX. (✓) YES ( ) NO Main (✓) YES ( ) NO
	Pins for bronze bushing and straight roller bearing should have a running clearnace of .031 inch/ sheave of end play and should be adjusted accordingly.(count from left)	Industry Standard	( ) YES ( ) NO
	MAIN POINT SHEAVES:	Industry Standard	Sheave No.1.....18..... inch Sheave No.2.....18..... inch
	AUX SHEAVES:	Industry Standard	Sheave No.1.....14..... inch
	IDLER SHEAVES:	Industry Standard	Sheave AUX.....18..... inch. Sheave Main.....18..... inch.
	Ensure the sheaves are aligned and the fleet angle is correct **Remark ; Wire rope User's Manual allows 2 degree on grooved winch drum, Smooth Drum shuold be not more than 1-1/2 degree	API RP 2D	( ) YES ( ) NO
	Determine if wire rope size and sheave sizes/grooves are compatible and record size. Sheave pitch diameter (D) to nominal wire rope diameter (d) ratio (D/d) shall not be less than 18:1	API SPEC 2C	( ) YES ( ) NO
	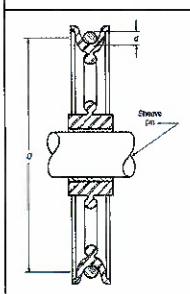 MAIN POINT SHEAVES: — SHEAVE D / WIRE ROPE d = >18	API SPEC 2C	18 inch (D) 0.625 inch (d) 28 (Ratio D/d)
	AUX SHEAVES: — SHEAVE D / WIRE ROPE d = >18	API SPEC 2C	14 inch (D) 0.625 inch (d) 22 (Ratio D/d)
	IDLER SHEAVES: — SHEAVE D / WIRE ROPE d = > 18 (If applicable)	API SPEC 2C	18 inch (D) 0.625 inch (d) 28 (Ratio D/d)
	MAIN BLOCK SHEAVES: — SHEAVE D / WIRE ROPE d = > 16	API SPEC 2C	16 inch (D) 0.625 inch (d) 25 (Ratio D/d)
Load Block	Load Block: Check the load block for cleanliness, binding sheaves, damaged or worn sheaves, worn or distorted sheave pins, broken bolts, and worn cheek weights. Note ;.....	Industry Standard	(✓) YES ( ) NO As found.....OK.....
	Hook: Check the hook damage, excessive wear to the hook safety latch, hook swivel trunnions, thrust collar, securing, damage or missing lubrication fittings, proper lubrication, cracks and gouges, and if visibly bent or twisted or has been exposed to welding or arching. Note ;.....	Industry Standard	(✓) YES ( ) NO As found.....OK.....
	Hook: Tip has been bent more than 10 degree out of plane from the hook body	Industry Standard/API RP2D7	(✓) YES ( ) NO As found.....OK.....
	Inspect the Pins for bronze bushing and straight roller bearing should have a running clearnace of .031 inch/ sheave of end play and should be adjusted accordingly	Industry Standard	(✓) YES ( ) NO
	Inspect Hook or shackle to swivel case clearance is set at .031 to .062 inch, Clearance exceeding .12 to .18 (ONLY CROSBY BRAND)	OEM Crosby	(✓) YES ( ) NO
	OEM STANDARD RECOMMEND that Crane block removal from service untill replaced and repair following below	OEM STANDARD	
	-Elongated center pin and hook trunnion holes exceeding 5% of Original diameter	OEM STANDARD	(✓) YES ( ) NO As found.....OK.....
	-Material loss due to wear exceeding 10% of original section	OEM STANDARD	(✓) YES ( ) NO As found.....OK.....

[redacted] / 9 Oct 25

SYSTEM	TASK	Specification	Record/Reading
	-Sheave wire rop groove diameter smaller than 2.5%	OEM STANDARD	( ) YES ( ) NO As found ok
	Loosened tie bolts nuts, center pin round nuts, check weight cap screws and hook nut cap screws. Tie bolt nuts to be torqued to 35-40 ft.Lbs and restaked, all other fasteners wrench tight	OEM STANDARD	✓ YES ( ) NO
	Throat opening - any distortion causeing an increase in throat opening of 5% not ot exceed 1/4 in. (6 mm.)(or as recommended by the manufacturer)	ASME B30.10	✓ YES ( ) NO
	Inspect rope track worn in sheave groove, sheave must be resurface or replace	API RP 2D	✓ YES ( ) NO
	Ensure the load block is not using "Cast Iron" cheek weights they can not be used as per API	API SPEC 2C	✓ YES ( ) NO As found ok
	Determine if all hooks are equipped with properly operating safety latches and check for proper functioning	API RP 2D	✓ YES ( ) NO
	Lubricate sheave bearings and swivels	OEM Manual	✓ YES ( ) NO
	Re-thighten nut firmly to point at which trunion will just rotate, the Re-tighten set-screw in nut and thread condition as in the picture below,	Industry Standard	✓ YES ( ) NO
	Last NDE inspection record	Industry Standard	Last inspect date —
	RECORD LOAD BLOCK INFORMATION : Manufacturer:	OEM Manual	MCKISSICK
	Model:	OEM Manual	M025D16FM4
	Serial Number:	OEM Manual	0888601
	Record Load block measurements and details for future comparison with historical data ☒	Industry Standard	✓ YES ( ) NO
	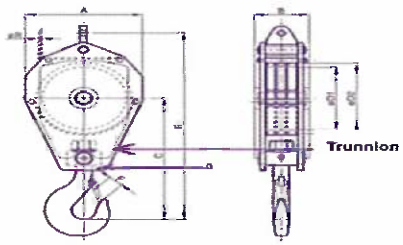 A - Block OD	Industry Standard	10.0 inch
	B - Block length	Industry Standard	13 inch
	C - Center of Pin to hook Saddle	Industry Standard	24 inch
	D1 - Sheave Diameter	Industry Standard	16 inch
	E - Block Width	Industry Standard	32 inch
	F - Throat Opening	Industry Standard	5 inch
	G - Trunnion	Industry Standard	0.052 inch
Aux. Ball	Inspect Auxiliary ball for cleanliness, binding swivel, work pad-eye hole. Inspect the hook damage, excessive wear to the hook safety latch, Bent connector plates,Severe corrosion pitting, hook swivel trunnions, thrust collar, securing, damage or missing lubrication fittings,Loose, missing or damaged retaining nuts, cotter pins or swivel set screws ,Missing or illegible rating and warning tags, proper lubrication, cracks and gouges, and if visibly bent or twisted or has been exposed to welding or arching.	Industry Standard	✓ YES ( ) NO
	Hook: Tip has been bent more than 10 degree out of plane from the hook body	Industry Standard/API RP2D7	✓ YES ( ) NO
	OEM STANDARD recommend that Crane overhaul ball removal from service untill replaced and repair following below	OEM STANDARD	
	- Elongated ball pin holes, hook latch pin holes and swivel eye exceeding 5% of original diameter,	OEM STANDARD	✓ YES ( ) NO As found ok
	-Swivel end play gap exceeding .08". Excessive end play indicates damaged internal set screw	OEM STANDARD	✓ YES ( ) NO As found ok
	-Material loss due to wear exceeding 10% of original section	OEM STANDARD	✓ YES ( ) NO As found ok
	Throat opening - any distortion causeing an increase in throat opening of 5% not ot exceed 1/4 in. (5 mm.)(or as recommended by the manufacturer)	ASME B30.10	✓ YES ( ) NO
	All hooks that lift personnel are to have a positive locking safety latch **locking Pin to be used while lifting personnel**	API RP 2D	✓ YES ( ) NO
	*** Temperature Effected : When hooks are to be used at temperature above 400° F. (204°C) or below -40°F (-40°C), the hook manufacturer or a qualified person should be consulted *** Chemically Active Environment : The strength of hooks can be affected by chemically active environments, such as caustic or acid substances or fumes. The hook manufacturer or qualified person should be consulted before hooks are used in chemically active environment	ASME B30.10	
	Verify to ensure nut firmly at which trunion rotate. Identify to set-screw in nut/ swivel/ counter pin and thread condition.	Industry Standard	✓ YES ( ) NO
	Last NDE inspection record	Industry Standard	Last inspect date —
	RECORD AUX BALL INFORMATION : Manufacturer:	OEM Manual	MCKISICK
	Model:	OEM Manual	MB071
	Serial Number:	OEM Manual	-
	Record Auxiliary Ball measurements and details for future comparison with historical data: For Model MB07T200E ONLY	Industry Standard	
	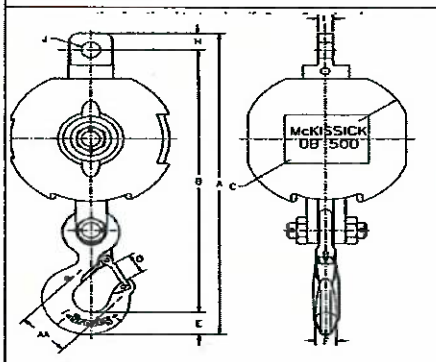 AA Dimensions 3.0 Inch	Industry Standard	3.0 inch
	A Dimensions 24.89 Inch	Industry Standard	29.8 inch
	B Dimensions 21.71 Inch	Industry Standard	21 inch
	C Dimensions 12.50 Inch	Industry Standard	12 inch
	D Dimensions 1.61 Inch	Industry Standard	1.6 inch
	E Dimensions 1.81 Inch	Industry Standard	1.8 inch
	F Dimensions 1.38 Inch	Industry Standard	1.4 inch
	H Dimensions 1.38 Inch	Industry Standard	1.4 inch
	I Dimensions 0.88 Inch	Industry Standard	0.85 inch
	J Dimensions 1.31 Inch	Industry Standard	1.3 inch
Safety system	Check Condition anti - two block , hanging chain ,eye bolts , fix bolts , shackle for missing , corrosion , erosion , deformation	API RP 2D	✓ YES ( ) NO
	Check anti - two block kick out plate for freely movement	Company Spec/Standard	✓ YES ( ) NO
	Check anti-2-block device proper function of Main winch	Company Spec/Standard	✓ Function ( ) False
	Check anti-2-block device proper function of Aux. winch	Company Spec/Standard	✓ Function ( ) False

[redacted] / 9 Oct 25

SYSTEM	TASK	Specification	Record/Reading
	Check relation of boom radius and boom angle (lowest, middle, highest) with refrence to load chart. Recharge fluid W-15 to load indicator, if required.	API RP 2D	(✓) YES ( ) NO
	Functional test of emergency lowering system (See procedure in Emergency Load Lowering Box). Note: Keep for 1 Yr PM to sustain crane mechanic competency. Caution: Function test must be performed on top deck with max 2-foot height. Keep in CRANE MECH HOTA shop.	Company Spec/Standard	(✓) YES ( ) NO ( ) N/A
	Visually check emergency load lowering kit. Ensure EMERGENCY LOWERING PROCEDURE and MATERIAL LIST are in the box. - Ensure ALL items shown on the list are in the box and in good condition - SECURE THE BOX WITH A TIE WRAP.	Company Spec/Standard	(✓) YES ( ) NO ( ) N/A
Slew Mechanism	Visually check for damage and excessive wear on gear teeth	OEM Manual	(✓) YES ( ) NO
	Visually check slew gear box in the area of oil seal for any leaks	API RP 2D	(✓) YES ( ) NO
	RECORD SLEW GEAR BOX INFORMATION : Manufacturer:	OEM Manual	ESK250
	Model:	OEM Manual	2581
	Serial Number:	OEM Manual	93012
	CHECK and RE-TORQUE swing drive gearbox mounting bolts at following brands: - ESKRIDGE, Model: 250 = 150 FT-LBS	API RP 2D	(✓) Yes ( ) No
	Check swing gearbox oil level/condition, top up if required	OEM Manual	(✓) YES ( ) NO
	Monitor slew gearbox oil condition by visually examine for burnt smell, metal particles, and/or other contaminants, record and change if found. (Meropa 220)	OEM Manual	(✓) CHANGE OIL ( ) NOT CHANGE OIL
	Change slew gear box oil (Meropa 220)	OEM Manual	(✓) CHANGE OIL ( ) NOT CHANGE OIL
	Grease all pivot points of slew ring (bearing)	OEM Manual	(✓) YES ( ) NO
	Grease open gears (pinion)	OEM Manual	(✓) YES ( ) NO
	Rotate crane 360 degree and check smoothness of operation	OEM Manual	(✓) YES ( ) NO
	Check swing drive static parking brake for proper operation Caution: DO NOT stop the swing of the crane with this static brake (parking brake)	OEM Manual	(✓) YES ( ) NO
	Check swing drive dynamic parking brake for proper operation	OEM Manual	(✓) YES ( ) NO
	Check swing lock mechanism condition; corrosion ,dent , loos all part,worn and wear	OEM Manual	(✓) YES ( ) NO As found condition: OK
	Check swing lock mechanism freely lock and unlock for function. **Check and Inspect for hydraulic for leaks on actuator model.**	OEM Manual	(✓) YES ( ) NO As found condition: OK
	Check condition of slew ring bolts e.g. Bolt grade and washers. Caution: Use only hardened flat washers under head of bolt. Do not use lock washers, or regular flat washers.	Industry Standard	(✓) YES ( ) NO As found condition: OK
	Monitor ball-ring grease sample. If found wear and tear particles, take sample and send to lab. **Wear assessment by grease sample analysis—wear may be monitored by periodic grease sample analysis as describe in this section. Grease samples should be collected every twelve months as a minimum and the results of the analysis recorded; this period should be shortened if obvious metal or contaminants are present.	API PR 2D	( ) SEND TO LAB (✓) NOT SEND TO LAB As found: OK
	Verify crane condition and load test as separate procedure.	API 2C	(✓) YES ( ) NO Specific test load: 3800 lbs.
	Verify crane condition and load test as separate procedure. " Record crane load test in load test form."	Company Standard	(✓) YES ( ) NO

Table 1—Static/Onboard Test Load and Radius

Static/Onboard Rated Load at a Specific Radius lb (kg)	Test Loads in Excess of Static/Onboard Rated Load at a Specific Radius
≤ 40,000 (18,144)	25 %
> 40,000 ≤ 100,000 (>18,144 ≤ 45,356)	10,000 lb (4536 kg)
> 100,000 (45,356)	10 %

Risk Level Definitions: The following 3 levels indicate the impact the noted deficiency poses to the operation or structural integrity of the equipment:

Level 1 = Incidental	Level #2 = Restricted Operation	Level #3 =Out of Service
Minor deficiency that is recommended to be promptly addressed, but poses no safety and/or environmental risk. The crane can still be operated at full duty.	Deficiency identified that has the potential to limit, de-rate or damage the crane, its surroundings and/or the environment. The duty and locked/ tagged out until the crane's duty and operation should be de-rated or service restricted.	The crane should be removed from duty and locked/ tagged out until the deficiency is rectified.

System:	Risk Level:	Component: LUFFING CYLINDER	In Accordance with:
		Location: BOOM	Date Originated:
Description:	BOOM LUFFING CYLINDER HYD OIL LEAKED AT SEAL CAP.		
Recommended Action:	NEED TO REPLACE		
Recommended urgency timeframe for corrective action:		Completed Date:	Completed By:

System:	Risk Level:	Component:	In Accordance with:
		Location:	Date Originated:
Description:			
Recommended Action:			
Recommended urgency timeframe for corrective action:		Completed Date:	Completed By:

System:	Risk Level:	Component:	In Accordance with:
		Location:	Date Originated:
Description:			
Recommended Action:			
Recommended urgency timeframe for corrective action:		Completed Date:	Completed By:

System:	Risk Level:	Component:	In Accordance with:

[redacted] / Y Cat 2X

SYSTEM	TASK			Specification	Record/Reading
	Location:			Date Originated:	
Description:					
Recommended Action:					
Recommended urgency timeframe for corrective action:		Completed Date:		Completed By:	

System:	Risk Level:	Component:		In Accordance with:	
		Location:		Date Originated:	
Description:					
Recommended Action:					
Recommended urgency timeframe for corrective action:		Completed Date:		Completed By:	

System:	Risk Level:	Component:		In Accordance with:	
		Location:		Date Originated:	
Description:					
Recommended Action:					
Recommended urgency timeframe for corrective action:		Completed Date:		Completed By:	

Job compleate Date: 3 Oct 25

[redacted]

4502 hrs

CRANE Mfg.: Nautilus
MODEL: 180B1-80 (MS)
SERIAL NUMBER: Crane Specific

LOCATION: SRWB

DATA BASE - PM JOB TASK CARD
WO:1251252

Crew Size: 3
Estimated Hours: 48

SYSTEM	TASK		Specification	Record/Reading
Safety	Perform Job Safety Analysis (JSA)		Company Spec/Standard	(✓) YES ( ) NO
	Obtain "COMPANY" PERMIT TO WORK		Company Spec/Standard	(✓) YES ( ) NO
	Perform Tool Box Talk		Company Spec/Standard	(✓) YES ( ) NO
	BEFORE/AFTER JOB EXECUTION: Ensure to comply with isolation procedure (LOCK OUT/TAG OUT, WARNING SIGNS and BARRIERS).		Company Spec/Standard	(✓) YES ( ) NO
Required Tools	Insure proper tools are available at the job site		Company Spec/Standard	(✓) YES ( ) NO
	Tool bag		Company Spec/Standard	(✓) YES ( ) NO
	Tool box		Company Spec/Standard	(✓) YES ( ) NO
	Tool Container		Company Spec/Standard	(✓) YES ( ) NO
	MPI equipment and operator		Company Spec/Standard	(✓) YES ( ) NO
	Check safety harness Software and Hardware should be good condition before use		Company Spec/Standard	(✓) YES ( ) NO
	Check Rescue Equipment ready to use onsite		Company Spec/Standard	(✓) YES ( ) NO
	Portable Scaffolding and Crew if require		Company Spec/Standard	(✓) YES ( ) NO
Lubricants	Insure proper lubricants and consumables are available at the job site.		Company Spec/Standard	(✓) YES ( ) NO
	Hydraulic System - Hydraulic Oil	Rando HD-68	OEM Manual	(✓) YES ( ) NO
	Slew Gearbox - Gear Oil	Meropa 220	OEM Manual	(✓) YES ( ) NO
	Auxiliary Hoist - Gear Oil	Meropa 220	OEM Manual	(✓) YES ( ) NO
	Main Hoist - Gear Oil	Meropa 220	OEM Manual	(✓) YES ( ) NO
	Grease Points - Lithium Based **IT MUST NOT INCLUDE MOLYBDENUM DISULPHIDE**	MULTIFAK EP#2	OEM Manual	(✓) YES ( ) NO
	Open Gear Teeth - Open Gear Lube highly water resistant and of an adhesive nature.	OMEGA 73	OEM Manual	(✓) YES ( ) NO
	Pneumatic Lubricator	SAE Grade 10	OEM Manual	(✓) YES ( ) NO
	Wire rope Lubricant Company preferred grade	Birlube 70	OEM Manual	(✓) YES ( ) NO
	Engine Oil - SAE Grade 15W-40 (Delo Gold)	15W-40	OEM Manual	(✓) YES ( ) NO
	Safe Load Indicator fluid	W-15	OEM Manual	(✓) YES ( ) NO
	Engine Radiator - Should have radiator preservatives additives	Cat® SCA	OEM Manual	(✓) YES ( ) NO
Consumables	Spray Cold Galvanize		Company Spec/Standard	(✓) YES ( ) NO
	Denso Tape		Company Spec/Standard	(✓) YES ( ) NO
	WD-40		Company Spec/Standard	(✓) YES ( ) NO
History Review	Before starting work, tasks preparation at least 1 day prior to starting work: 1. Review history PM/ CM from Roving Team, 2. Review last PM/ CM/ PMI from Crane Mech, 3. List out all punch list and prepare parts. 4. Review last Certificate task performed		API RP 2D	(✓) YES ( ) NO
	Require to update part history from Crane Mech on following main compenents to ensure the right parts are prepared: - Aux/ Main/ Boom Cylinder, Engine, Swing Gearbox, etc. Reference: Crane OEM information of each part need to be recorded - Manufacturer & Contact info - Model & serial number - Installation date		Company Spec/Standard	(✓) YES ( ) NO
	Review history data from Certificates and incorporate into current PM: - Pull Test Certificates (ongoing update, 4 yr. history). - Load Test Certificates (ongoing update, 4 yr. history). - Wire Rope Certifications (running rope and standing rope) (life of rope). - Hoist Certifications for hoist classified as "personnel handling" hoist.		API RP 2D	(✓) YES ( ) NO
	Review Last Preventative Maintenance Records (Inspection Reports) - Pre-use (Pre-Post Inspection) - 6 Monthly (API RP 2D Not Defined, Company Standard) - 1 Yearly (API RP 2D Defined Annual Inspection)		API RP 2D	(✓) YES ( ) NO
Lifting Gear Preparation	Visually Inspect (Sling, sling hooks and shackles) include Websling / Chain		Company Spec/Standard	(✓) YES ( ) NO
	Check color code / Tag & date inspection		Company Spec/Standard	(✓) YES ( ) NO
General	Determine if access route to-from crane is clean, safe, unobstructed and adequately protected against falls, tripping and slipping		Company Spec/Standard	(✓) YES ( ) NO
	Check drain lines and drip pans for deterioration		API RP 2D	(✓) YES ( ) NO
	Remove any sediment collected in the bottom of drip pans		Industry Standard	(✓) YES ( ) NO
	Check for general crane and components for loss of protective coating and corrosion		Industry Standard	(✓) YES ( ) NO
	Check for missing or loose ,corrosion, deformation pins, pin keepers, bolts, nuts, fasteners of all laders, cages and working platform		API RP 2D	(✓) YES ( ) NO
	Apply grease to exposed grease parts (control valve spools, ball-ring gear, parking brake valve, etc.)		OEM Manual	(✓) YES ( ) NO
Prime Mover	Engine Caterpillar		OEM Manual	(✓) YES ( ) NO
	CATERPILLAR MODEL 3216	S/N.:	OEM Manual	9ZR03400
		AR.No.:	OEM Manual	158-4383
	Change engine lube oil & oil filter and check the condition of old oil. As found ;		OEM Manual	(✓) YES ( ) NO
	Check diesel tank level, top up if required.		OEM Manual	(✓) YES ( ) NO
	Check / Clean crankcase breather cap. Change if required		OEM Manual	(✓) YES ( ) NO
	Check / Clean air cleaner filter, Replace if require. (Note : Include inspect air cleaner housing)		OEM Manual	(✓) YES ( ) NO
	Check condition and inspect of the radiator and cap.		OEM Manual	(✓) YES ( ) NO
	Check for any signs of leaks on or around the engine ie; Crankshaft seal for front & rear seal , Engine oil cooler. As found;		OEM Manual	(✓) YES ( ) NO
	Check condition exhaust system for leaks, corrosion, insulation and general. As found ;		OEM Manual	(✓) YES ( ) NO
	Check condition of all engie hoses and tube. (Fuel supply,Cooling system and Lube oil system. As found;		OEM Manual	(✓) YES ( ) NO
	Drain water and sediment form diesel tank. As found ;		OEM Manual	(✓) YES ( ) NO
	Check / Clean Diesel tank level sightglass and diesel tag.		OEM Manual	(✓) YES ( ) NO
	Apply grease of fan bearing/shaft.		OEM Manual	(✓) YES ( ) NO
	Check and inspect the vibration damper and pulley. As found ;		OEM Manual	(✓) YES ( ) NO
	Change water coolant and check condition base of water coolant and record PH.		OEM Manual	(✓) YES ( ) NO
	COOLANT PARAMETERS (PH):	6 or higher	OEM Manual	PH = 7
	HOUR METER PARAMETERS:	LAST READING _____ HRS	OEM Manual	4502 HRS
	Check and retigthen the bolts of all engine base. / Inspection mouting rubber. As found ;		OEM Manual	(✓) YES ( ) NO
	Inspect the engine fan blades that there is a break is it severely distorted or rusted. As found ;		OEM Manual	(✓) YES ( ) NO

[redacted] / 9 Mar 25

SYSTEM	TASK			Specification	Record/Reading
	Change and adjust the tension engine belts. Remark; To check belt Tension, after has engine run more than 30 minules apply 400 N (90 lbs) of force midway between the pulleys. Correctly adjusted belts with deflect 13 to 19 mm (1/2 to 3/4 inch).			OEM Manual	(✓) YES ( ) NO
	Check engine HYD starter drive gear bendix and fly wheel gear teeth condition and record. **Replace if required"			OEM Manual	(✓) YES ( ) NO Bendix Gear: 95 % Fly wheel Gear teeth : 95 %
	Check and inspect condition the Bendix of hydraulic Starter motor.			OEM Manual	(✓) YES ( ) NO
	Lubricate and check engine throttle system.			OEM Manual	(✓) YES ( ) NO
	Determine if the tachometer operates properly: Record Value of Idle & Max Speed (RPMs) Note: Too low Idle (RPM5) will cause excessive worn at winch brake			OEM Manual	
	ENGINE RPM SPECIFIC	IDLE SPEED	850-950 RPM	OEM Manual	850 RPM
		MAX SPEED	2200 RPM	OEM Manual	2200 RPM
	Confirm engine oil pressure as per Parameters below and Record Value:			OEM Manual	
	ENGINE OIL PRESSURE SPECIFIC	Minimum	Not lower then 30 PSI	OEM Manual	30 PSI
		Maximum	70 PSI	OEM Manual	70 PSI
	Confirm engine fuel pressure Parameters are correct and Record Value:			OEM Manual	
	ENGINE FUEL PRESSURE SPECIFIC** **Note;Fuel pressure at high idle is lower than 105 kPa (15 psi)RAMETERS	Normal	Green Range/ 15 PSI	OEM Manual	(✓) YES ( ) NO
	Confirm engine temperature Parameters and Record Value:			OEM Manual	
	ENGINE WATER TEMP SPECIFIC	NORMAL	120 - 180 degrees F	OEM Manual	180 F
	Test engine SAFETY DEVICE- ensure engine kill cable shuts off FUEL supply			API RP 2D	(✓) Function ( ) False
	Test engine SAFETY DEVICE- ensure EMERGENCY KILL CABLE - shuts off AIR supply			API RP 2D	(✓) Function ( ) False
	Test engine SAFETY DEVICE- ensure ENGINE low lube oil - releases OIL PRESSURE to ctivate Alarm Air System ***Note*** Engine oil pressure low alarm at 20 PSI			Company Spec/Standard	(✓) Function ( ) False
	Test engine SAFETY DEVICE- ensure HIGH TEMP - releases OIL PRESSURE to activate Alarm Air System			Company Spec/Standard	(✓) Function ( ) False
	Change water separator filter.			OEM Manual	(✓) YES ( ) NO
	Check the general conditionand functioning of turbocharger. Note;			OEM Manual	( ) Leak (✓) Not Leak
	Change fuel filter and inspect the primary hand pump.			OEM Manual	(✓) YES ( ) NO
	Check water temperator regulator.(Thermostat). Change if require refer from cooling temperature.			OEM Manual	(✓) YES ( ) NO
	Check general condition the Governor and control linkage. (Inspect the throtle linkage)			OEM Manual	(✓) YES ( ) NO
	Check or adjust the engine valve lash. (Intake vale = 0.015", Exhaust valve = 0.025")			OEM Manual	(✓) YES ( ) NO
	Check or adjust the fuel timing control linkage of Unit Injector (CAT 3126) Reference: Fuel timing injection length, use the following references to obtain information: - Engine Information Plate (located at valve cover) Specific data .....mm/inch. Engine S/N 9ZR03500 - TMI (Technical Marketing Information - located at Manual Book) - Fuel setting and related Information Fiche			Company Spec/Standard	____mm/ Inch (After Adjustment)
	Check condition wear of pump drive spline and record **Note; Remaining 70% of Original Spline Surface must be replace.			Company Spec/Standard	80 % Remaining
	Check condition wear of adaptor Coulping spline shaft and record **Note; Remaining 70% of Original adaptor Coulping spline shaft Surface must be replace.			Company Spec/Standard	90 % Remaining
	Check condition wear of Coulping spline and record. Re-tigthen of all lock bolts. **Note; Remaining 70% of Original adaptor Coulping spline shaft Surface must be replace.			Company Spec/Standard	80 % Remaining
Hydraulic Start System (Apply for C2-Remote P/F Only)	Check pressure system at the pressure gauge which should reach 3,000 PSI as standard when the system is FULLY charged. Record Value. (As the system cools down, the pressure should drop slightly and finally stabilised.)			OEM Manual	(✓) YES ( ) NO
	Visually inspect all hydraulic connections and hoses for leaks and retighten if necessary. (Caution: This should NOT be done if the system is under pressure.) 1. Slowly release system pressure by loosening the bleed screw on top of the hand pump. 2. Ensure no pressure remains, retighten the suspected leak fitting or replace the damaged hose or component. 3. Retighten the bleed screw on the hand pump. 4. Pump the system up to 2200 - 2600 PSI 5. Inspect that the leak was eliminated.			OEM Manual	(✓) YES ( ) NO
	Function check Accumulator Pre-charge. (Caution: This should NOT be done if the system is under pressure.) 1. Shut the engine off, release system pressure via the bleed screw on top of the hand pump 2. Retighten bleed screw and actuate the hand pump. The pressure will rapidly increase and then stabilised. This pressure is related to accumulator gas pre-charge pressure. 4. If the pressure rapidly increase to 3000 PSI, it indicates that the accumulator has lost its gas charge. 5. Troubleshoot as necessary			OEM Manual	(✓) YES ( ) NO
	Check function rechaging system by function boom down while the engine running. 1. The crane engine is running at 1,000-1500 RPM. 2. Slowly control lever boom function down for charging pressure to accumulator. 3. This pressure should read on prssure gauge between 2200 - 2600 PSI depending on the recharge ratio 80% std. (90% optional). Record Pressure Value.			OEM Manual	2600 PSI
	Check Nitrogen pressure in Accumulator ***Note**spec @ 1,500 psi as follow schematic and if found pressure loss below 1400 PSI then prepare recharge nitrogen in system			OEM Manual	1500 PSI
	Every 36 months or 2000 engine running hours (approximately 1500 starts) replace the high pressure filter.			OEM Manual	(✓) YES ( ) NO ( ) N/A
Pneumatic System	Check for noisy compressor operation, which could indicate a worn drive gear coupling, a loose pulley or excessive internal wear			OEM Manual	(✓) YES ( ) NO
	Check Air Compressor external oil supply and return lines, if applicable, for kinks, bends, or restrictionsto flow			OEM Manual	(✓) YES ( ) NO
	Inspect the Air compressor discharge port, inlet cavity and discharge line for evidence of restrictions and carboning. (If excessive buildup is noted)			OEM Manual	(✓) YES ( ) NO
	Check all hose connections are sound and all mounting and pivoting connections are secure.			OEM Manual	(✓) YES ( ) NO
	Check condition / Clean and lubricate unloading valve			OEM Manual	(✓) YES ( ) NO
	Check proper air pressure is available for the system. Record Value.			OEM Manual	
	AIR SYSTEM PARAMETERS:		MAX 60 PSI	OEM Manual	60 PSI
	Visually inspection condition of air receiver for signs of corrosion or loose of structural integrity.			Industry Standard	(✓) YES ( ) NO
	Check the hose, piping and tubing for mechanical damage, corrosion, splits, blisters, cracking or excessive abrasion on the outer surface			Industry Standard	(✓) YES ( ) NO
	Drain off air filter and reciever to remove condensed water. If water is present, drain until water is removed.			Industry Standard	(✓) YES ( ) NO
	Check proper operation of pop off valve, by manually functioning valve.			Industry Standard	(✓) YES ( ) NO
	Check proper operation of manual latch valve, by manually functioning latch.			Industry Standard	(✓) YES ( ) NO
	Check proper operation of small engine alarm horn.			Industry Standard	(✓) YES ( ) NO
Hoist / Brakes	Visually check a hoist exhibits erratic operation and/or unusual noise, the hoist must be taken out of service until it is inspected and serviced by a qualified technician. Continued operation of a hoist with a defect in a critical component may lead to loss of load control, property damage, serious injury or death.			OEM Manual	(✓) YES ( ) NO
	Visual exteriors of hoist, frames, drums and flanges for damage, leaks, cracks and wear and repair/replace as required to maintain the structural integrity of the hoist.			OEM Manual	(✓) YES ( ) NO

[redacted] / 9 Mar 25

SYSTEM	TASK			Specification	Record/Reading
	Check all hoist mounting pins, bolts or other fasteners and replace or tighten as necessary.			OEM Manual	✓ YES ( ) NO
	Lubricant level must be maintained between the minimum and maximum levels; midway up sight glass or at bottom of level plug port as equipped and check/clean plug vent. Use only the recommended type of lubricant.			OEM Manual	✓ YES ( ) NO
	Inspect Brake Valve Opening Pressure test V/V 1-1/4" PD Series : no lower than 550 PSI V/V 1-1/2" CH Series : no lower than 575 PSI	Main		Braden Bulletin 527-Dec,1996	650 PSI
		Aux			650 PSI
	Inspect Brake cylinder opening pressure test. CH/PD Series : 400-450 PSI.	Main		Industry Standard	600 PSI
		Aux			400 PSI
	Measure differancian of static and dynamic brake. CH/PD Series : 150-250 PSI.	Main		Industry Standard	150 PSI
		Aux			200 PSI
	Check for external oil leaks and repair as necessary. This is extremely important due to the accelerated wear that will result from insufficient lubricating oil in the hoist.			OEM Manual	✓ YES ( ) NO
	RECORD BOOM CYLINDER INFORMATION :	Boom cylinder Diameter:		OEM Manual	DIA: 12 Inch
		CY Number:		OEM Manual	L= 9892-3 R= 9892-4
		Serial Number:		OEM Manual	L= 6398 R= 6399
	RECORD MAIN HOIST INFORMATION :	Manufacturer:		OEM Manual	Braden
		Model:		OEM Manual	CH175B-23190-02-1
		Serial Number:		OEM Manual	1708892
	Check MAIN HOIST for proper operation and good condition			API RP 2D	( ) YES ( ) NO
	Brake test & record pressure of MAIN HOIST.			OEM Manual	✓ YES ( ) NO As found 9000
	Change main hoist gear oil and inspect for small particles in the old oil. ** Refer to Onsite Gear Oil Sample Procedure ** ** Replace and send oil sample to SKL if abnormal ** ** Take photo of Oil Sampling for Reference**			OEM Manual	✓ YES ( ) NO As found
	RECORD AUXILIARY HOIST INFORMATION :	Manufacturer:		OEM Manual	Braden
		Model:		OEM Manual	PD12C-29064-04-1
		Serial Number:		OEM Manual	1257222
	Check AUXILIARY HOIST for proper operation and good condition			API RP 2D	✓ YES ( ) NO
	Brake test & record pressure of AUXILIARY HOIST			API RP 2D	✓ YES ( ) NO
	Change Aux. hoist gear oil and inspect for small particles in the old oil. ** Refer to Onsite Gear Oil Sample Procedure ** ** Replace and send oil sample to SKL if abnormal ** ** Take photo of Oil Sampling for Reference** Please record if any abnormal condition. Note.....			OEM Manual	✓ SEND SKL LAB ( ) NOT SEND SKL LAB
	Check pressre relief Valve: Determine hoistes' relief valve pressure gauge is working and giving accurate measurement by notice whether pressure gauge is vibrating or not. If not, set relief valve pressure in accordance with the schematic and parameters below. Record all readings.			OEM Manual	✓ YES ( ) NO
	BOOM RELIEF VALVE TEST	Relief Specific:	3,000 PSI	OEM Manual	3000 PSI
	MAIN HOIST RELIEF VALVE TEST	Relief Specific:	3,065 PSI	OEM Manual	3000 PSI
	AUX HOIST RELIEF VALVE TEST	Relief Specific:	2,800 PSI	OEM Manual	2800 PSI
	SWING RELIEF VALVE TEST	Relief Specific:	1,500 PSI	OEM Manual	1500 PSI
	Measure Pressure of hoist motor case drains and Record Value Reference Bulletin: BRADEN Inspection, Testing, Preventive Maintenance and Special Operating Instructions For Planetary Hoists PB-308 latest edition for further details.			OEM Manual	
	MAIN HOIST CASE DRAIN for Gear Motor (Down Mode).	PRESSURE	< 100 psi	Company Spec/Standard	2 PSI
	AUX. HOIST CASE DRAIN for Gear Motor (Down Mode).	PRESSURE	< 100 psi	Company Spec/Standard	15 PSI
Hydraulic System	Check hydraulic tank oil level. Oil should be visible in the sight glass. Top up as required (3/4 Tank Minimum)			OEM Manual	✓ YES ( ) NO
	Check hydraulic oil condition. (Check if running hours are more than 100 hours from last oil change or during Annual inspection) ** Refer to Onsite Hydraulic Oil Sample Procedure ** ** Replace and send oil sample to SKL if abnormal ** ** Take photo of Oil Sampling for Reference**		Rando HD-68	Company Spec/Standard	✓ SEND SKL LAB ( ) NOT SEND SKL LAB
	Inspect hydraulic tank and strainer filter. Change hydraulic oil, if required with lab confirmation.			Company Spec/Standard	✓ YES ( ) NO
Hydraulic System	Drain off 1 liter of oil to remove condensed water. If water is present, drain until water is removed and top up with clean oil			Industry Standard	✓ YES ( ) NO
	Check for any hydraulic leaks			Industry Standard	✓ YES ( ) NO
	Check the hydraulic hose, piping and tubing for mechanical damage, corrosion, splits, blisters, cracking or excessive abrasion on the outer surface			API RP 2D	✓ YES ( ) NO
	Check that all hydraulic hose connections are sound and that all mounting and pivoting connections are secure.			Industry Standard	✓ YES ( ) NO
	Lubricate hydraulic swivel in pedestal and insure tie down restrains are in place and preventing the swivel from rotating with the crane structure.			OEM Manual	✓ YES ( ) NO
	Ensure the filler breather on tank is not covered or clogged			Industry Standard	✓ YES ( ) NO
	Visually inspect for missing or loose pins, pin keepers, bolts, nuts, fasteners on all pumps, motors and valves			API RP 2D	✓ YES ( ) NO
	* Re-tighten the stud bolt of hydraulic main pump and marking the nut for checking to prevent loosening. Note : Torqe spec model P76, P75, PGP/PGM350 ,PGP/PGM330 = 200 ft-lbs. , for model PGP/PGM315 = 140 ft-lbs. and PGP/PGM365 = 450 ft-lbs.			The Commercial Intertech manual	✓ YES ( ) NO
	Check the filter bypass indicator, while engine is running.			OEM Manual	✓ YES ( ) NO
	With engine running (after all other items pass inspection), check the system for leaks around fittings, hoses, valves and reservoirs			Industry Standard	✓ YES ( ) NO
	With engine running, check the source of any unusual noise or vibration that may cause or indicate equipment damage or wear			Industry Standard	✓ YES ( ) NO
	Ensure all hoses are properly rated for the system, see "Parameters" for each system for details.			Industry Standard	✓ YES ( ) NO
	Record hydraulic oil operating temperture. Note: Hydraulic fluid overheating temperature is over 180 F degrees or 82 C, degrees (reservoir temperature)			Industry Standard	120 Degree F
	Determine if hydraulic return pressure gauge is working and giving accurate measurements. Record readings				
	RECORD HYDRAULIC RETURN PRESSURE PARAMETERS:		60 PSI "maximum"	OEM Manual	20 PSI
	Check and inspect the hydraulic return filters and seals.			OEM Manual	✓ YES ( ) NO
	Function Testing and record pressures with engine at :		2,200 RPM	API RP 2D	
	BOOM FUNCTION TEST (Need Crane Mech to verify each platform)			OEM Manual	
		Cracking pressure	RECORD	OEM Manual	9000 PSI

[redacted] / 9 Mar 25

SYSTEM	TASK				Specification	Record/Reading
	Boom Angle : 60 Degree (Recommend or as applicable)	UP	Full Speed Pressure	RECORD	OEM Manual	600 PSI
		DOWN	Cracking pressure	RECORD	OEM Manual	800 PSI
			Full Speed Pressure	RECORD	OEM Manual	1800 PSI
	MAIN HOIST FUNCTION TEST (Need Crane Mech to verify each platform)				OEM Manual	
	Boom Angle : 60 Degree (Recommend or as applicable)	UP	Cracking pressure	RECORD	OEM Manual	200 PSI
			Full Speed Pressure	RECORD	OEM Manual	750 PSI
		DOWN	Cracking pressure	RECORD	OEM Manual	600 PSI
			Full Speed Pressure	RECORD	OEM Manual	1200 PSI
	AUX HOIST FUNCTION TEST (Need Crane Mech to verify each platform)				OEM Manual	
	Boom Angle : 60 Degree (Recommend or as applicable)	UP	Cracking pressure	RECORD	OEM Manual	200 PSI
			Full Speed Pressure	RECORD	OEM Manual	600 PSI
		DOWN	Cracking pressure	RECORD	OEM Manual	600 PSI
			Full Speed Pressure	RECORD	OEM Manual	1600 PSI
	SWING FUNCTION TEST (Need Crane Mech to verify each platform)				OEM Manual	
	Boom Angle : 60 Degree (Recommend or as applicable)	LEFT	Cracking pressure	RECORD	OEM Manual	200 PSI
			Full Speed Pressure	RECORD	OEM Manual	600 PSI
		RIGHT	Cracking pressure	RECORD	OEM Manual	200 PSI
			Full Speed Pressure	RECORD	OEM Manual	900 PSI
Electrical system, Crane Boom Lighting and red obstruction light	Check the electrical junction boxes, wires and connections for deterioration, desiccant bags, (replace as required)				Industry Standard	(✓) YES ( ) NO
	Check the condition of the grounding and lighting protection system.				Company Spec/Standard	(✓) YES ( ) NO
	Visually inspect boom floodlight and light guards for loose, missing, corroded				Company Spec/Standard	(✓) YES ( ) NO
	Check condition pipe support , U-bolt ,nuts of boom floodlight and Electric slipring for loose , missing , corroded				Company Spec/Standard	(✓) YES ( ) NO
	Check Electric slipring/swivel for 360° continuous rotation				OEM Munnal	(✓) YES ( ) NO
	Check Water ingress, condensation in electric slipring, red obstruction light and boom floodlight				OEM Munnal	(✓) YES ( ) NO
	Check feely movement and lubricate of boom floodlight				OEM Munnal	(✓) YES ( ) NO
	With generator in operation, intergize all lights to unsure proper function.				API RP 2D	(✓) YES ( ) NO
	Check condition of crane boom lighting and safety net is secured with strong point. * **Safety net should be replace 24 months after installation (2 year)***			Last installation date _____	Company Spec/Standard	(✓) YES ( ) NO
	Check function of crane sound signal				Company Spec/Standard	( ) YES ( ) NO (✓) N/A
	Check function of crane boom lighting at boom upper section				Company Spec/Standard	(✓) YES ( ) NO ( ) N/A
	Check function of crane boom lighting at boom lower section				Company Spec/Standard	(✓) YES ( ) NO ( ) N/A
	Check function of crane boom lighting at winch skid				Company Spec/Standard	(✓) YES ( ) NO ( ) N/A
	Check function of crane boom lighting at crane cabin				Company Spec/Standard	(✓) YES ( ) NO ( ) N/A
	Check function becon light at boom tip				Company Spec/Standard	(✓) YES ( ) NO ( ) N/A
	Inspection wire rope guide & Roller assembly				Company Spec/Standard	(✓) YES ( ) NO
	Visually inspect red obstruction light pipe support, u-bolts, nuts connection to hand rail for loose, missing, corroded				Company Spec/Standard	(✓) YES ( ) NO
	Visually inspect safety sling attached to the red obsruction light and its base for loose, missing, corroded				Company Spec/Standard	(✓) YES ( ) NO
	Visually inspect red obstruction light function. The light is designed to turn on all the time.				Company Spec/Standard	(✓) YES ( ) NO
Operator Control Station	Check general condition of control panel, bolts, paint security, etc.				API RP 2D	(✓) YES ( ) NO
	Determine if there is a serviceable fire extinguisher in the vicinity of the crane				Company Spec/Standard	(✓) YES ( ) NO
	Determine if correct load chart is in use and easily visible for operator				API RP 2D	(✓) YES ( ) NO
	Determine if charts, indicators and hand signal chart are in the cabling and firmly attached				API RP 2D	(✓) YES ( ) NO
	Determine if angle/radius indicator plate is easily visible to operator and is moving freely.				API RP 2D	(✓) YES ( ) NO
	Check condition of control levers and determine if they "dead-man" back to the neutral position.				API RP 2D	(✓) YES ( ) NO
	Check condition of pressure gauges.				API RP 2D	(✓) YES ( ) NO
	Check proper control labels are firmly installed, completely legible and properly labeled				API RP 2D	(✓) YES ( ) NO
	Check controls for freedom-of-movement				API RP 2D	(✓) YES ( ) NO
	Check condition , Leak, freely moement of Dynamic swing break system *** Note; If HYD Oil loose in CYD reservoir must be refill*				OEM Manual	(✓) YES ( ) NO
	Check condition , Leak, freely moement of Accelerate System *** Note; If HYD Oil loose in CYD reservoir must be refill*				OEM Manual	(✓) YES ( ) NO
	Check all safety glass and rubber seal for proper condition				API RP 2D	(✓) YES ( ) NO ( ) N/A
	Function Test Horn. Note;.....				Industry Standard	( ) YES ( ) NO (✓) N/A
	Ensure PRE/POST Check List and Pocket Manual in the cabin. Note;.....				Company Standard	(✓) YES ( ) NO ( ) N/A
Load Indicator System	Visual check on fittings and connections for leaks. Fix leak if any. Note;.....				OEM Manual	(✓) YES ( ) NO
	Should any leaks exist, stop leak and recharge system, refer to maintenance manual				OEM Manual	(✓) YES ( ) NO
	Change and flushing Load cell fluid.				OEM Manual	(✓) YES ( ) NO
	Check general condition of tubbing, hoses, pins bolts, paint, etc.				Industry Standard	(✓) YES ( ) NO
	Insure load cell is free of obstructions				OEM Manual	(✓) YES ( ) NO
	Check condition of gauge(s) face and clean glass as required.				OEM Manual	(✓) YES ( ) NO
	Check the scale's operation and weighing accuracy. (Main Hoist) Remark : Maximum variance +/- 2% Note;.....				Company Spec/Standard	(✓) YES ( ) NO ( ) N/A
	Check the scale's operation and weighing accuracy. (Aux. Hoist) Remark : Maximum variance +/- 2% Note;.....				Company Spec/Standard	(✓) YES ( ) NO ( ) N/A
	Check the internal casting fluid of weight indicator. top up if required				Industry Standard	(✓) YES ( ) NO ( ) N/A
	Insure SWL tag matches ratings on the Crane Load Chart.				OEM Manual	(✓) YES ( ) NO ( ) N/A
	Insure Boom Length, matches the Crane Load Chart				OEM Manual	(✓) YES ( ) NO ( ) N/A
	Insure Boom Angle measurements and readings match the boom angle indicator.				OEM Manual	(✓) YES ( ) NO ( ) N/A
	Insure Boom Radius measurements indicate the distance from center line of the crane to the hook				OEM Manual	(✓) YES ( ) NO ( ) N/A
	Check Main load cell gap 1/4 (0.250) inch				OEM Manual	(✓) YES ( ) NO ( ) N/A
	Check Aux load cell gap 3/8(0.380) inch (Compression Load Cell Type)				OEM Manual	(✓) YES ( ) NO ( ) N/A

[redacted] / 9 Mar 25

SYSTEM	TASK	Specification	Record/Reading
Pedestal & Structure	Visually check Pedestal for chipped/cracked paint, deformation, worn parts, dents, corroded areas, cracks weld, etc.	API RP 2D	(✓) YES ( ) NO
	Check water rain drain at pedestal must be not obstuct	Industry Standard	(✓) YES ( ) NO
	Check pin and cotter pin of pedestal missing , corrosion, wear, damage and exercise pin.	Industry Standard	(✓) YES ( ) NO
	Visually check Base - Plate connection and Base hoist Structure for chipped/cracked paint, deformation, worn parts, dents, corroded areas, cracks weld, etc.	API RP 2D	(✓) YES ( ) NO
	Check A fixed such as Handrial, Walkway, Grating, stationary structure without significant movement in response to waves and currents in normal operating conditions.	API RP 2C	(✓) YES ( ) NO
	Visually check and lubricate maintenance Jib. ***Note*** if on pedestal crane	OEM Manual	(✓) YES ( ) NO ( ) N/A
	Check maintenance jib is secure firmly. ***Note*** If on pedestal crane	OEM Manual	(✓) YES ( ) NO ( ) N/A
Box Boom & Luffing CYD	Check and Verify entire box boom and Boom CYD for loss of protective coating and corrosion. Note;.....	API RP 2D	(✓) YES ( ) NO
	Check and Verify entire box boom and Boom CYD for chipped/cracked paint, deformation, worn parts, dents, corroded areas, cracks, etc. Note;.....	API RP 2D	(✓) YES ( ) NO
	Check and Verify boom end connections, for bends, dents, corroded areas, cracked welds, and signs of mechanical damage, wear, etc. **any deviation should be reported**	API RP 2D	(✓) YES ( ) NO
	Check and Verify boom rest and wooden support to ensure it's in good condition	API RP 2D	(✓) YES ( ) NO
	Inspect pin and pin holes of Upper tank and Lower tank for excessive clearance	OEM Manual	(✓) YES ( ) NO
	BOOM CYLINDER PIN MAXIMUM TOLERANCE — 0.125 Inch (3mm)	Industry Standard	As found 0.125
	Check BOOM CYLINDERS for proper operation and good condition	API RP 2D	(✓) YES ( ) NO
	Check Boom cylinder barrels and rods for leaks, mechanical damage and corrosion	Industry Standard	(✓) YES ( ) NO
	Check and measurement boom foot pin and connection pins for clearance	Industry Standard	
	BOOM FOOT PINS & BOOM BOX CONNECTER PIN TOLERANCE — 0.125 Inch (3mm)	Industry Standard	0.120
	Boom Foot Pin Tolerance	Industry Standard	0.082 inch
	Boom Box Connecter Pin Tolerance	Industry Standard	0.094 inch
	Check connecting bolts of box boom loose, corrosion, wear, damage	OEM Manual	(✓) YES ( ) NO
	Lubricate boom foot pins and bushings	OEM Manual	(✓) YES ( ) NO
	Lubricate boom cylinder pins, bearings and bushings	OEM Manual	(✓) YES ( ) NO
	Boom function test angle/radius to correction **Note; The cylinder(s) mechanism shall be capable of elevating the boom from a minimum of zero degrees to the maximum recommended boom angle.	API RP 2C	(✓) YES ( ) NO
	Operation functional test and verify Boom Creeping down **Note ; Test at angle 60°	Industry Standard	(✓) YES ( ) NO As found.....
Wire Rope	Determine if parts-of-line match parts of line on the load chart in the crane cabin.	API RP 2D	(✓) YES ( ) NO
	Determine if visible portion of wire rope adequately lubricated. If not lubricate wire rope	API RP 2D	(✓) YES ( ) NO
	For each layer of wire rope on drum, check that all rope is parallel and each crossover point at hoist flanges is correct	API RP 2D	(✓) YES ( ) NO
	The top layer of rope must not be lower to the flange tips 2.5 in for Smooth drum,2 in for groove drum or 2.5 times of wire rope diameter	API RP 2C	(✓) YES ( ) NO
	Inspect wire rope for, kinking, crushing, broken wires, necking down of rope diameter, worn outside wires, corroded or broken wires at end connection, cutting or unstringing.	API RP 2D	(✓) YES ( ) NO As found good
	NoteRunning Ropes of rotation-resistant construction used in the main or auxiliary Hoist: - Four (4) Randomly distributed broken wires within 30 rope diameter - Two (2) broken wires in one stand within 6 rope diameter	API RP2D Edition 7	(✓) YES ( ) NO As found good
	One valley break can indicate internal rope damage requiring close inspection of this section of the rope. When one or more valley breaks are found in one lay length the rope should be retired.	API RP2D Edition 7	(✓) YES ( ) NO As found good
	Reductions for the rope diameter, from initial wire rope dimensional measurements, in a nonworking area (an area away from the sheaves) compared to the lowest diameter of rope measured in three working areas (areas where the rope regularly goes over a sheave) of more than the following is observed: — 3/64 in. (0.047 in.) (1.2 mm) for diameters up to and including 3/4 in. (19.1 mm); — 1/16 in. (0.062 in.) (1.6 mm) for diameters of 7/8 in. to 1-1/8 in. (22.2 mm to 28.6 mm); — 3/32 in. (0.093 in.) (0.8 mm) for diameter of 1-1/4 in. to 1-1/2 in. (31.8 mm to 38.1 mm); — For rope diameters greater than 1-1/2 in., a 5 % diameter loss from baseline measurement. —Wear of one-third the original diameter of the outside individual wires.	API RP2D Edition 7	(✓) YES ( ) NO As found dimension good
	Increase in the length of an individual rope lay is observed. This increase in lay length and accompanying reduction in diameter can be caused by failure of the core. This can occur more readily in ropes or rotation-resistant construction.	API RP2D Edition 7	(✓) YES ( ) NO As found good
	-Inspection and Verify running and standing rope from heat effect **Note; Not more than 250°C -There is evidence of heat damage from any source (i.e. engine exhaust, flare towers, stress corrosion cracking, etc.). Heat can be generated by passing a rope over a frozen or non-turning sheave, contact with structural members of the crane, improperly grounded welding leads or lightning strikes	Industry Standard	(✓) YES ( ) NO As found good
	With the boom at the highest possible angle and the main load block or overhaul ball at the water level, ensure there is a minimum of 5 wraps of wire-rope remaining on the drums. Note: (Thai law, requires minimum of 2 wraps)	API SPEC 2C / Thai Law	(✓) YES ( ) NO
	Reference: - Running rope safety factor not less than 6 for wire rope that are running wire, (Thai law; Wire rope nominal breaking strength x number parts of line / Design factor 6) - Standing rope safety factor not less than 3.5 for wire rope that are stay cables, (Thai law)	Thai Law	(✓) YES ( ) NO ( ) N/A
	Measure and record nominal diameter of "running ropes"main and auxiliary (particularly on drum, equalizer sheave and at sockets, clips and dead end points) *****Nominal = several measurements added together divided by Number of measurements*****	API RP 2D	(✓) YES ( ) NO
	Inspect wire rope and record dimension.	API RP 2D	
	MAIN WIRE ROPE OD: — FULL DRUM	OEM Manual	0.697 inch
	MAIN WIRE ROPE OD: — HALF DRUM	OEM Manual	0.696 inch
	MAIN WIRE ROPE OD: — WATER LEVEL	OEM Manual	0.694 inch
	AUX WIRE ROPE OD: — FULL DRUM	OEM Manual	0.695 inch
	AUX WIRE ROPE OD: — HALF DRUM	OEM Manual	0.697 inch
	AUX WIRE ROPE OD: — WATER LEVEL	OEM Manual	0.698 inch
	Slip-Cut 1 meter of all ropes at the wedge socket and re-wedge to prevent rust inside of wedge socket (at outward end of rope, not on hoist drum) Dead end tail length is never less than 6 inches, or: - Standard 6 to 8 Strand wire rope is not less than 7 times the rope diameter - Rotation Resistant Wire Rope is not less than 20 times the rope diameter	Company Spec/Standard	( ) YES ( ) NO

[redacted] / 9 Mar 25

SYSTEM	TASK	Specification	Record/Reading
	U-bolt and Fist Grip Clips: Extreme care should be exercised to assure proper orientation of U-bolt clips. The U-bolt segment shall be in contact with the wire rope dead-end. The orientation, spacing, torquing, and number of all clips shall be in accordance with the crane manufacture's specifications.	API SPEC 2C	(✓) YES ( ) NO
	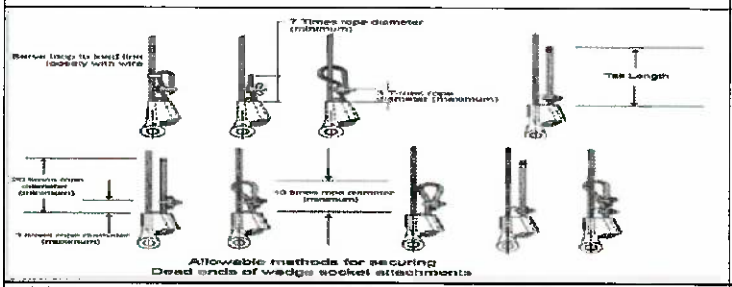	API SPEC 2C	Model and Size wedge socket. Main hoist. Model.....mckissick Size.....5/8" Aux Hoist. Model.....mckissick Size.....5/8"
	Verify that the wedge socket and wedge are the correct size for the rope in use and record the size	API SPEC 2C	(✓) YES ( ) NO
Sheaves & Bearings	Lubricate all sheave bearings.	API RP 2D	(✓) YES ( ) NO
	Visually inspect all sheaves and bushings for cracks, wear and deterioration	API RP 2D	(✓) YES ( ) NO As found.....good
	Visually inspect wire rope track of sheave for rope imprints, wear and deterioration. If damage exist sheave should be resurfaced or replaced.	API RP 2D	(✓) YES ( ) NO As found.....good
	Pins retained by snap rings, bolt lock shafts, plates lock should be checked for missing or loose for all	API RP 2D	(✓) YES ( ) NO
	Check wirerope guards and keepers for proper location and condition.	API RP 2D	(✓) YES ( ) NO
	Determine if wire rope is jumping the sheaves, by looking for signs of damage on the sheave brim	Industry Standard	(✓) YES ( ) NO
	Sheave Rope Profile for optimum Rope life the sheave groove profile should be correctly matched to the rope diameter	Industry Standard	(✓) YES ( ) NO
	Check rope sheave should be machine grooved to adepth of not less than 1.5 times the norminal diameter of the rope	Industry Standard	(✓) YES ( ) NO
	MAIN POINT SHEAVES: Note;.....	Industry Standard	No.1 (✓) YES ( ) NO No.2 (✓) YES ( ) NO
	AUX SHEAVES: Note;.....	Industry Standard	No.1 (✓) YES ( ) NO
	IDLER SHEAVES: Note;.....	Industry Standard	AUX. (✓) YES ( ) NO Main (✓) YES ( ) NO
	Pins for bronze bushing and straight roller bearing should have a running clearnace of .031 inch/ sheave of end play and should be adjusted accordingly.(count from left)	Industry Standard	(✓) YES ( ) NO
	MAIN POINT SHEAVES:	Industry Standard	Sheave No.1.....18..... inch Sheave No.2.....18..... inch
	AUX SHEAVES:	Industry Standard	Sheave No.1.....18..... inch
	IDLER SHEAVES:	Industry Standard	Sheave AUX.....18..... inch. Sheave Main.....18..... inch.
	Ensure the sheaves are aligned and the fleet angle is correct **Remark ; Wire rope User's Manual allows 2 degree on grooved winch drum, Smooth Drum should be not more than 1-1/2 degree	API RP 2D	(✓) YES ( ) NO
	Determine if wire rope size and sheave sizes/grooves are compatible and record size. Sheave pitch diameter (D) to nominal wire rope diameter (d) ratio (D/d) shall not be less than 18:1	API SPEC 2C	( ) YES ( ) NO
	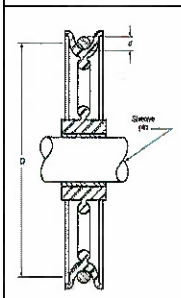 MAIN POINT SHEAVES: SHEAVE D / WIRE ROPE d = >18	API SPEC 2C	18 inch (D) 0.625 inch (d) 18 (Ratio D/d)
	AUX SHEAVES: SHEAVE D / WIRE ROPE d = >18	API SPEC 2C	14 inch (D) 0.625 inch (d) 22 (Ratio D/d)
	IDLER SHEAVES: SHEAVE D / WIRE ROPE d = > 18 (if applicable)	API SPEC 2C	18 inch (D) 0.625 inch (d) 28 (Ratio D/d)
	MAIN BLOCK SHEAVES: SHEAVE D / WIRE ROPE d = > 16	API SPEC 2C	16 inch (D) 0.625 inch (d) 25 (Ratio D/d)
Load Block	Load Block: Check the load block for cleanliness, binding sheaves, damaged or worn sheaves, worn or distorted sheave pins, broken bolts, and worn cheek weights. Note ;.....	Industry Standard	(✓) YES ( ) NO As found.....good
	Hook: Check the hook damage, excessive wear to the hook safety latch, hook swivel trunnions, thrust collar, securing, damage or missing lubrication fittings, proper lubrication, cracks and gouges, and if visibly bent or twisted or has been exposed to welding or arching. Note ;.....	Industry Standard	(✓) YES ( ) NO As found.....good
	Hook: Tip has been bent more than 10 degree out of plane from the hook body	Industry Standard/API RP2D7	(✓) YES ( ) NO As found.....good
	Inspect the Pins for bronze bushing and straight roller bearing should have a running clearnace of .031 inch/ sheave of end play and should be adjusted accordingly	Industry Standard	(✓) YES ( ) NO
	Inspect Hook or shackle to swivel case clearance is set at .031 to .062 inch, Clearance exceeding .12 to .18 (ONLY CROSBY BRAND)	OEM Crosby	(✓) YES ( ) NO
	OEM STANDARD RECOMMEND that Crane block removal from service untill replaced and repair following below	OEM STANDARD	

[redacted] / 9 Mar 25

SYSTEM	TASK	Specification	Record/Reading
	- Elongated center pin and hook trunnion holes exceeding 5% of Original diameter	OEM STANDARD	(✓) YES ( ) NO As found good
	-Material loss due to wear exceeding 10% of original section	OEM STANDARD	(✓) YES ( ) NO As found good
	-Sheave wire rop groove diameter smaller than 2.5%	OEM STANDARD	(✓) YES ( ) NO As found good
	Loosened tie bolts nuts, center pin round nuts, check weight cap screws and hook nut cap screws. Tie bolt nuts to be torqued to 35-40 ft.Lbs and restaked, all other fasteners wrench tight	OEM STANDARD	(✓) YES ( ) NO
	Throat opening - any distortion causeing an increase in throat opening of 5% not ot exceed 1/4 in. (6 mm.)(or as recommended by the manufacturer)	ASME B30.10	(✓) YES ( ) NO
	Inspect rope track worn in sheave groove, sheave must be resurface or replace	API RP 2D	(✓) YES ( ) NO
	Ensure the load block is not using "Cast Iron" cheek weights they can not be used as per API	API SPEC 2C	(✓) YES ( ) NO As found
	Determine if all hooks are equipped with properly operating safety latches and check for proper functioning	API RP 2D	(✓) YES ( ) NO
	Lubricate sheave bearings and swivels	OEM Manual	(✓) YES ( ) NO
	Re-thighten nut firmly to point at which trunion will just rotate, the Re-tighten set-screw in nut and thread condition as in the picture below,	Industry Standard	(✓) YES ( ) NO
	Last NDE inspection record	Industry Standard	Last inspect date
	RECORD LOAD BLOCK INFORMATION : Manufacturer:	OEM Manual	McKissick
	Model:	OEM Manual	MB250LBH
	Serial Number:	OEM Manual	0640889
	Record Load block measurements and details for future comparison with historical data	Industry Standard	( ) YES ( ) NO
	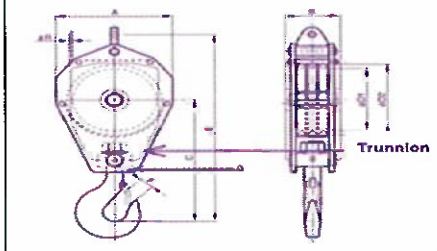 A - Block OD	Industry Standard	19½ mm/ inch
	B - Block length	Industry Standard	13 mm/ inch
	C - Center of Pin to hook Saddle	Industry Standard	25½ mm/ inch
	D1 - Sheave Diameter	Industry Standard	16 mm/ inch
	E - Block Width	Industry Standard	3⅜ mm/ inch
	F - Throat Opening	Industry Standard	5 mm/ inch
	G - Trunnion	Industry Standard	0.0625 mm/ inch
Aux. Ball	Inspect Auxiliary ball for cleanliness, binding swivel, work pad-eye hole. Inspect the hook damage, excessive wear to the hook safety latch, Bent connector plates,Severe corrosion pitting, hook swivel trunnions, thrust collar, securing, damage or missing lubrication fittings,Loose, missing or damaged retaining nuts, cotter pins or swivel set screws ,Missing or illegible rating and warning tags, proper lubrication, cracks and gouges, and if visibly bent or twisted or has been exposed to welding or arching.	Industry Standard	(✓) YES ( ) NO
	Hook: Tip has been bent more than 10 degree out of plane from the hook body	Industry Standard/API RP2D7	(✓) YES ( ) NO
	OEM STANDARD recommend that Crane overhaul ball removal from service untill replaced and repair following below	OEM STANDARD	
	- Elongated ball pin holes, hook latch pin holes and swivel eye exceeding 5% of original diameter,	OEM STANDARD	(✓) YES ( ) NO As found good
	-Swivel end play gap exceeding .08". Excessive end play indicates damaged internal set screw	OEM STANDARD	(✓) YES ( ) NO As found good
	-Material loss due to wear exceeding 10% of original section	OEM STANDARD	(✓) YES ( ) NO As found good
	Throat opening - any distortion causeing an increase in throat opening of 5% not ot exceed 1/4 in. (6 mm.)(or as recommended by the manufacturer)	ASME B30.10	(✓) YES ( ) NO
	All hooks that lift personnel are to have a positive locking safety latch **locking Pin to be used while lifting personnel**	API RP 2D	(✓) YES ( ) NO
	*** Temperature Effected : When hooks are to be used at temperature above 400° F. (204°C) or below -40°F (-40°C), the hook manufacturer or a qualified person should be consulted *** Chemically Active Environment : The strength of hooks can be affected by chemically active environments, such as caustic or acid substances or fumes. The hook manufacturer or qualified person should be consulted before hooks are used in chemically active environment	ASME B30.10	
	Verify to ensure nut firmly at which trunion rotate. Identify to set-screw in nut/ swivel/ counter pin and thread condition.	Industry Standard	(✓) YES ( ) NO
	Last NDE inspection record	Industry Standard	Last inspect date
	RECORD AUX BALL INFORMATION : Manufacturer:	OEM Manual	McKissick
	Model:	OEM Manual	MB07T200D
	Serial Number:	OEM Manual	0641198
	Record Auxiliary Ball measurements and details for future comparison with historical data: For Model MB07T200E ONLY	Industry Standard	
	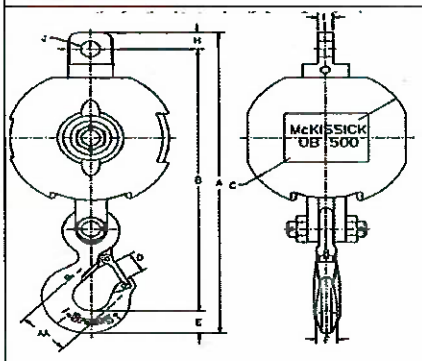 AA Dimensions 3.0 Inch	Industry Standard	3.0 mm/ inch
	A Dimensions 24.89 Inch	Industry Standard	24.89 mm/ inch
	B Dimensions 21.71 Inch	Industry Standard	21.71 mm/ inch
	C Dimensions 12.50 Inch	Industry Standard	12.50 mm/ inch
	D Dimensions 1.61 Inch	Industry Standard	1.61 mm/ inch
	E Dimensions 1.81 Inch	Industry Standard	1.81 mm/ inch
	F Dimensions 1.38 Inch	Industry Standard	1.38 mm/ inch
	H Dimensions 1.38 Inch	Industry Standard	1.38 mm/ inch
	I Dimensions 0.88 Inch	Industry Standard	0.88 mm/ inch
	J Dimensions 1.31 Inch	Industry Standard	1.31 mm/ inch
Safety system	Check Condition anti - two block , hanging chain ,eye bolts , fix bolts , shackle for missing , corrosion , erosion , deformation	API RP 2D	( ) YES ( ) NO

[redacted] / 9 Mar 25

SYSTEM	TASK		Specification	Record/Reading
	Check anti - two block kick out plate for freely movement		Company Spec/Standard	(✓) YES ( ) NO
	Check anti-2-block device proper function of Main winch		Company Spec/Standard	(✓) Function ( ) False
	Check anti-2-block device proper function of Aux. winch		Company Spec/Standard	(✓) Function ( ) False
	Check relation of boom radius and boom angle (lowest, middle, highest) with refrence to load chart. Recharge fluid W-15 to load indicator, if required.		API RP 2D	(✓) YES ( ) NO
	Functional test of emergency lowering system (See procedure in Emergency Load Lowering Box). Note: Keep for 1 Yr PM to sustain crane mechanic competency. Caution: Function test must be performed on top deck with max 2-foot height.		Company Spec/Standard	( ) YES ( ) NO (✓) N/A
	Visually check emergency load lowering kit. Ensure EMERGENCY LOWERING PROCEDURE and MATERIAL LIST are in the box. - Ensure ALL items shown on the list are in the box and in good condition - SECURE THE BOX WITH A TIE WRAP.		Company Spec/Standard	( ) YES ( ) NO (✓) N/A
Slew Mechanism	Visually check for damage and excessive wear on gear teeth		OEM Manual	(✓) YES ( ) NO
	Visually check slew gear box in the area of oil seal for any leaks		API RP 2D	(✓) YES ( ) NO
	RECORD SLEW GEAR BOX INFORMATION :	Manufacturer:	OEM Manual	ESKI
		Model:	OEM Manual	250 AU124-G1
		Serial Number:	OEM Manual	
	CHECK and RE-TORQUE swing drive gearbox mounting bolts at following brands: - ESKRIDGE, Model: 250 = 150 FT-LBS		API RP 2D	(✓) Yes ( ) No
	Check swing gearbox oil level/condition, top up if required	Meropa 220	OEM Manual	(✓) YES ( ) NO
	Monitor slew gearbox oil condition by visually examine for burnt smell, metal particles, and/or other contaminants, record and change if found.	Meropa 220	OEM Manual	(✓) CHANGE OIL (✓) NOT CHANGE OIL
	Change slew gear box oil	Meropa 220	OEM Manual	(✓) CHANGE OIL ( ) NOT CHANGE OIL
	Grease all pivot points of slew ring (bearing)		OEM Manual	(✓) YES ( ) NO
	Grease open gears (pinion)		OEM Manual	(✓) YES ( ) NO
	Rotate crane 360 degree and check smoothness of operation		OEM Manual	(✓) YES ( ) NO
	Check swing drive static parking brake for proper operation Caution: DO NOT stop the swing of the crane with this static brake (parking brake)		OEM Manual	(✓) YES ( ) NO
	Check swing drive dynamic parking brake for proper operation		OEM Manual	(✓) YES ( ) NO
	Check swing lock mechanism condition; corrosion ,dent , loos all part,worn and wear		OEM Manual	(✓) YES ( ) NO As found condition...good...
	Check swing lock mechanism freely lock and unlock for function. **Check and inspect for hydraulic for leaks on actuator model.**		OEM Manual	(✓) YES ( ) NO As found condition...good...
	Check condition of slew ring bolts e.g. Bolt grade and washers. Caution: Use only hardened flat washers under head of bolt. Do not use lock washers, or regular flat washers.		Industry Standard	(✓) YES ( ) NO As found condition...good...
	Monitor ball-ring grease sample. If found wear and tear particles, take sample and send to lab. ***Wear assessment by grease sample analysis—wear may be monitored by periodic grease sample analysis as describe in this section. Grease samples should be collected every twelve months as a minimum and the results of the analysis recorded; this period should be shortened if obvious metal or contaminants are present.		API PR 2D	( ) SEND TO LAB (✓) NOT SEND TO LAB As found.....
	Verify crane condition and load test as separate procedure.		API 2C	(✓) YES ( ) NO Specific test load.....lbs.
	Verify crane condition and load test as separate procedure. " Record crane load test in load test form."		Company Standard	(✓) YES ( ) NO

Table 1—Static/Onboard Test Load and Radius

Static/Onboard Rated Load at a Specific Radius lb (kg)	Test Loads in Excess of Static/Onboard Rated Load at a Specific Radius
≤ 40,000 (18,144)	25 %
> 40,000 ≤ 100,000 (>18,144 ≤ 45,356)	10,000 lb (4536 kg)
> 100,000 (45,356)	10 %

Risk Level Definitions: The following 3 levels indicate the impact the noted deficiency poses to the operation or structural integrity of the equipment:

Level 1 = Incidental	Level #2 = Restricted Operation	Level #3 =Out of Service
Minor deficiency that is recommended to be promptly addressed, but poses no safety and/or environmental risk. The crane can still be operated at full duty.	Deficiency identified that has the potential to limit, de-rate or damage the crane, its surroundings and/or the environment. The duty and locked/ tagged out until the crane's duty and operation should be de-rated or service restricted.	The crane should be removed from duty and locked/ tagged out until the deficiency is rectified.

System:	Risk Level:	Component:		In Accordance with:	
		Location:		Date Originated:	
Description:					
Recommended Action:					
Recommended urgency timeframe for corrective action:			Completed Date:	Completed By:	

System:	Risk Level:	Component:		In Accordance with:	
		Location:		Date Originated:	
Description:					
Recommended Action:					
Recommended urgency timeframe for corrective action:			Completed Date:	Completed By:	

System:	Risk Level:	Component:		In Accordance with:	

[redacted] / 9 Mar 25

SYSTEM	TASK			Specification		Record/Reading
	Location:			Date Originated:		
Description:						
Recommended Action:						
Recommended urgency timeframe for corrective action:			Completed Date:		Completed By:	

System:	Risk Level:	Component:		In Accordance with:	
		Location:		Date Originated:	
Description:					
Recommended Action:					
Recommended urgency timeframe for corrective action:			Completed Date:		Completed By:

System:	Risk Level:	Component:		In Accordance with:	
		Location:		Date Originated:	
Description:					
Recommended Action:					
Recommended urgency timeframe for corrective action:			Completed Date:		Completed By:

System:	Risk Level:	Component:		In Accordance with:	
		Location:		Date Originated:	
Description:					
Recommended Action:					
Recommended urgency timeframe for corrective action:			Completed Date:		Completed By:

Done by 8/3/25

[redacted]

THE PEDESTAL CRANE CONDITION VERIFICATION

Date : 7 - Mar 25			
Crane Owner : CTEP/ COTL Field: Benchamas Platform/ Vessel: SRNB			
Crane Owner 's representative : (Mech Supv./ M'De[redacted]			
Qualified inspector : (Qualified Crane Mechanic) [redacted]			
Inspector 's company / agency : (Third Party or Outsource to witness if applicable)			
Manufacture NIL Fabrication by OIL States Year of Fabrication Nov 2006 Country Louisiana 70363 Model / Serial 180B1 -80 CMS) 22006 C Standard API Edition Sixth Edition			Remark
Safe Working Load (SWL) —> OEM	14.52 Metric Tonnes		
Safe Working Load (SWL) —> Existing via MOC, if applicable	– Metric Tonnes		
Boom length, Main	80 Ft		
Boom length, Auxiliary if applicable	– Ft		
Part of line main hoist	4 Part line		
Part of line auxiliary hoist	1 Part line		
Safe Working Load at longest boom radius	80 ft	7293 Metric Tonnes/ Lbs	
Safe Working Load at shortest boom radius	13 ft	32019 Metric Tonnes/ Lbs	
The document of crane specification for Testing , Maintenance and Inspection are provided by:	OEM	MOC / Crane Engineer	
Has the crane ever been modified by MOC ? (To verify if this crane is modified with MOC –> Allow to test the crane. If this crane is modifed without MOC –> Not allow to test the crane)	YES	NO	(Employers are not allowed to modify or adjust any part of cranes or dericks or consent to other persons to do these things, that might reduce the safety of the employees who work with the cranes or derricks).
Does the rotating part have proper guard in place?	YES	NO	(Need mitigation plan)
Is the ladder and hand rail in place?	YES	NO	(Need mitigation plan)
Is the maintenance platform in place?	YES	NO	(Need mitigation plan)
Is the SWL tag labelled on crane pedestal, main block or aux ball?	YES	NO	(Need mitigation plan)
Verify if the crane major component damaged or not	YES (Need to repair or mitigate unsafe condition with MOC before testing)	NO	(Employers shall not allow employees work with damaged/ unsafe cranes or derricks)
Inspect boom end connections, for bends, dents, corroded areas, cracked welds, and signs of mechanical damage, wear, etc. **any deviation should be reported** Level 1 = Incidental : Minor deficiency that is recommended to be promptly addressed, but poses no safety and/or environmental risk. The crane can still be operated at full duty. –> Allow to test Level #2 = Restricted Operation: Deficiency identified that has the potential to limit, de-rate or damage the crane, its surroundings and/or the environment. The duty and locked/ tagged out until the crane's duty and operation should be de-rated or service restricted. –> To be derated Level #3 = Out of Service;The crane should be removed from duty and locked/ tagged out until the deficiency is rectified. –> Not Use	YES (To be verified)	NO	
Function Load Testing			
1. Verify Crane SWL (Existing)	3.0 Metric Tonnes		
2. Verify routine maximum actual load.	2.4 Metric Tonnes		
3. Select the specimen load to be more than actual routine load 1.25 times but not more than SWL. Example # 1 : Crane 's SWL is 18 Metric Tonnes. The routine maximum actual load is 2.4 Metric Tonnes. Therefore, the load testing shall be 2.4 x 1.25 = 3 Metric Tonnes. Example # 2 : Crane 's SWL is 18 Metric Tonnes. The routine maximum actual load is 16 Metric Tonnes. By calculation, the load testing is 16 x 1.25 = 20 Metric Tonnes more than SWL (18 MTon). **Therefore, the load testing shall be 18 Metric Tonnes equal to SWL.**	3.0 Metric Tonnes		
4. Use Auxiliary Winch if specimen load less than or equal 3 Metric Tonne	YES	NO	
5.Use Main Winch if specimen load more than 3 Metric Tonne	YES	NO	
6. The record of load testing : Fill in "Function Test Record" sheet attached.			

RECORDED FUNCTION TEST PROCEDURE

1. CHECK AND RECORD READING RADIUS AND BOOM INDICATIOR AT FOUR (4) VALUES INCLUDING MAXIMUM AND MINIMUM.

(ALL REDIUS MEASUREMENT ARE TO BE TEKEN FROM THE CENTERLINE OF CRANE ROTATION)

ACTUAL	INDICATED RADIUS (FT)
A) 15' (MINIMUM)	15
B) 20'	20
C) 25'	25
D) 30' (INTERMIDIATE)	30
E) 40'	40
F) 50' (INTERMIDIATE)	50
G) 60'	60
H) 75' (MAXIMUM)	75

2. CHECK AND RECORD READING ON BOOM ANGLE / DEGREES.

SPECIFICATION		INDICATED BOOM ANGLE (DEGREES)
1). MAXIMUM.	81 DEGREES	81
2). INTERMEDIATE.	60 DEGREES	60
3). INTERMEDIATE.	45 DEGREES	45
4). MINIMUM.	0 DEGREES	0

3. READING ON LOAD INDICATOR WITHOUT SLINGS OR LOAD / LBS. (LOAD BLOCK + WIRE ROPE)

ACTUAL		INDICATOR READ FREE LOAD, (LBS)
1). MAXIMUM RADIUS	735 LBS.	800
2). MINIMUM RADIUS	735 LBS,	1100

4. CHECK AND RECORD ENGINE HIGH IDLE SPEED / RPM.

SPECIFICATION		INDICATED OF FUNCTIONAL (RPM)
1). IDLE SPEED	800 RPM	850
2). LOW SPEED	– RPM	–
3). HIGH SPEED	2200 RPM	2200

5. FUNTIONALLY TEST THE FOLLOWING.

ACTUAL	INDICATED OF FUNCTIONAL (TESTED)
A) MAIN HOIST ANTI -TWO BLOCK.	Function
B) AUXILIALY HOIST ANTI -TWO BLOCK.	Function
C) HIGH BOOM ANGLE KICK OUT.	N/A
D) LOW BOOM ANGLE KICK OUT.	N/A
E) PRIME MOVER SHUTDOWN.	Function
F) EMERGENCY SHUTDOWN.	Function
G) ROTATE CRANE 360 LEFT.	Good
H) ROTATE CRANE 360 RIGHT.	Good

6. RECORD HYDRAULIC RELIEF VALVE PRESSURE SETTING ON FOLLOWING HYDRAULIC FUNCTION:

SPECIFICATION		INDICATED PRESSURE (PSI)
A) MAIN HOIST	3000 PSI.	3000
B) AUXILIALY HOIST	2800 PSI.	2800
C) BOOM HOIST	3000 PSI.	3000

TEST CONDUCTED BY [redacted] POSITION : CR-MECH

CRANE OPERATOR : [redacted] POSITION : CR-MECH

COMMENTS : DATE :

CRANE Mfg. : Nautilus
MODEL: 180B1HD-80 (MS)
SERIAL NUMBER : Crane Specific

LOCATION: C2 / BEWS ,BEWY ,LAWB ,LAWC ,MAWE

DATA BASE - PM JOB TASK CARD

Crew Size:
Estimated Hours:

SYSTEM	TASK		Specification	Record/Reading
	JOB PREPARATION			
Safety	Perform Job Safety Analysis (JSA)		Company Spec/Standard	(✓) YES ( ) NO
	Obtain "COMPANY" PERMIT TO WORK		Company Spec/Standard	(✓) YES ( ) NO
	Perform Tool Box Talk		Company Spec/Standard	(✓) YES ( ) NO
	BEFORE/AFTER JOB EXECUTION: Ensure to comply with isolation procedure (LOCK OUT/TAG OUT, WARNING SIGNS and BARRIERS).		Company Spec/Standard	(✓) YES ( ) NO
Required Tools	Insure proper tools are available at the job site		Company Spec/Standard	(✓) YES ( ) NO
	Tool bag		Company Spec/Standard	(✓) YES ( ) NO
	Tool box		Company Spec/Standard	(✓) YES ( ) NO
	Tool Container		Company Spec/Standard	(✓) YES ( ) NO
	MPI equipment and operator		Company Spec/Standard	( ) YES (✓) NO
	Check safety harness Software and Hardware should be good condition before use		Company Spec/Standard	(✓) YES ( ) NO
	Check Rescue Equipment ready to use onsite		Company Spec/Standard	(✓) YES ( ) NO
	Portable Scaffolding and Crew if require		Company Spec/Standard	(✓) YES ( ) NO
Lubricants	Insure proper lubricants and consumables are available at the job site.		Company Spec/Standard	(✓) YES ( ) NO
	Hydraulic System - Hydraulic Oil	Rando HD-68	OEM Manual	(✓) YES ( ) NO
	Slew Gearbox - Gear Oil	Meropa 220	OEM Manual	(✓) YES ( ) NO
	Auxiliary Hoist - Gear Oil	Meropa 220	OEM Manual	(✓) YES ( ) NO
	Main Hoist - Gear Oil	Meropa 220	OEM Manual	(✓) YES ( ) NO
	Grease Points - Lithium Based **IT MUST NOT INCLUDE MOLYBDENUM DISULPHIDE**	MULTIFAK EP#2	OEM Manual	(✓) YES ( ) NO
	Open Gear Teeth - Open Gear Lube highly water resistant and of an adhesive nature.	OMEGA 73	OEM Manual	(✓) YES ( ) NO
	Pneumatic Lubricator	SAE Grade 10	OEM Manual	(✓) YES ( ) NO
	Wire rope Lubricant Company preferred grade	Birlube 70	OEM Manual	(✓) YES ( ) NO
	Engine Oil - SAE Grade 15W-40 (Delo Gold)	15W-40	OEM Manual	(✓) YES ( ) NO
	Safe Load Indicator fluid	W-15	OEM Manual	(✓) YES ( ) NO
	Engine Radiator - Should have radiator preservatives additives	Cat® SCA	OEM Manual	(✓) YES ( ) NO
Consumables	Spray Cold Galvanize		Company Spec/Standard	(✓) YES ( ) NO
	Denso Tape		Company Spec/Standard	(✓) YES ( ) NO
	WD-40		Company Spec/Standard	(✓) YES ( ) NO
History Review	Before starting work, tasks preparation at least 1 day prior to starting work: 1. Review history PM/ CM from Roving Team, 2. Review last PM/ CM/ PMI from Crane Mech, 3. List out all punch list and prepare parts. 4. Review last Certificate task performed		API RP 2D	(✓) YES ( ) NO
	Require to update part history from Crane Mech on following main compenents to ensure the right parts are prepared: - Aux/ Main/ Boom Cylinder, Engine, Swing Gearbox, etc. Reference: Crane OEM Information of each part need to be recorded - Manufacturer & Contact Info - Model & serial number - Installation date		Company Spec/Standard	(✓) YES ( ) NO
	Review history data from Certificates and incorporate into current PM: - Pull Test Certificates (ongoing update, 4 yr. history). - Load Test Certificates (ongoing update, 4 yr. history). - Wire Rope Certifications (running rope and standing rope) (life of rope). - Hoist Certifications for hoist classified as "personnel handling" hoist.		API RP 2D	(✓) YES ( ) NO
	Review Last Preventative Maintenance Records (Inspection Reports) - Pre-use (Pre-Post Inspection) - 6 Monthly (API RP 2D Not Defined, Company Standard) - 1 Yearly (API RP 2D Defined Annual Inspection)		API RP 2D	(✓) YES ( ) NO
Lifting Gear Preparation	Visually Inspect (Sling, sling hooks and shackles) include Websling / Chain		Company Spec/Standard	(✓) YES ( ) NO
	Check color code / Tag & date Inspection		Company Spec/Standard	(✓) YES ( ) NO
	PM JOB STARTING			
General	Determine if access route to-from crane is clean, safe, unobstructed and adequately protected against falls, tripping and slipping		Company Spec/Standard	(✓) YES ( ) NO
	Check drain lines and drip pans for deterioration		API RP 2D	(✓) YES ( ) NO
	Remove any sediment collected in the bottom of drip pans		Industry Standard	(✓) YES ( ) NO
	Check for general crane and components for loss of protective coating and corrosion		Industry Standard	(✓) YES ( ) NO
	Check for missing or loose ,corrosion, deformation pins, pin keepers, bolts, nuts, fasteners of all laders, cages and working platform		API RP 2D	(✓) YES ( ) NO
	Apply grease to exposed grease parts (control valve spools, ball-ring gear, parking brake valve, etc.)		OEM Manual	(✓) YES ( ) NO
Prime Mover	Engine CUMMIN		OEM Manual	(✓) YES ( ) NO
	CUMMIN Model : C8.3	S/N.:	OEM Manual	_____
		AR.No.:	OEM Manual	_____
	Change engine lube oil & oil filter and check the condition of old oil. As found ; Normal		OEM Manual	(✓) YES ( ) NO
	Check diesel tank level, top up if required.		OEM Manual	(✓) YES ( ) NO
	Check / Clean crankcase breather cap. Change if required		OEM Manual	(✓) YES ( ) NO
	Check / Clean air cleaner filter, Replace if require. (Note : Include inspect air cleaner housing)		OEM Manual	(✓) YES ( ) NO
	Check condition and inspect of the radiator and cap.		OEM Manual	(✓) YES ( ) NO
	Check for any signs of leaks on or around the engine ie; Crankshaft seal for front & rear seal , Engine oil cooler. As found: Normal		OEM Manual	(✓) YES ( ) NO
	Check condition exhaust system for leaks, corrosion, insulation and general. As found ; Normal		OEM Manual	(✓) YES ( ) NO
	Check condition of all engie hoses and tube. (Fuel supply,Cooling system and Lube oil system. As found: Normal		OEM Manual	(✓) YES ( ) NO
	Drain water and sediment form diesel tank As found ; Good		OEM Manual	(✓) YES ( ) NO
	Check / Clean Diesel tank level sightglass and diesel tag.		OEM Manual	(✓) YES ( ) NO
	Apply grease of fan bearing/shaft.		OEM Manual	(✓) YES ( ) NO
	Check that neither the top nor bottom tensioner arm stop is touching the cast boss on the tensioner body for CUMMINS engine as picture 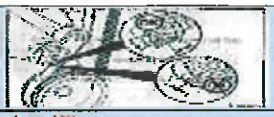		OEM Manual	(✓) YES ( ) NO
	Change water coolant and check condition base of water coolant and record PH.		OEM Manual	(✓) YES ( ) NO
	COOLANT PARAMETERS (PH):	6 or higher	OEM Manual	PH = 7
	Determine if engine hour meter is working and giving accurate measurements and record:		OEM Manual	

[redacted] / 27 Jun 25.

SYSTEM	TASK			Specification	Record/Reading
	HOUR METER PARAMETERS:	LAST READING	_____ HRS	OEM Manual	1213 HRS
	Check and retigthen the bolts of all engine base. / Inspection mouting rubber. As found : Normal			OEM Manual	(✓) YES ( ) NO
	Inspect the engine fan blades that there is a break is it severely distorted or rusted. As found : Normal			OEM Manual	(✓) YES ( ) NO
	Check condition fan blade and guard cover.			OEM Manual	(✓) YES ( ) NO
	Check engine HYD starter drive gear bendix and fly wheel gear teeth condition and record. **Replace if required*			OEM Manual	(✓) YES ( ) NO Bendix Gear : 95 % Fly wheel Gear 95 %
	Check and inspect condition the Bendix of hydraulic Starter motor.			OEM Manual	(✓) YES ( ) NO
	Lubricate and check engine throttle system.			OEM Manual	(✓) YES ( ) NO
	Determine if the tachometer operates properly: Record Value of Idle & Max Speed (RPMs) Note: Too low Idle (RPMS) will cause excessive worn at winch brake			OEM Manual	
	ENGINE RPM SPECIFIC	IDLE/LOW SPEED	900-1000 RPM	OEM Manual	900 RPM
		MAX SPEED	2200 RPM	OEM Manual	2200 RPM
	Confirm engine oil pressure as per Parameters below and Record Value:			OEM Manual	
	ENGINE OIL PRESSURE SPECIFIC	Minimum	Not lower then 10 PSI	OEM Manual	30 PSI
		Maximum	70 PSI	OEM Manual	70 PSI
	Confirm engine fuel pressure Parameters are correct and Record Value:			OEM Manual	
	ENGINE FUEL PRESSURE SPECIFIC**	Normal	Not lower then 18 PSI	OEM Manual	(✓) YES ( ) NO As found 30 PSI
	Confirm engine temperature Parameters and Record Value:			OEM Manual	
	ENGINE WATER TEMP SPECIFIC	NORMAL	158-195 F	OEM Manual	185 F
	Test engine SAFETY DEVICE- ensure engine kill cable shuts off FUEL supply			API RP 2D	(✓) Function ( ) False
	Test engine SAFETY DEVICE- ensure EMERGENCY KILL CABLE - shuts off AIR supply			API RP 2D	(✓) Function ( ) False
	Test engine SAFETY DEVICE- ensure ENGINE low lube oil - releases OIL PRESSURE to ctivate Alarm Air System ****Note*** Engine oil pressure low alarm at 20 PSI*			Company Spec/Standard	(✓) Function ( ) False
	Test engine SAFETY DEVICE- ensure HIGH TEMP - releases OIL PRESSURE to activate Alarm Air System			Company Spec/Standard	(✓) Function ( ) False
	Check and clean up the water separator filter.			OEM Manual	(✓) YES ( ) NO
	Check the general conditionand functioning of turbocharger. Note;			OEM Manual	( ) Leak (✓) Not Leak
	Change fuel filter and inspect the primary hand pump.			OEM Manual	(✓) YES ( ) NO
	Check and Clean up the strainer of transfer pump. **			OEM Manual	(✓) YES ( ) NO
	Check water temperator regulator.(Thermostat). Change if require refer from cooling temperature.			OEM Manual	(✓) YES ( ) NO
	Change corrosion resistor(water filter)			OEM Manual	(✓) YES ( ) NO
	Change cooling fan drive belts.			OEM Manual	(✓) YES ( ) NO
	Check condition of water pump housing.			OEM Manual	(✓) YES ( ) NO
	Check or adjust the engine valve lash. (Intake vale = 0.012", Exhaust valve =0.022 ")			OEM Manual	(✓) YES ( ) NO ( ) N/A
	Check condition wear of pump drive spline and record ***Note; Remaining 70% of Original Spline Surface must be replace.*			Company Spec/Standard	90 % Remaining
	Check condition wear of adaptor Coulping spline shaft and record ***Note; Remaining 70% of Original adaptor Coulping spline shaft Surface must be replace.*			Company Spec/Standard	90 % Remaining
	Check condition wear of Coulping spline and record. Re-tigthen of all lock bolts. ***Note; Remaining 70% of Original adaptor Coulping spline shaft Surface must be replace.*			Company Spec/Standard	90 % Remaining
Hydraulic Start System (Apply for C2-Remote P/F Only)	Check pressure system at the pressure gauge which should reach 3,000 PSI as standard when the system is FULLY charged. Record Value. (As the system cools down, the pressure should drop slightly and finally stabilised.)			OEM Manual	(✓) YES ( ) NO
	Visually inspect all hydraulic connections and hoses for leaks and retighten if necessary. (Caution: This should NOT be done if the system is under pressure.) 1. Slowly release system pressure by loosening the bleed screw on top of the hand pump. 2. Ensure no pressure remains, retighten the suspected leak fitting or replace the damaged hose or component. 3. Retighten the bleed screw on the hand pump. 4. Pump the system up to 2200 - 2600 PSI 5. Inspect that the leak was eliminated.			OEM Manual	(✓) YES ( ) NO
	Function check Accumulator Pre-charge. (Caution: This should NOT be done if the system is under pressure.) 1. Shut the engine off, release system pressure via the bleed screw on top of the hand pump 2. Retighten bleed screw and actuate the hand pump. The pressure will rapidly increase and then stabilised. This pressure is related to accumulator gas pre-charge pressure. 4. If the pressure rapidly increase to 3000 PSI, it indicates that the accumulator has lost its gas charge. 5. Troubleshoot as necessary			OEM Manual	(✓) YES ( ) NO
	Check function rechaging system by function boom down while the engine running. 1. The crane engine is running at 1,000-1500 RPM. 2. Slowly control lever boom function down for charging pressure to accumulator. 3. This pressure should read on prssure gauge between 2200 - 2600 PSI depending on the recharge ratio 80% std. (90% optional). Record Pressure Value.			OEM Manual	2600 PSI
	Check Nitrogen pressure in Accumulator ***Note**spec @ 1,500 psi as follow schematic and if found pressure loss below 1400 PSI then prepare recharge nitrogen in system			OEM Manual	1500 PSI
	Every 36 months or 2000 engine running hours (approximately 1500 starts) replace the high pressure filter.			OEM Manual	(✓) YES ( ) NO ( ) N/A
Pneumatic System	Check for noisy compressor operation, which could indicate a worn drive gear coupling, a loose pulley or excessive internal wear			OEM Manual	(✓) YES ( ) NO
	Check Air Compressor external oil supply and return lines, if applicable, for kinks, bends, or restrictionsto flow			OEM Manual	(✓) YES ( ) NO
	Inspect the Air compressor discharge port, inlet cavity and discharge line for evidence of restrictions and carboning. (if excessive buildup is noted)			OEM Manual	(✓) YES ( ) NO
	Check all hose connections are sound and all mounting and pivoting connections are secure.			OEM Manual	(✓) YES ( ) NO
	Check condition / Clean and lubricate unloading valve			OEM Manual	(✓) YES ( ) NO
	Check proper air pressure is available for the system. Record Value.			OEM Manual	
	AIR SYSTEM PARAMETERS:	MAX 60 PSI		OEM Manual	60 PSI
	Visually inspection condition of air receiver for signs of corrosion or loose of structural integrity.			Industry Standard	(✓) YES ( ) NO
	Check the hose, piping and tubing for mechanical damage, corrosion, splits, blisters, cracking or excessive abrasion on the outer surface			Industry Standard	(✓) YES ( ) NO
	Drain off air filter and reciever to remove condensed water. If water is present, drain until water is removed.			Industry Standard	(✓) YES ( ) NO
	Check proper operation of pop off valve, by manually functioning valve.			Industry Standard	(✓) YES ( ) NO

[redacted] / 27 Jan 25

SYSTEM	TASK		Specification	Record/Reading
	Check proper operation of manual latch valve, by manually functioning latch.		Industry Standard	(✓) YES ( ) NO
	Check proper operation of small engine alarm horn.		Industry Standard	(✓) YES ( ) NO
Hoist / Brakes	Visually check a hoist exhibits erratic operation and/or unusual noise, the hoist must be taken out of service until it is inspected and serviced by a qualified technician. Continued operation of a hoist with a defect in a critical component may lead to loss of load control, property damage, serious injury or death.		OEM Manual	(✓) YES ( ) NO
	Visual exteriors of hoist, frames, drums and flanges for damage, leaks, cracks and wear and repair/replace as required to maintain the structural integrity of the hoist.		OEM Manual	(✓) YES ( ) NO
	Check all hoist mounting pins, bolts or other fasteners and replace or tighten as necessary.		OEM Manual	(✓) YES ( ) NO
	Lubricant level must be maintained between the minimum and maximum levels; midway up sight glass or at bottom of level plug port as equipped and check/clean plug vent. Use only the recommended type of lubricant.		OEM Manual	(✓) YES ( ) NO
	Inspect Brake Valve Opening Pressure test V/V 1-1/4" PD Series : no lower than 550 PSI V/V 1-1/2" CH Series : no lower than 575 PSI	Main	Braden Bulletin 527-Dec,1996	600 PSI
		Aux		600 PSI
	Inspect Brake cylinder opening pressure test. CH/PD Series : 400-450 PSI.	Main	Industry Standard	400 PSI
		Aux		400 PSI
	Measure differancian of static and dynamic brake. CH/PD Series : 150-250 PSI.	Main	Industry Standard	200 PSI
		Aux		200 PSI
	Check for external oil leaks and repair as necessary. This is extremely important due to the accelerated wear that will result from insufficient lubricating oil in the hoist.		OEM Manual	(✓) YES ( ) NO
	RECORD BOOM CYLINDER INFORMATION :	Boom cylinder Diameter:	OEM Manual	DIA: 12 Inch
		CY Number:	OEM Manual	L-8103-13 R-8103-16
		Serial Number:	OEM Manual	L-9203 R-9206
	RECORD MAIN HOIST INFORMATION :	Manufacturer:	OEM Manual	Braden
		Model:	OEM Manual	CHM5A-23020-02-1
		Serial Number:	OEM Manual	06014
	Check MAIN HOIST for proper operation and good condition		API RP 2D	(✓) YES ( ) NO
	Brake test & record pressure of MAIN HOIST.		OEM Manual	(✓) YES ( ) NO As found Good
	Change main hoist gear oil and inspect for small particles in the old oil. ** Refer to Onsite Gear Oil Sample Procedure ** ** Replace and send oil sample to SKL if abnormal ** ** Take photo of Oil Sampling for Reference**		OEM Manual	(✓) YES ( ) NO As found No Contaminants.
	RECORD AUXILIARY HOIST INFORMATION :	Manufacturer:	OEM Manual	Braden
		Model:	OEM Manual	PDH6-29064-04-1
		Serial Number:	OEM Manual	1264307
	Check AUXILIARY HOIST for proper operation and good condition		API RP 2D	(✓) YES ( ) NO
	Brake test & record pressure of AUXILIARY HOIST		API RP 2D	(✓) YES ( ) NO
	Change Aux. hoist gear oil and inspect for small particles in the old oil. ** Refer to Onsite Gear Oil Sample Procedure ** ** Replace and send oil sample to SKL if abnormal ** ** Take photo of Oil Sampling for Reference** As found ;		OEM Manual	( ) SEND SKL LAB (✓) NOT SEND SKL LAB
	Check pressre relief Valve: Determine hoistes' relief valve pressure gauge is working and giving accurate measurement by notice whether pressure gauge is vibrating or not. If not, set relief valve pressure in accordance with the schematic and parameters below. Record all readings.		OEM Manual	(✓) YES ( ) NO
	BOOM RELIEF VALVE TEST	Relief Specific: 3,000 PSI	OEM Manual	3000 PSI
	MAIN HOIST RELIEF VALVE TEST	Relief Specific: 3,250 PSI	OEM Manual	3250 PSI
	AUX HOIST RELIEF VALVE TEST	Relief Specific: 2,950 PSI	OEM Manual	2950 PSI
	SWING RELIEF VALVE TEST	Relief Specific: 1,500 PSI	OEM Manual	1500 PSI
	Measure Pressure of hoist motor case drains and Record Value Reference Bulletin: BRADEN Inspection, Testing, Preventive Maintenance and Special Operating Instructions For Planetary Hoists PB-308 latest edition for further details.		OEM Manual	
	MAIN HOIST CASE DRAIN for Gear Motor (Down Mode).	PRESSURE < 100 psi	Company Spec/Standard	16 PSI
	AUX. HOIST CASE DRAIN for Gear Motor (Down Mode).	PRESSURE < 100 psi	Company Spec/Standard	22 PSI
Hydraulic System	Check hydraulic tank oil level. Oil should be visible in the sight glass. Top up as required (3/4 Tank Minimum)		OEM Manual	(✓) YES ( ) NO
	Check hydraulic oil condition. (Check if running hours are more than 100 hours from last oil change or during Annual inspection) ** Refer to Onsite Hydraulic Oil Sample Procedure ** ** Replace and send oil sample to SKL if abnormal ** ** Take photo of Oil Sampling for Reference**	Rando HD-68	Company Spec/Standard	( ) SEND SKL LAB (✓) NOT SEND SKL LAB
	Inspect hydraulic tank and strainer filter. Change hydraulic oil, if required with lab confirmation.		Company Spec/Standard	(✓) YES ( ) NO
Hydraulic System	Drain off 1 liter of oil to remove condensed water. If water is present, drain until water is removed and top up with clean oil		Industry Standard	(✓) YES ( ) NO
	Check for any hydraulic leaks		Industry Standard	(✓) YES ( ) NO
	Check the hydraulic hose, piping and tubing for mechanical damage, corrosion, splits, blisters, cracking or excessive abrasion on the outer surface		API RP 2D	(✓) YES ( ) NO
	Check that all hydraulic hose connections are sound and that all mounting and pivoting connections are secure.		Industry Standard	(✓) YES ( ) NO
	Lubricate hydraulic swivel in pedestal and insure tie down restrains are in place and preventing the swivel from rotating with the crane structure.		OEM Manual	(✓) YES ( ) NO
	Ensure the filler breather on tank is not covered or clogged		Industry Standard	(✓) YES ( ) NO
	Visually inspect for missing or loose pins, pin keepers, bolts, nuts, fasteners on all pumps, motors and valves		API RP 2D	(✓) YES ( ) NO
	* Re-tighten the stud bolt of hydraulic main pump and marking the nut for checking to prevent loosening. Note : Torqe spec model P76, P75, PGP/PGM350 ,PGP/PGM330 = 200 ft-lbs. , for model PGP/PGM315 = 140 ft-lbs. and PGP/PGM365 = 450 ft-lbs.		The Commercial Intertech manual	(✓) YES ( ) NO
	Check the filter bypass indicator, while engine is running		OEM Manual	(✓) YES ( ) NO
	With engine running (after all other items pass inspection), check the system for leaks around fittings, hoses, valves and reservoirs		Industry Standard	(✓) YES ( ) NO
	With engine running, check the source of any unusual noise or vibration that may cause or indicate equipment damage or wear		Industry Standard	(✓) YES ( ) NO
	Ensure all hoses are properly rated for the system, see "Parameters" for each system for details.		Industry Standard	(✓) YES ( ) NO
	Record hydraulic oil operating temperture. Note: Hydraulic fluid overheating temperature is over 180 F degrees or 82 C, degrees (reservoir temperature)		Industry Standard	160 Degree F

[redacted] / 27 Jun 25.

File

SYSTEM	TASK				Specification	Record/Reading
	Determine if hydraulic return pressure gauge is working and giving accurate measurements. Record readings					
	RECORD HYDRAULIC RETURN PRESSURE PARAMETERS:			60 PSI "maximum"	OEM Manual	22 PSI
	Check and inspect the hydraulic return filters and seals.				OEM Manual	(✓) YES ( ) NO
	Function Testing and record pressures with engine at :			2,200 RPM	API RP 2D	
	BOOM FUNCTION TEST (Need Crane Mech to verify each platform)				OEM Manual	
	Boom Angle : 60 Degree (Recommend or as applicable)	UP	Cracking pressure	RECORD	OEM Manual	600 PSI
			Full Speed Pressure	RECORD	OEM Manual	800 PSI
		DOWN	Cracking pressure	RECORD	OEM Manual	800 PSI
			Full Speed Pressure	RECORD	OEM Manual	1200 PSI
	MAIN HOIST FUNCTION TEST (Need Crane Mech to verify each platform)				OEM Manual	
	Boom Angle : 60 Degree (Recommend or as applicable)	UP	Cracking pressure	RECORD	OEM Manual	50 PSI
			Full Speed Pressure	RECORD	OEM Manual	400 PSI
		DOWN	Cracking pressure	RECORD	OEM Manual	600 PSI
			Full Speed Pressure	RECORD	OEM Manual	1200 PSI
	AUX HOIST FUNCTION TEST (Need Crane Mech to verify each platform)				OEM Manual	
	Boom Angle : 60 Degree (Recommend or as applicable)	UP	Cracking pressure	RECORD	OEM Manual	100 PSI
			Full Speed Pressure	RECORD	OEM Manual	600 PSI
		DOWN	Cracking pressure	RECORD	OEM Manual	600 PSI
			Full Speed Pressure	RECORD	OEM Manual	1500 PSI
	SWING FUNCTION TEST (Need Crane Mech to verify each platform)				OEM Manual	
	Boom Angle : 60 Degree (Recommend or as applicable)	LEFT	Cracking pressure	RECORD	OEM Manual	200 PSI
			Full Speed Pressure	RECORD	OEM Manual	500 PSI
		RIGHT	Cracking pressure	RECORD	OEM Manual	900 PSI
			Full Speed Pressure	RECORD	OEM Manual	500 PSI
Electrical system, Crane Boom Lighting and red obstruction light	Check the electrical junction boxes, wires and connections for deterioration, desiccant bags, (replace as required)				Industry Standard	(✓) YES ( ) NO
	Check the condition of the grounding and lighting protection system.				Company Spec/Standard	(✓) YES ( ) NO
	Visually inspect boom floodlight and light guards for loose, missing, corroded				Company Spec/Standard	(✓) YES ( ) NO
	Check condition pipe support , U-bolt ,nuts of boom floodlight and Electric slipring for loose , missing , corroded				Company Spec/Standard	(✓) YES ( ) NO
	Check Electric slipring/swivel for 360° continuous rotation				OEM Munnal	(✓) YES ( ) NO
	Check Water Ingress, condensation in electric slipring, red obstruction light and boom floodlight				OEM Munnal	(✓) YES ( ) NO
	Check feely movement and lubricate of boom floodlight				OEM Munnal	(✓) YES ( ) NO
	With generator in operation, intergize all lights to unsure proper function.				API RP 2D	(✓) YES ( ) NO
	Check condition of crane boom lighting and safety net is secured with strong point. * **Safety net should be replace 24 months after installation (2 year)***			Last installation date _____	Company Spec/Standard	(✓) YES ( ) NO
	Check function of crane sound signal				Company Spec/Standard	( ) YES ( ) NO (✓) N/A
	Check function of crane boom lighting at boom upper section				Company Spec/Standard	(✓) YES ( ) NO ( ) N/A
	Check function of crane boom lighting at boom lower section				Company Spec/Standard	(✓) YES ( ) NO ( ) N/A
	Check function of crane boom lighting at winch skid				Company Spec/Standard	(✓) YES ( ) NO ( ) N/A
	Check function of crane boom lighting at crane cabin				Company Spec/Standard	(✓) YES ( ) NO ( ) N/A
	Check function becon light at boom tip				Company Spec/Standard	(✓) YES ( ) NO ( ) N/A
	Inspection wire rope guide & Roller assembly				Company Spec/Standard	(✓) YES ( ) NO
	Visually inspect red obstruction light pipe support, u-bolts, nuts connection to hand rail for loose, missing, corroded				Company Spec/Standard	(✓) YES ( ) NO
	Visually inspect safety sling attached to the red obsruction light and its base for loose, missing, corroded				Company Spec/Standard	(✓) YES ( ) NO
	Visually inspect red obstruction light function. The light is designed to turn on all the time.				Company Spec/Standard	(✓) YES ( ) NO
Operator Control Station	Check general condition of control panel, bolts, paint security, etc.				API RP 2D	(✓) YES ( ) NO
	Determine if there is a serviceable fire extinguisher in the vicinity of the crane				Company Spec/Standard	(✓) YES ( ) NO
	Determine if correct load chart is in use and easily visible for operator				API RP 2D	(✓) YES ( ) NO
	Determine if charts, indicators and hand signal chart are in the cabling and firmly attached				API RP 2D	(✓) YES ( ) NO
	Determine if angle/radius indicator plate is easily visible to operator and is moving freely.				API RP 2D	(✓) YES ( ) NO
	Check condition of control levers and determine if they "dead-man" back to the neutral position.				API RP 2D	(✓) YES ( ) NO
	Check condition of pressure gauges.				API RP 2D	(✓) YES ( ) NO
	Check proper control labels are firmly installed, completely legible and properly labeled				API RP 2D	(✓) YES ( ) NO
	Check controls for freedom-of-movement				API RP 2D	(✓) YES ( ) NO
	Check condition , Leak, freely moement of Dynamic swing break system *** Note; If HYD Oil loose in CYD reservoir must be refill*				OEM Manual	(✓) YES ( ) NO
	Check condition , Leak, freely moement of Accelerate System *** Note; If HYD Oil loose in CYD reservoir must be refill*				OEM Manual	(✓) YES ( ) NO
	Check all safety glass and rubber seal for proper condition				API RP 2D	(✓) YES ( ) NO ( ) N/A
	~~Function Test Horn. Note;~~ 600				Industry Standard	(✓) YES ( ) NO ( ) N/A
	~~Ensure PRE/POST Check List and Pocket Manual in the cabin. Note;.....~~				~~Company Standard~~	(✓) YES ( ) NO ( ) N/A
Load Indicator System	Visual check on fittings and connections for leaks. Fix leak if any. Note:..... 600				OEM Manual	(✓) YES ( ) NO
	Should any leaks exist, stop leak and recharge system, refer to maintenance manual				OEM Manual	(✓) YES ( ) NO
	Change and flushing Load cell fluid.				OEM Manual	(✓) YES ( ) NO
	Check general condition of tubbing, hoses, pins bolts, paint, etc.				Industry Standard	(✓) YES ( ) NO
	Insure load cell is free of obstructions				OEM Manual	(✓) YES ( ) NO
	Check condition of gauge(s) face and clean glass as required.				OEM Manual	(✓) YES ( ) NO

[redacted] / 27 Jun 25

SYSTEM	TASK	Specification	Record/Reading
	Check the scale's operation and weighing accuracy. (Main Hoist) Remark : Maximum variance +/- 2% Note;	Company Spec/Standard	( ) YES ( ) NO ( ) N/A
	Check the scale's operation and weighing accuracy. (Aux. Hoist) Remark : Maximum variance +/- 2% Note;	Company Spec/Standard	( ) YES ( ) NO ( ) N/A
	Check the internal casting fluid of weight indicator. top up if required	Industry Standard	( ) YES ( ) NO ( ) N/A
	Insure SWL tag matches ratings on the Crane Load Chart.	OEM Manual	( ) YES ( ) NO ( ) N/A
	Insure Boom Length, matches the Crane Load Chart	OEM Manual	( ) YES ( ) NO ( ) N/A
	Insure Boom Angle measurements and readings match the boom angle indicator.	OEM Manual	( ) YES ( ) NO ( ) N/A
	Insure Boom Radius measurements indicate the distance from center line of the crane to the hook	OEM Manual	( ) YES ( ) NO ( ) N/A
	Check Main load cell gap 1/4 (0.250) inch	OEM Manual	( ) YES ( ) NO ( ) N/A
	Check Aux load cell gap 3/8(0.380) inch (Compression Load Cell Type)	OEM Manual	( ) YES ( ) NO ( ) N/A
Pedestal & Structure	Visually check Pedestal for chipped/cracked paint, deformation, worn parts, dents, corroded areas, cracks weld, etc.	API RP 2D	( ) YES ( ) NO
	Check water rain drain at pedestal must be not obstuct	Industry Standard	( ) YES ( ) NO
	Check pin and cotter pin of pedestal missing , corrosion, wear, damage and exercise pin.	Industry Standard	( ) YES ( ) NO
	Visually check Base - Plate connection and Base hoist Structure for chipped/cracked paint, deformation, worn parts, dents, corroded areas, cracks weld, etc.	API RP 2D	( ) YES ( ) NO
	Check A fixed such as Handrial, Walkway, Grating, stationary structure without significant movement in response to waves and currents in normal operating conditions.	API RP 2C	( ) YES ( ) NO
	Visually check and lubricate maintenance jib. ***Note*** If on pedestal crane	OEM Manual	( ) YES ( ) NO ( ) N/A
	Check maintenance jib is secure firmly. ***Note*** If on pedestal crane	OEM Manual	( ) YES ( ) NO ( ) N/A
Box Boom & Luffing CYD	Check and Verify entire box boom and Boom CYD for loss of protective coating and corrosion. Note; Good	API RP 2D	( ) YES ( ) NO
	Check and Verify entire box boom and Boom CYD for chipped/cracked paint, deformation, worn parts, dents, corroded areas, cracks, etc. Note; Good	API RP 2D	( ) YES ( ) NO
	Check and Verify boom end connections, for bends, dents, corroded areas, cracked welds, and signs of mechanical damage, wear, etc. **any deviation should be reported**	API RP 2D	( ) YES ( ) NO
	Check and Verify boom rest and wooden support to ensure it's in good condition	API RP 2D	( ) YES ( ) NO
	Inspect pin and pin holes of Upper tank and Lower tank for excessive clearance	OEM Manual	( ) YES ( ) NO
	BOOM CYLINDER PIN MAXIMUM TOLERANCE — 0.125 inch (3mm)	Industry Standard	As found On Standard
	Check BOOM CYLINDERS for proper operation and good condition	API RP 2D	( ) YES ( ) NO
	Check Boom cylinder barrels and rods for leaks, mechanical damage and corrosion	Industry Standard	( ) YES ( ) NO
	Check and measurement boom foot pin and connection pins for clearance	Industry Standard	( ) YES ( ) NO
	BOOM FOOT PINS & BOOM BOX CONNECTER PIN TOLERANCE — 0.125 inch (3mm)	Industry Standard	
	Boom Foot Pin Tolerance	Industry Standard	0.013 inch
	Boom Box Connecter Pin Tolerance	Industry Standard	0.025 inch
	Check connecting bolts of box boom loose, corrosion, wear, damage	OEM Manual	( ) YES ( ) NO
	Lubricate boom foot pins and bushings	OEM Manual	( ) YES ( ) NO
	Lubricate boom cylinder pins, bearings and bushings	OEM Manual	( ) YES ( ) NO
	Boom function test angle/radius to correction **Note; The cylinder(s) mechanism shall be capable of elevating the boom from a minimum of zero degrees to the maximum recommended boom angle.	API RP 2C	( ) YES ( ) NO
	Operation functional test and verify Boom Creeping down **Note ; Test at angle 60°	Industry Standard	( ) YES ( ) NO As found No Creeping
Wire Rope	Determine if parts-of-line match parts of line on the load chart in the crane cabin.	API RP 2D	( ) YES ( ) NO
	Determine if visible portion of wire rope adequately lubricated. If not lubricate wire rope	API RP 2D	( ) YES ( ) NO
	For each layer of wire rope on drum, check that all rope is parallel and each crossover point at hoist flanges is correct	API RP 2D	( ) YES ( ) NO
	The top layer of rope must not be lower to the flange tips 2.5 in for Smooth drum,2 in for groove drum or 2.5 times of wire rope diameter	API RP 2C	( ) YES ( ) NO
	Inspect wire rope for, kinking, crushing, broken wires, necking down of rope diameter, worn outside wires, corroded or broken wires at end connection, cutting or unstringing.	API RP 2D	( ) YES ( ) NO As found Good
	NoteRunning Ropes of rotation-resistant construction used in the main or auxiliary Hoist: - Four (4) Randomly distributed broken wires within 30 rope diameter - Two (2) broken wires in one stand within 6 rope diameter	API RP2D Edition 7	( ) YES ( ) NO As found Aux broken 1 wire
	One valley break can indicate internal rope damage requiring close inspection of this section of the rope. When one or more valley breaks are found in one lay length the rope should be retired.	API RP2D Edition 7	( ) YES ( ) NO As found Good
	Reductions for the rope diameter, from initial wire rope dimensional measurements, in a nonworking area (an area away from the sheaves) compared to the lowest diameter of rope measured in three working areas (areas where the rope regularly goes over a sheave) of more than the following is observed: — 3/64 in. (0.047 in.) (1.2 mm) for diameters up to and including 3/4 in. (19.1 mm); — 1/16 in. (0.062 in.) (1.6 mm) for diameters of 7/8 in. to 1-1/8 in. (22.2 mm to 28.6 mm); — 3/32 in. (0.093 in.) (0.8 mm) for diameter of 1-1/4 in. to 1-1/2 in. (31.8 mm to 38.1 mm); — For rope diameters greater than 1-1/2 in., a 5 % diameter loss from baseline measurement. —Wear of one-third the original diameter of the outside individual wires.	API RP2D Edition 7	( ) YES ( ) NO As found dimension On Standard
	Increase in the length of an individual rope lay is observed. This increase in lay length and accompanying reduction in diameter can be caused by failure of the core. This can occur more readily in ropes or rotation-resistant construction.	API RP2D Edition 7	( ) YES ( ) NO As found Good
	-Inspection and Verify running and standing rope from heat effect **Note; Not more than 250°C -There is evidence of heat damage from any source (i.e. engine exhaust, flare towers, stress corrosion cracking, etc.). Heat can be generated by passing a rope over a frozen or non-turning sheave, contact with structural members of the crane, improperly grounded welding leads or lightning strikes	Industry Standard	( ) YES ( ) NO As found Good
	With the boom at the highest possible angle and the main load block or overhaul ball at the water level, ensure there is a minimum of 5 wraps of wire-rope remaining on the drums. Note: (Thai law, requires minimum of 2 wraps)	API SPEC 2C / Thai Law	( ) YES ( ) NO
	Reference: · Running rope safety factor not less than 6 for wire rope that are running wire, (Thai law; Wire rope nominal breaking strength x number parts of line / Design factor 6) · Standing rope safety factor not less than 3.5 for wire rope that are stay cables, (Thai law)	Thai Law	( ) YES ( ) NO ( ) N/A
	Measure and record nominal diameter of "running ropes"main and auxiliary (particularly on drum, equalizer sheave and at sockets, clips and dead end points) *****Nominal = several measurements added together divided by Number of measurements*****	API RP 2D	( ) YES ( ) NO
	Inspect wire rope and record dimension.	API RP 2D	
	MAIN WIRE ROPE OD: — FULL DRUM	OEM Manual	0.646 inch
	HALF DRUM	OEM Manual	0.640 inch
	WATER LEVEL	OEM Manual	0.645 inch

[redacted] / 29 Jun 25.

File

SYSTEM	TASK		Specification	Record/Reading
	AUX WIRE ROPE OD:	FULL DRUM	OEM Manual	0.645 inch
		HALF DRUM	OEM Manual	0.645 inch
		WATER LEVEL	OEM Manual	0.645 inch
	Slip-Cut 1 meter of all ropes at the wedge socket and re-wedge to prevent rust inside of wedge socket (at outward end of rope, not on hoist drum) Dead end tail length is never less than 6 inches, or: - Standard 6 to 8 Strand wire rope is not less than 7 times the rope diameter - Rotation Resistant Wire Rope is not less than 20 times the rope diameter		Company Spec/Standard	(✓) YES ( ) NO
	U-bolt and Fist Grip Clips: Extreme care should be exercised to assure proper orientation of U-bolt clips. The U-bolt segment shall be in contact with the wire rope dead-end. The orientation, spacing, torquing, and number of all clips shall be in accordance with the crane manufacture's specifications.		API SPEC 2C	(✓) YES ( ) NO
	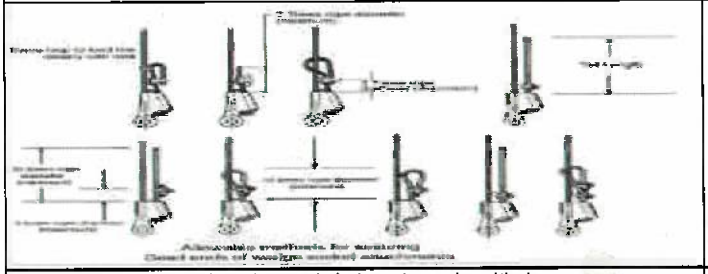		API SPEC 2C	Model ans Size wedge socket. Main hoist. Model..... Size.....5/8..... Aux.Hoist. Model..... Size.....5/8.....
	Verify that the wedge socket and wedge are the correct size for the rope in use and record the size		API SPEC 2C	(✓) YES ( ) NO
Sheaves & Bearings	Lubricate all sheave bearings.		API RP 2D	(✓) YES ( ) NO
	Visually inspect all sheaves and bushings for cracks, wear and deterioration		API RP 2D	(✓) YES ( ) NO As found.....Good.....
	Visually inspect wire rope track of sheave for rope imprints, wear and deterioration. If damage exist sheave should be resurfaced or replaced.		API RP 2D	(✓) YES ( ) NO As found.....Good.....
	Pins retained by snap rings, bolt lock shafts, plates lock should be checked for missing or loose for all		API RP 2D	(✓) YES ( ) NO
	Check wirerope guards and keepers for proper location and condition.		API RP 2D	(✓) YES ( ) NO
	Determine if wire rope is jumping the sheaves, by looking for signs of damage on the sheave brim		Industry Standard	(✓) YES ( ) NO
	Sheave Rope Profile for optimum Rope life the sheave groove profile should be correctly matched to the rope diameter		Industry Standard	(✓) YES ( ) NO
	Check rope sheave should be machine grooved to adepth of not less than 1.5 times the norminal diameter of the rope		Industry Standard	(✓) YES ( ) NO
	Inspect all groove of sheaves by sheave gauge , Use sheave gauge as show in figure .Grooves should have an arc of contact with the wire rope between 135 and 150 degrees. They should be tapered to permit the rope to enter and leave the groove smoothly		Industry Standard	
	MAIN POINT SHEAVES: Note:.....On standard.....		Industry Standard	No.1 (✓) YES ( ) NO No.2 (✓) YES ( ) NO
	AUX SHEAVES: Note:.....On standard.....		Industry Standard	No.1 (✓) YES ( ) NO
	IDLER SHEAVES: Note:.....On standard.....		Industry Standard	AUX (✓) YES ( ) NO Main (✓) YES ( ) NO
	Pins for bronze bushing and straight roller bearing should have a running clearnace of .031 inch/ sheave of end play and should be adjusted accordingly.(count from left)		Industry Standard	(✓) YES ( ) NO
	Confirmation the dimension (OD) of all sheaves and records		Industry Standard / API Standard	(✓) YES ( ) NO
	MAIN POINT SHEAVES:		Industry Standard	Sheave No.1 0.005 inch Sheave No.2 0.003 inch
	AUX SHEAVES:		Industry Standard	Sheave No.1 0.009 inch
	IDLER SHEAVES:		Industry Standard	Sheave AUX 0.005 inch. Sheave Main 0.005 inch.
	Ensure the sheaves are aligned and the fleet angle is correct **Remark ; Wire rope User's Manual allows 2 degree on grooved winch drum, Smooth Drum shuold be not more than 1-1/2 degree		API RP 2D	(✓) YES ( ) NO
	Determine if wire rope size and sheave sizes/grooves are compatible and record size. Sheave pitch diameter (D) to nominal wire rope diameter (d) ratio (D/d) shall not be less than 18:1		API SPEC 2C	(✓) YES ( ) NO
	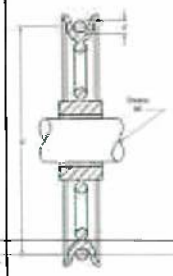 MAIN POINT SHEAVES:	SHEAVE D / WIRE ROPE d = >18	API SPEC 2C	18 inch (D) 5/8 inch (d) 28.8 (Ratio D/d)
	AUX SHEAVES:	SHEAVE D / WIRE ROPE d = >18	API SPEC 2C	16 inch (D) 5/8 inch (d) 25 (Ratio D/d)
	IDLER SHEAVES:	SHEAVE D / WIRE ROPE d = > 18 (If applicable)	API SPEC 2C	18 inch (D) 5/8 inch (d) 28.8 (Ratio D/d)
	MAIN BLOCK SHEAVES:	SHEAVE D / WIRE ROPE d = > 16	API SPEC 2C	44 inch (D) 5/8 inch (d) 70.4 (Ratio D/d)
Load Block	Load Block: Check the load block for cleanliness, binding sheaves, damaged or worn sheaves, worn or distorted sheave pins, broken bolts, and worn cheek weights. Note ;.....		Industry Standard	(✓) YES ( ) NO As found.....Good.....

[redacted] / 29 Jan 25

File:

SYSTEM	TASK	Specification	Record/Reading
	Hook: Check the hook damage, excessive wear to the hook safety latch, hook swivel trunnions, thrust collar, securing, damage or missing lubrication fittings, proper lubrication, cracks and gouges, and if visibly bent or twisted or has been exposed to welding or arching. Note :	Industry Standard	(✓) YES ( ) NO As found Good
	Hook: Tip has been bent more than 10 degree out of plane from the hook body	Industry Standard/API RP2D7	(✓) YES ( ) NO As found Good
	Inspect the Pins for bronze bushing and straight roller bearing should have a running clearnace of .031 inch/ sheave of end play and should be adjusted accordingly	Industry Standard	(✓) YES ( ) NO
	Inspect Hook or shackle to swivel case clearance is set at .031 to .062 inch, Clearance exceeding .12 to .18 (ONLY CROSBY BRAND)	OEM Crosby	(✓) YES ( ) NO
	OEM STANDARD RECOMMEND that Crane block removal from service untill replaced and repair following below	**OEM STANDARD**	
	- Elongated center pin and hook trunnion holes exceeding 5% of Original diameter	OEM STANDARD	(✓) YES ( ) NO As found On standard
	-Material loss due to wear exceeding 10% of original section	OEM STANDARD	(✓) YES ( ) NO As found On standard
	-Sheave wire rop groove diameter smaller than 2.5%	OEM STANDARD	(✓) YES ( ) NO As found On standard
	Loosened tie bolts nuts, center pin round nuts, check weight cap screws and hook nut cap screws. Tie bolt nuts to be torqued to 35-40 ft.Lbs and restaked, all other fasteners wrench tight	**OEM STANDARD**	(✓) YES ( ) NO
	Throat opening - any distortion causeing an increase in throat opening of 5% not ot exceed 1/4 in. (6 mm.)(or as recommended by the manufacturer)	**ASME B30.10**	(✓) YES ( ) NO
	Inspect rope track worn in sheave groove, sheave must be resurface or replace	API RP 2D	(✓) YES ( ) NO
	Ensure the load block is not using "Cast Iron" check weights they can not be used as per API	API SPEC 2C	(✓) YES ( ) NO As found OK
	Determine if all hooks are equipped with properly operating safety latches and check for proper functioning	API RP 2D	(✓) YES ( ) NO
	Lubricate sheave bearings and swivels	OEM Manual	(✓) YES ( ) NO
	Re-thighten nut firmly to point at which trunion will just rotate, the Re-tighten set-screw in nut and thread condition as in the picture below,	Industry Standard	(✓) YES ( ) NO
	Last NDE inspection record	Industry Standard	Last inspect date
	RECORD LOAD BLOCK INFORMATION : Manufacturer:	OEM Manual	MCKISSICK
	Model:	OEM Manual	M30DT4H
	Serial Number:	OEM Manual	4112641-95
	Record Load block measurements and details for future comparison with historical data ⊟	Industry Standard	(✓) YES ( ) NO
	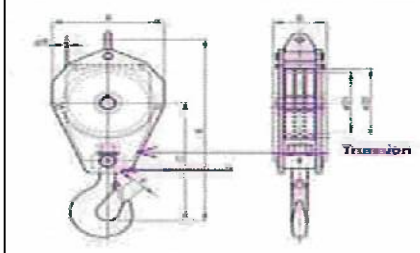 A - Block OD	Industry Standard	12 1/2 mm/ inch
	B - Block length	Industry Standard	34 mm/ inch
	C - Center of Pin to hook Saddle	Industry Standard	44 mm/ inch
	D1 - Sheave Diameter	Industry Standard	14 mm/ inch
	E - Block Width	Industry Standard	17 1/2 mm/ inch
	F - Throat Opening	Industry Standard	6 1/2 mm/ inch
	G - Trunnion	Industry Standard	0.025 mm/ inch
Aux. Ball	**Inspect Auxiliary ball for cleanliness, binding swivel, work pad-eye hole. Inspect the hook damage, excessive wear to the hook safety latch, Bent connector plates,Severe corrosion pitting, hook swivel trunnions, thrust collar, securing, damage or missing lubrication fittings,Loose, missing or damaged retaining nuts, cotter pins or swivel set screws ,Missing or illegible rating and warning tags, proper lubrication, cracks and gouges, and if visibly bent or twisted or has been exposed to welding or arching.**	Industry Standard	(✓) YES ( ) NO
	Hook: Tip has been bent more than 10 degree out of plane from the hook body	Industry Standard/API RP2D7	(✓) YES ( ) NO
	OEM STANDARD recommend that Crane overhaul ball removal from service untill replaced and repair following below	**OEM STANDARD**	
	- Elongated ball pin holes, hook latch pin holes and swivel eye exceeding 5% of original diameter.	OEM STANDARD	(✓) YES ( ) NO As found On standard
	-Swivel end play gap exceeding .08". Excessive end play indicates damaged internal set screw	OEM STANDARD	(✓) YES ( ) NO As found On standard
	-Material loss due to wear exceeding 10% of original section	OEM STANDARD	(✓) YES ( ) NO As found On standard
	Throat opening - any distortion causeing an increase in throat opening of 5% not ot exceed 1/4 in. (6 mm.)(or as recommended by the manufacturer)	**ASME B30.10**	(✓) YES ( ) NO
	All hooks that lift personnel are to have a positive locking safety latch **locking Pin to be used while lifting personnel**	API RP 2D	(✓) YES ( ) NO
	*** Temperature Effected : When hooks are to be used at temperature above 400° F. (204°C) or below -40°F (-40°C), the hook manufacturer or a qualified person should be consulted *** Chemically Active Environment : The strength of hooks can be affected by chemically active environments, such as caustic or acid substances or fumes. The hook manufacturer or qualified person should be consulted before hooks are used in chemically active environment	**ASME B30.10**	Yes
	Verify to ensure nut firmly at which trunion rotate. Identify to set-screw in nut/ swivel/ counter pin and thread condition.	Industry Standard	(✓) YES ( ) NO
	Last NDE inspection record	Industry Standard	Last inspect date
	RECORD AUX BALL INFORMATION : Manufacturer:	OEM Manual	MCKISSICK
	Model:	OEM Manual	MB07T200E
	Serial Number:	OEM Manual	4113342-9
	Record Auxiliary Ball measurements and details for future comparison with historical data: For Model MB07T200E ONLY	Industry Standard	
	AA Dimensions 3.0 Inch	Industry Standard	3.0 mm/ inch
	A Dimensions 24.89 Inch	Industry Standard	24.89 mm/ inch

[redacted] / 27 Jun 25

File:

SYSTEM	TASK		Specification	Record/Reading
	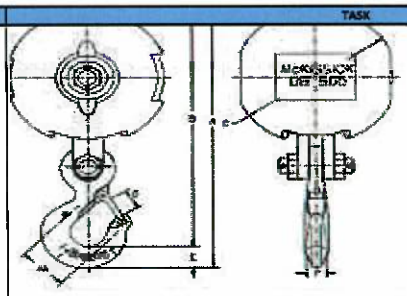	B Dimensions 21.71 inch	Industry Standard	21.70 mm/ inch
		C Dimensions 12.50 inch	Industry Standard	12.50 mm/ inch
		D Dimensions 1.61 inch	Industry Standard	1.61 mm/ inch
		E Dimensions 1.81 inch	Industry Standard	1.81 mm/ inch
		F Dimensions 1.38 inch	Industry Standard	1.38 mm/ inch
		H Dimensions 1.38 inch	Industry Standard	1.38 mm/ inch
		I Dimensions 0.88 inch	Industry Standard	0.88 mm/ inch
		J Dimensions 1.31 inch	Industry Standard	1.31 mm/ inch
	Record Auxiliary Ball measurements and details for future comparison with historical data: For Model OB 7EE 200-4		Industry Standard	
	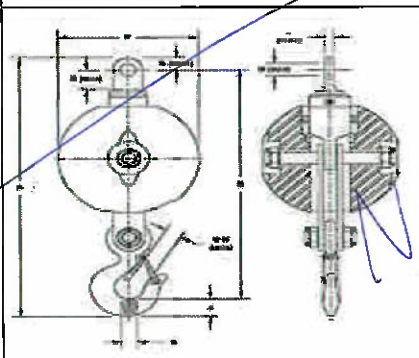	A Dimensions 27.25 inch	Industry Standard	____ mm/ inch
		B Dimensions 24.10 inch	Industry Standard	____ mm/ inch
		F Dimensions 12.00 inch	Industry Standard	____ mm/ inch
		H-H Dimensions 1.38 inch	Industry Standard	____ mm/ inch
		J Dimensions 1.81 inch	Industry Standard	____ mm/ inch
		K Dimensions 1.46 inch	Industry Standard	____ mm/ inch
		R Dimensions 1.55 inch	Industry Standard	____ mm/ inch
		S Dimensions 1.34 inch	Industry Standard	____ mm/ inch
		T Dimensions 1.03 inch	Industry Standard	____ mm/ inch
		U Dimensions 1.31 inch	Industry Standard	____ mm/ inch
Safety system	Check Condition anti - two block , hanging chain ,eye bolts , fix bolts , shackle for missing , corrosion , erosion , deformation		API RP 2D	( )YES ( ) NO
	Check anti - two block kick out plate for freely movement		Company Spec/Standard	(✓)YES ( ) NO
	Check anti-2-block device proper function of Main winch		Company Spec/Standard	(✓)Function ( )False
	Check anti-2-block device proper function of Aux. winch		Company Spec/Standard	(✓)Function ( )False
	Check relation of boom radius and boom angle (lowest, middle, highest) with refrence to load chart. Recharge fluid W-15 to load indicator, if required.		API RP 2D	(✓)YES ( ) NO
	Functional test of emergency lowering system (See procedure in Emergency Load Lowering Box). Note: Keep for 1 Yr PM to sustain crane mechanic competency. Caution: Function test must be performed on top deck with max 2-foot height.		Company Spec/Standard	(✓)YES ( ) NO ( ) N/A
	Visually check emergency load lowering kit. Ensure EMERGENCY LOWERING PROCEDURE and MATERIAL LIST are in the box. - Ensure ALL items shown on the list are in the box and in good condition - SECURE THE BOX WITH A TIE WRAP.		Company Spec/Standard	(✓)YES ( ) NO ( ) N/A
Slew Mechanism	Visually check for damage and excessive wear on gear teeth		OEM Manual	(✓)YES ( ) NO
	Visually check slew gear box in the area of oil seal for any leaks		API RP 2D	(✓)YES ( ) NO
	RECORD SLEW GEAR BOX INFORMATION :	Manufacturer:	OEM Manual	ESK
		Model:	OEM Manual	250 A 0164-51
		Serial Number:	OEM Manual	0511 2024-001
	CHECK and RE-TORQUE swing drive gearbox mounting bolts at following brands: - ESKRIDGE, Model: 250 = 150 FT-LBS		API RP 2D	(✓)Yes ( )No
	Check swing gearbox oil level/condition, top up if required	Meropa 220	OEM Manual	(✓)YES ( ) NO
	Monitor slew gearbox oil condition by visually examine for burnt smell, metal particles, and/or other contaminants, record and change if found.		OEM Manual	(✓) CHANGE OIL ( ) NOT CHANGE OIL
	Change slew gear box oil		OEM Manual	(✓) CHANGE OIL ( ) NOT CHANGE OIL
	Grease all pivot points of slew ring (bearing)		OEM Manual	(✓)YES ( ) NO
	Grease open gears (pinion)		OEM Manual	(✓)YES ( ) NO
	Rotate crane 360 degree and check smoothness of operation		OEM Manual	(✓)YES ( ) NO
	Check swing drive static parking brake for proper operation Caution: DO NOT stop the swing of the crane with this static brake (parking brake)		OEM Manual	(✓)YES ( ) NO
	Check swing drive dynamic parking brake for proper operation		OEM Manual	(✓)YES ( ) NO
	Check swing lock mechanism condition; corrosion ,dent , loos all part,worn and wear		OEM Manual	( )YES ( ) NO As found condition: Good
	Check swing lock mechanism freely lock and unlock for function. **Check and inspect for hydraulic for leaks on actuator model.**		OEM Manual	(✓)YES ( ) NO As found condition: Good
	Check condition of slew ring bolts e.g. Bolt grade and washers. Caution: Use only hardened flat washers under head of bolt. Do not use lock washers, or regular flat washers.		Industry Standard	(✓)YES ( ) NO As found condition: Good
	Monitor ball-ring grease sample. If found wear and tear particles, take sample and send to lab. **Wear assessment by grease sample analysis—wear may be monitored by periodic grease sample analysis as describe in this section. Grease samples should be collected every twelve months as a minimum and the results of the analysis recorded; this period should be shortened if obvious metal or contaminants are present.		API RP 2D	( )SEND TO LAB (✓) NOT SEND TO LAB As found: No Contaminants
	Check ball ring bolts torque (For American Aero ONLY) : After 3-4 hours, or initial "Run-in", and after every 500 operating hours, re-torque all of the bolts. Annually, or AFTER 2,000 Hours of Operation, re-torque the bolts. Criteria: If one or more bolts are found to be tightened to less than 80% of the prescribed pre-stress, that loosen bolt (s) should be replaced, in addition to the two adjacent bolts. If 20% of the total number of bolts are found to tightened to less than 80% of the prescribed pre-stress, replace all bolts.(Pre - Load)		Company Spec/Standard	(✓)YES ( ) NO

[redacted] / 27 Jan 25.

SYSTEM	TASK		Specification	Record/Reading
Revise		1236 ft-lbs	OEM Manual	✓ YES ( ) NO
Revise		1236 ft-lbs	OEM Manual	✓ YES ( ) NO
	Check slew pinion back lash clearance, and record:		OEM Manual	
	RECORD MEASSUREMENTS: 0.019" Min/ 0.030" Max	0-North	OEM Manual	0.020 inch
		45-Northeast	OEM Manual	0.019 inch
		90-East	OEM Manual	0.019 inch
		135-Southeast	OEM Manual	0.020 inch
		180-South	OEM Manual	0.022 inch
		225-Southwest	OEM Manual	0.019 inch
		270-West	OEM Manual	0.021 inch
		315-Northwest	OEM Manual	0.022 inch
	RECORD SLEW RING INFORMATION :	Manufacturer:	OEM Manual	Rotek
		Model:	OEM Manual	
		Serial Number:	OEM Manual	420172-F9
	TORQUE WRENCH RECORD:	Torque Wrench S/N:	Industry Standard	8D3R250A
		Calibration Date:	Industry Standard	–
	Perform ball ring deflection readings to check for bearing wear and record reading in below chart:		API RP 2D	✓ YES ( ) NO

Explain reason for No Bearing Deflection Reading: (IF N/A)		Applicable for Nautilus ONLY				
Boom Position	Boom Rest	Water Side	180 Degrees From Boom Rest	180 Degrees from Water Side	Grease Samples Positions	
0-North	0.0	0.0	0.0	0.0	0	
45-Northeast	0.002	0.009	0.007	0.002	45	
90-East	0.012	0.010	0.013	0.010	90	
135-Southeast	0.020	0.019	0.019	0.019	135	
180-South	0.025	0.021	0.024	0.022	180	
225-Southwest	0.013	0.013	0.017	0.012	225	
270-West	0.010	0.012	0.018	0.010	270	
315-Northwest	0.005	0.010	0.009	0.012	315	
360-North	0.0	0.0	0.0	0.0	360	

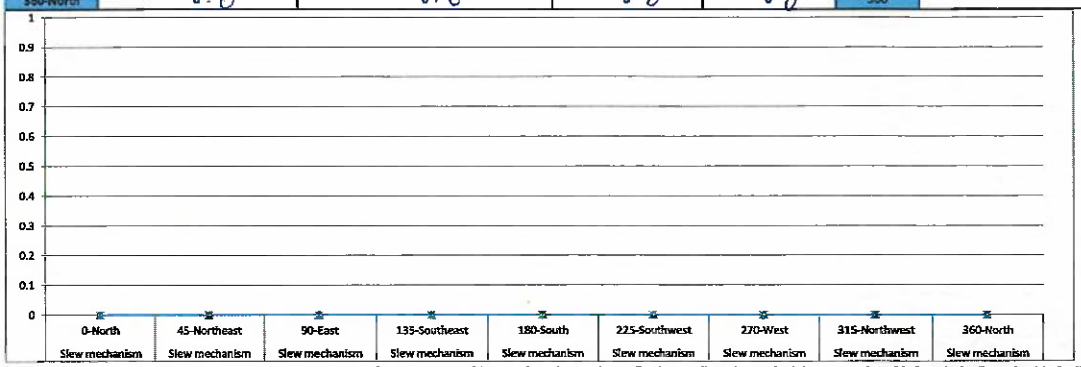

NOTE: This Procedure is in reference to API RP 2D 6th Edition (Section: C.4.1.2d) in regards to the Bearing Deflection reading. The Method documented on this form is the "Rotation Method" as described in detail in the API RP 2D

Review with previous PM inspection report for signs of irregularities or increased wear.		API RP 2D	✓ YES ( ) NO
The permissible bearing wear for the swing bearing to be used as a guideline ** Note ; (if the initial bearing clearance (bearing defection) is not know the absolute maximum permissible clearance(or wear) for the bearing is: 0.120 inch (3.05 mm)	< 0.134 inch	OEM Manual	0.028 inch
Verify crane condition and load test as separate procedure.		API 2C	✓ YES ( ) NO Specific test load 6500 lbs.
Verify crane condition and load test as separate procedure. " Record crane load test in load test form."		Company Standard	✓ YES ( ) NO

Table 1—Static/Onboard Test Load and Radius

Static/Onboard Rated Load at a Specific Radius lb (kg)	Test Loads in Excess of Static/Onboard Rated Load at a Specific Radius
≤ 40,000 (18,144)	25 %
> 40,000 ≤ 100,000 (>18,144 ≤ 45,356)	10 000 lb (4536 kg)
> 100,000 (45,356)	10 %

Risk Level Definitions: The following 3 levels indicate the impact the noted deficiency poses to the operation or structural integrity of the equipment:

Level 1 = Incidental	Level #2 = Restricted Operation	Level #3 =Out of Service
Minor deficiency that is recommended to be promptly addressed, but poses no safety and/or environmental risk. The crane can still be operated at full duty.	Deficiency identified that has the potential to limit, de-rate or damage the crane, its surroundings and/or the environment. The duty and locked/ tagged out until the crane's duty and operation should be de-rated or service restricted.	The crane should be removed from duty and locked/ tagged out until the deficiency is rectified.

System:	Risk Level:	Component:		In Accordance with:	
		Location:		Date Originated:	
Description:					
Recommended Action:					

[redacted] / 29 Jun 25

File

SYSTEM	TASK		Specification		Record/Reading
Recommended urgency timeframe for corrective action:		Completed Date:		Completed By:	

System:	Risk Level:	Component:		In Accordance with:	
		Location:		Date Originated:	19 June 25
Description:	Aux wire rope broken 1 wire				
Recommended Action:					
Recommended urgency timeframe for corrective action:	Keep Monitor.	Completed Date:		Completed By:	

System:	Risk Level:	Component:		In Accordance with:	
		Location:		Date Originated:	
Description:					
Recommended Action:					
Recommended urgency timeframe for corrective action:		Completed Date:		Completed By:	

System:	Risk Level:	Component:		In Accordance with:	
		Location:		Date Originated:	
Description:					
Recommended Action:					
Recommended urgency timeframe for corrective action:		Completed Date:		Completed By:	

System:	Risk Level:	Component:		In Accordance with:	
		Location:		Date Originated:	
Description:					
Recommended Action:					
Recommended urgency timeframe for corrective action:		Completed Date:		Completed By:	

System:	Risk Level:	Component:		In Accordance with:	
		Location:		Date Originated:	
Description:					
Recommended Action:					
Recommended urgency timeframe for corrective action:		Completed Date:		Completed By:	

Job Completed By

[redacted]

26 June 2025

WO: 1255723

Sheet: 180B1-80 (MS)CH4

CRANE MAKE: Nautilus — 1y Crane PM

MODEL: 180B1-80 (MS)

SERIAL NUMBER: Crane Specific

LOCATION: BEWO — C2, Remote Platform

DATA BASE - PM JOB TASK CARD

Crew Size: 4

Estimated Hours:

SYSTEM	TASK		Specification	Recorp/Reading
Safety	Perform Job Safety Analysis (JSA)		Company Spec/Standard	(✓) YES ( ) NO
	Obtain "COMPANY" PERMIT TO WORK		Company Spec/Standard	(✓) YES ( ) NO
	Perform Tool Box Talk		Company Spec/Standard	(✓) YES ( ) NO
	BEFORE/AFTER JOB EXECUTION: Ensure to comply with isolation procedure (LOCK OUT/TAG OUT, WARNING SIGNS and BARRIERS).		Company Spec/Standard	(✓) YES ( ) NO
Required Tools	Insure proper tools are available at the job site		Company Spec/Standard	(✓) YES ( ) NO
	Tool bag		Company Spec/Standard	(✓) YES ( ) NO
	Tool box		Company Spec/Standard	(✓) YES ( ) NO
	Tool Container		Company Spec/Standard	(✓) YES ( ) NO
	MPI equipment and operator		Company Spec/Standard	(✓) YES ( ) NO
	Check safety harness Software and Hardware should be good condition before use		Company Spec/Standard	(✓) YES ( ) NO
	Check Rescue Equipment ready to use onsite		Company Spec/Standard	(✓) YES ( ) NO
	Portable Scaffolding and Crew if require		Company Spec/Standard	(✓) YES ( ) NO
Lubricants	Insure proper lubricants and consumables are available at the job site.		Company Spec/Standard	(✓) YES ( ) NO
	Hydraulic System - Hydraulic Oil	Rando HD-68	OEM Manual	(✓) YES ( ) NO
	Slew Gearbox - Gear Oil	Meropa 220	OEM Manual	(✓) YES ( ) NO
	Auxiliary Hoist - Gear Oil	Meropa 220	OEM Manual	(✓) YES ( ) NO
	Main Hoist - Gear Oil	Meropa 220	OEM Manual	(✓) YES ( ) NO
	Grease Points - Lithium Based **IT MUST NOT INCLUDE MOLYBDENUM DISULPHIDE**	MULTIFAK EP#2	OEM Manual	(✓) YES ( ) NO
	Open Gear Teeth - Open Gear Lube highly water resistant and of an adhesive nature.	OMEGA 73	OEM Manual	(✓) YES ( ) NO
	Pneumatic Lubricator	SAE Grade 10	OEM Manual	( ) YES (✓) NO
	Wire rope Lubricant Company preferred grade	Birlube 70	OEM Manual	(✓) YES ( ) NO
	Engine Oil - SAE Grade 15W-40 (Delo Gold)	15W-40	OEM Manual	(✓) YES ( ) NO
	Safe Load Indicator fluid	W-15	OEM Manual	(✓) YES ( ) NO
	Engine Radiator - Should have radiator preservatives additives	Cat® SCA	OEM Manual	(✓) YES ( ) NO
Consumables	Spray Cold Galvanize		Company Spec/Standard	(✓) YES ( ) NO
	Denso Tape		Company Spec/Standard	(✓) YES ( ) NO
	WD-40		Company Spec/Standard	(✓) YES ( ) NO
History Review	Before starting work, tasks preparation at least 1 day prior to starting work: 1. Review history PM/ CM from Roving Team, 2. Review last PM/ CM/ PMI from Crane Mech, 3. List out all punch list and prepare parts. 4. Review last Certificate task performed		API RP 2D	(✓) YES ( ) NO
	Require to update part history from Crane Mech on following main compenents to ensure the right parts are prepared: - Aux/ Main/ Boom Cylinder, Engine, Swing Gearbox, etc. Reference: Crane OEM information of each part need to be recorded - Manufacturer & Contact info - Model & serial number - Installation date		Company Spec/Standard	(✓) YES ( ) NO
	Review history data from Certificates and incorporate into current PM: - Pull Test Certificates (ongoing update, 4 yr. history). - Load Test Certificates (ongoing update, 4 yr. history). - Wire Rope Certifications (running rope and standing rope) (life of rope). - Hoist Certifications for hoist classified as "personnel handling" hoist.		API RP 2D	(✓) YES ( ) NO
	Review Last Preventative Maintenance Records (Inspection Reports) - Pre-use (Pre-Post Inspection) - 6 Monthly (API RP 2D Not Defined, Company Standard) - 1 Yearly (API RP 2D Defined Annual Inspection)		API RP 2D	(✓) YES ( ) NO
Lifting Gear Preparation	Visually Inspect (Sling, sling hooks and shackles) include Websling / Chain		Company Spec/Standard	(✓) YES ( ) NO
	Check color code / Tag & date inspection		Company Spec/Standard	(✓) YES ( ) NO
General	Determine if access route to-from crane is clean, safe, unobstructed and adequately protected against falls, tripping and slipping		Company Spec/Standard	(✓) YES ( ) NO
	Check drain lines and drip pans for deterioration		API RP 2D	(✓) YES ( ) NO
	Remove any sediment collected in the bottom of drip pans		Industry Standard	(✓) YES ( ) NO
	Check for general crane and components for loss of protective coating and corrosion		Industry Standard	(✓) YES ( ) NO
	Check for missing or loose ,corrosion, deformation pins, pin keepers, bolts, nuts, fasteners of all laders, cages and working platform		API RP 2D	(✓) YES ( ) NO
	Apply grease to exposed grease parts (control valve spools, ball-ring gear, parking brake valve, etc.)		OEM Manual	(✓) YES ( ) NO
Prime Mover	Engine Caterpillar		OEM Manual	( ) YES ( ) NO
	CATERPILLAR MODEL ~~3216~~ 3126	S/N.:	OEM Manual	—
		ARR.No.:	OEM Manual	—
	Check lube oil level and condition, top up / replace if required		OEM Manual	(✓) YES ( ) NO
	Check diesel tank level, top up if required.		OEM Manual	(✓) YES ( ) NO
	Check/Clean crankcase breather		OEM Manual	(✓) YES ( ) NO
	Check/Clean air cleaner		OEM Manual	(✓) YES ( ) NO
	Check Condition of radiator / clean radiator cap		OEM Manual	(✓) YES ( ) NO
	Check for any signs of leaks on or around the engine ie; Crankshaft seal (front /rear)		OEM Manual	(✓) YES ( ) NO
	Check for engine exhaust system for leaks, corrosion, insulation and general condition		OEM Manual	(✓) YES ( ) NO
	Check all engine hoses for wear and deterioration		OEM Manual	(✓) YES ( ) NO
	Drain water and sediment form diesel tank		OEM Manual	(✓) YES ( ) NO
	Clean Diesel tank level sightglass		OEM Manual	(✓) YES ( ) NO
	Lubricate fan bearing/shaft		OEM Manual	(✓) YES ( ) NO
	Change Radiator Coolant		OEM Manual	(✓) YES ( ) NO
	Test radiator Coolant PH, Top up if required and Record Value		OEM Manual	(✓) YES ( ) NO
	COOLANT PARAMETERS (PH):	6 or higher	OEM Manual	PH = 9
	HOUR METER PARAMETERS;	LAST READING 7173 HRS	OEM Manual	7309 HRS
	Check condition of engine hold down bolts		OEM Manual	(✓) YES ( ) NO
	Check condition fan blade		OEM Manual	(✓) YES ( ) NO
	Change cooling fan drive belts		OEM Manual	(✓) YES ( ) NO
	Inspect CAT 3126 engine belts for wear and looseness. If necessary, replace or adjust. To check belt Tension, after has engine run more than 30 minules apply 400 N (90 lbs) of force midway between the pulleys. Correctly adjusted belts with deflect 13 to 19 mm (1/2 to 3/4 inch).		OEM Manual	(✓) YES ( ) NO

File

SYSTEM	TASK			Specification	Record/Reading
	Check engine HYD starter drive gear bendix and fly wheel gear teeth condition and record. **Replace if required"			OEM Manual	(✓) YES ( ) NO Bendix Gear : 75 % Fly wheel gear teeth : 89 %
	Check condition Rachet Bendix HYD Starter			OEM Manual	(✓) YES ( ) NO
	Lubricate and check engine throttle system.			OEM Manual	(✓) YES ( ) NO
	Determine if the tachometer operates properly: Record Value of Idle & Max Speed (RPMs) Note: Too low Idle (RPMS) will cause excessive worn at winch brake			OEM Manual	
	ENGINE RPM SPECIFIC	IDLE SPEED	850-950 RPM	OEM Manual	850 RPM
		MAX SPEED	2200 RPM	OEM Manual	2200 RPM
	Confirm engine oil pressure as per Parameters below and Record Value:			OEM Manual	
	ENGINE OIL PRESSURE SPECIFIC	Minimum	30 PSI	OEM Manual	40 PSI
		Maximum	70 PSI	OEM Manual	70 PSI
	Confirm engine fuel pressure Parameters are correct and Record Value:			OEM Manual	
	ENGINE FUEL PRESSURE SPECIFIC** ***Note;Fuel pressure at high idle is lower than 105 kPa (15 psi)RAMETERS*	Normal	Green Range/ 15 PSI	OEM Manual	(✓) YES ( ) NO
	Confirm engine temperature Parameters and Record Value:			OEM Manual	
	ENGINE WATER TEMP SPECIFIC	NORMAL	120 - 180 degrees F	OEM Manual	170 F
	Test engine SAFETY DEVICE- ensure engine kill cable shuts off FUEL supply			API RP 2D	(✓) Function ( ) False
	Test engine SAFETY DEVICE- ensure EMERGENCY KILL CABLE - shuts off AIR supply			API RP 2D	(✓) Function ( ) False
	Test engine SAFETY DEVICE- ensure ENGINE low lube oil - releases OIL PRESSURE to ctivate Alarm Air System ****Note*** Engine oil pressure low alarm at 20 PSI*			Company Spec/Standard	(✓) Function ( ) False
	Test engine SAFETY DEVICE- ensure HIGH TEMP - releases OIL PRESSURE to **activate Alarm Air System**			Company Spec/Standard	(✓) Function ( ) False
	Check / Clean primary fuel/water separator *Replace if required*			OEM Manual	(✓) YES ( ) NO
	Check condition of turbocharger, and for any oil or hot air leaks			OEM Manual	( ) Leak (✓) Not Leak
	Change engine lube oil and oil filter			OEM Manual	(✓) YES ( ) NO
	Change fuel filter			OEM Manual	(✓) YES ( ) NO
	Change air filter, if required			OEM Manual	(✓) YES ( ) NO
	Check fuel injection pump,governor for any leak and noise			OEM Manual	(✓) YES ( ) NO
	Check/Adjust engine lash valve, inspect valve rotators valve clearance (IN = 0.015", EXT = 0.025")			OEM Manual	(✓) YES ( ) NO
	Check Fuel Timing of Unit Injector (CAT 3126) Reference: Fuel timing injection length, use the following references to obtain information: - Engine Information Plate (located at valve cover) - TMI (Technical Marketing Information - located at Manual Book) - Fuel setting and related Information Fiche			Company Spec/Standard	- mm/ inch (After Adjustment)
	Check Damper of Crank Shaft Pulley (CAT Engine 3126)			OEM Manual	(✓) YES ( ) NO
	Change gasket valve cover			Company Spec/Standard	(✓) YES ( ) NO
	Test/Exchange fuel injection nozzle, if required. Require inspection record for tracking.			Company Spec/Standard	(✓) Function ( ) False
	Rebuild or replace Starter motor, if required. Require inspection record for tracking.			Company Spec/Standard	(✓) YES ( ) NO
	Rebuild or d replace Water pump, if required. Require inspection record for tracking.			Company Spec/Standard	(✓) YES ( ) NO
	Rebuild or replace Turbo charger, if required. Require inspection record for tracking.			Company Spec/Standard	(✓) YES ( ) NO
	Check and Inspect condition wear of pump drive spline and record ***Note; Remaining 70% of Original Spline Surface must be replace.*			Company Spec/Standard	98 % Remaining
	Check and Inspect condition wear of adaptor Coulping spline shaft and record ***Note; Remaining 70% of Original adaptor Coulping spline shaft Surface must be replace.*			Company Spec/Standard	98 % Remaining
	Check and Inspect condition wear and crack of Coulping Drive Plate			Company Spec/Standard	90 % Remaining
	Retorque bolts of Coupling Drive Plate			OEM Spec/Standard	(✓) YES ( ) NO
	Evaluate engine performance, tune up if required			Company Spec/Standard	(✓) YES ( ) NO
Hydraulic Start System (Apply for C2-Remote P/F Only)	**Check pressure system** at the pressure gauge which should reach 3,000 PSI as standard when the system is FULLY charged. Record Value. (As the system cools down, the pressure should drop slightly and finally stabilised.)			OEM Manual	(✓) YES ( ) NO
	Visually inspect all hydraulic connections and hoses for leaks and retighten if necessary. (Caution: This should NOT be done if the system is under pressure.) 1. Slowly release system pressure by loosening the bleed screw on top of the hand pump. 2. Ensure no pressure remains, retighten the suspected leak fitting or replace the damaged hose or component. 3. Retighten the bleed screw on the hand pump. 4. Pump the system up to 2200 - 2600 PSI 5. Inspect that the leak was eliminated.			OEM Manual	(✓) YES ( ) NO
	Function check Accumulator Pre-charge. (Caution: This should NOT be done if the system is under pressure.) 1. Shut the engine off, release system pressure via the bleed screw on top of the hand pump 2. Retighten bleed screw and actuate the hand pump. The pressure will rapidly increase and then stabilised. This pressure is related to accumulator gas pre-charge pressure. 4. If the pressure rapidly increase to 3000 PSI, it indicates that the accumulator has lost its gas charge. 5. Troubleshoot as necessary			OEM Manual	(✓) YES ( ) NO
	Check function rechaging system by function boom down while the engine running. 1. The crane engine is running at 1,000-1500 RPM. 2. Slowly control lever boom function down for charging pressure to accumulator. 3. This pressure should read on prssure gauge between 2200 - 2600 PSI depending on the recharge ratio 80% std. (90% optional). Record Pressure Value.			OEM Manual	2800 PSI
	Check Nitrogen pressure in Accumulator ***Note**spec @ 1,500 psi as follow schematic and if found pressure loss below 1400 PSI then prepare recharge nitrogen in system			OEM Manual	1500 PSI
Pneumatic System	check for noisy compressor operation, which could indicate a worn drive gear coupling, a loose pulley or excessive internal wear			Company Spec/Standard	(✓) YES ( ) NO

SYSTEM	TASK			Specification	Record/Reading
	Check Air Compressor external oil supply and return lines, if applicable, for kinks, bends, or restrictionsto flow			Company Spec/Standard	(✓) YES ( ) NO
	Inspect the Air compressor discharge port, inlet cavity and discharge line for evidence of restrictions and carboning. (If excessive buildup is noted)			Company Spec/Standard	(✓) YES ( ) NO
	Check all hose connections are sound and all mounting and pivoting connections are secure.			Industry Standard	(✓) YES ( ) NO
	Check condition / Clean and lubricate unloading valve			Industry Standard	(✓) YES ( ) NO
	Check proper air pressure is available for the system. Record Value.			OEM Manual	
	AIR SYSTEM PARAMETERS:	MAX 60 PSI		OEM Manual	60 PSI
	Visually inspection condition of air receiver for signs of corrosion or loose of structural integrity.			Industry Standard	(✓) YES ( ) NO
	Check the hose, piping and tubing for mechanical damage, corrosion, splits, blisters, cracking or excessive abrasion on the outer surface			Industry Standard	(✓) YES ( ) NO
	Drain off air filter and reciever to remove condensed water. If water is present, drain until water is removed.			Industry Standard	(✓) YES ( ) NO
	Check proper operation of pop off valve, by manually functioning valve.			Industry Standard	(✓) YES ( ) NO
	Check proper operation of manual latch valve, by manually functioning latch.			Industry Standard	(✓) YES ( ) NO
	Check proper operation of small engine alarm horn.			Industry Standard	(✓) YES ( ) NO
Hoist / Brakes	Visually check a hoist exhibits erratic operation and/or unusual noise, the hoist must be taken out of service until it is inspected and serviced by a qualified technician. Continued operation of a hoist with a defect in a critical component may lead to loss of load control, property damage, serious injury or death.			OEM Manual	(✓) YES ( ) NO
	Visual exteriors of hoist, frames, drums and flanges for damage, leaks, cracks and wear and repair/replace as required to maintain the structural integrity of the hoist.			OEM Manual	(✓) YES ( ) NO
	Check all hoist mounting pins, bolts or other fasteners and replace or tighten as necessary.			OEM Manual	(✓) YES ( ) NO
	Lubricant level must be maintained between the minimum and maximum levels; midway up sight glass or at bottom of level plug port as equipped and check/clean plug vent. Use only the recommended type of lubricant.			OEM Manual	(✓) YES ( ) NO
	Inspect Brake Valve Opening Pressure test V/V 1-1/4" PD Series : no lower than 550 PSI	Aux		Braden Bulletin 527-Dec,1996	550 PSI
	Inspect Brake cylinder opening pressure test. CH/PD Series : 400-450 PSI	Aux		Industry Standard	350 PSI
	Measure differancian of static and dynamic brake. CH/PD Series : 150-250 PSI	Aux		Industry Standard	200 PSI
	Check for external oil leaks and repair as necessary. This is extremely important due to the accelerated wear that will result from insufficient lubricating oil in the hoist.			OEM Manual	(✓) YES ( ) NO
	RECORD BOOM CYLINDER INFORMATION :	Boom cylinder Diameter:		OEM Manual	DIA: 12 Inch
		CY Number:		OEM Manual	L= 78929 R= 78912-6
		Serial Number:		OEM Manual	L= 5035 R= 5032
	RECORD MAIN HOIST INFORMATION :	Manufacturer:		OEM Manual	Braden
		Model:		OEM Manual	CH19A-23090-08-1
		Serial Number:		OEM Manual	09009266
	Check MAIN HOIST for proper operation and good condition			API RP 2D	(✓) YES ( ) NO
	Brake test & record pressure of MAIN HOIST			OEM Manual	(✓) YES ( ) NO
	Check MAIN HOIST gear oil level/condition, top up if required. ** Refer to Onsite Gear Oil Sample Procedure ** ** Replace and send oil sample to SKL if abnormal ** ** Take photo of Oil Sampling for Reference**			OEM Manual	(✓) YES ( ) NO
	Change main hoist gear oil			OEM Manual	(✓) YES ( ) NO
	RECORD AUXILIARY HOIST INFORMATION :	Manufacturer:		OEM Manual	Braden
		Model:		OEM Manual	PD12C-29064-04-1
		Serial Number:		OEM Manual	0662702
	Check AUXILIARY HOIST for proper operation and good condition			API RP 2D	(✓) YES ( ) NO
	Brake test & record pressure of AUXILIARY HOIST			API RP 2D	(✓) YES ( ) NO
	Check AUXILIARY HOIST gear oil level/condition, top up if required. ** Refer to Onsite Gear Oil Sample Procedure ** ** Replace and send oil sample to SKL if abnormal ** ** Take photo of Oil Sampling for Reference**			OEM Manual	( ) SEND SKL LAB (✓) NOT SEND SKL LAB
	Change auxiliary hoist gear oil			OEM Manual	(✓) YES ( ) NO
	Check Relief Valve: Determine hoistes' relief valve pressure gauge is working and giving accurate measurement by notice whether pressure gauge is vibrating or not. If not, set relief valve pressure in accordance with the schematic and parameters below. Record all readings.			OEM Manual	(✓) YES ( ) NO
	BOOM RELIEF VALVE TEST	Relief Specific:	3,000 PSI	OEM Manual	3000 PSI
	MAIN HOIST RELIEF VALVE TEST	Relief Specific:	3085 ~~3,065 PSI~~	OEM Manual	3085 PSI
	AUX HOIST RELIEF VALVE TEST	Relief Specific:	2,800 PSI	OEM Manual	2800 PSI
	SWING RELIEF VALVE TEST	Relief Specific:	1500 ~~1,300 PSI~~	OEM Manual	1500 PSI
	Measure Pressure of hoist motor case drains and Record Value Reference Bulletin: BRADEN Inspection, Testing, Preventive Maintenance and Special Operating Instructions For Planetary Hoists PB-308 latest edition for further details.			OEM Manual	
	MAIN HOIST CASE DRAIN for Gear Motor (Down Mode).	PRESSURE	< 100 psi	Company Spec/Standard	15 PSI
	AUX. HOIST CASE DRAIN for Gear Motor (Down Mode).	PRESSURE	< 100 psi	Company Spec/Standard	12 PSI
Hydraulic System	Check hydraulic tank oil level. Oil should be visible in the sight glass. Top up as required (3/4 Tank Minimum)			OEM Manual	(✓) YES ( ) NO
	Check hydraulic oil condition. (Check if running hours are more than 100 hours from last oil change or during Annual inspection) ** Refer to Onsite Hydraulic Oil Sample Procedure ** ** Replace and send oil sample to SKL if abnormal ** ** Take photo of Oil Sampling for Reference**	Rando HD-68		Company Spec/Standard	( ) SEND SKL LAB (✓) NOT SEND SKL LAB
Hydraulic System	Drain off 1 liter of oil to remove condensed water. If water is present, drain until water is removed and top up with clean oil			Industry Standard	(✓) YES ( ) NO
	Check for any hydraulic leaks			Industry Standard	(✓) YES ( ) NO
	Check the hydraulic hose, piping and tubing for mechanical damage, corrosion, splits, blisters, cracking or excessive abrasion on the outer surface			API RP 2D	(✓) YES ( ) NO

Fax

SYSTEM	TASK				Specification	Record/Reading
	Check that all hydraulic hose connections are sound and that all mounting and pivoting connections are secure.				Industry Standard	(✓) YES ( ) NO
	Lubricate hydraulic swivel in pedestal and insure tie down restrains are in place and preventing the swivel from rotating with the crane structure.				OEM Manual	(✓) YES ( ) NO
	Ensure the filler breather on tank is not covered or clogged				Industry Standard	(✓) YES ( ) NO
	Visually inspect for missing or loose pins, pin keepers, bolts, nuts, fasteners on all pumps, motors and valves				API RP 2D	(✓) YES ( ) NO
	Check the filter bypass indicator, while engine is running				OEM Manual	(✓) YES ( ) NO
	With engine running (after all other items pass inspection), check the system for leaks around fittings, hoses, valves and reservoirs				Industry Standard	(✓) YES ( ) NO
	With engine running, check the source of any unusual noise or vibration that may cause or indicate equipment damage or wear				Industry Standard	(✓) YES ( ) NO
	Ensure all hoses are properly rated for the system, see "Parameters" for each system for details.				Industry Standard	(✓) YES ( ) NO
	Record hydraulic oil operating temperture. Note: Hydraulic fluid overheating temperature is over 180 F degrees or 82 C, degrees (reservoir temperature)				Industry Standard	130 Degree F
	Determine if hydraulic return pressure gauge is working and giving accurate measurements. Record readings					
	RECORD HYDRAULIC RETURN PRESSURE PARAMETERS:			60 PSI "maximum"	OEM Manual	15 PSI
	Change hydraulic return filters and seals				OEM Manual	(✓) YES ( ) NO
	Function Testing and record pressures with engine at :			2,200 RPM	API RP 2D	
	BOOM FUNCTION TEST (Need Crane Mech to verify each platform)				OEM Manual	
	Boom Angle : 60 Degree (Recommend or as applicable)	UP	Cracking pressure	RECORD	OEM Manual	600 PSI
			Full Speed Pressure	RECORD	OEM Manual	800 PSI
		DOWN	Cracking pressure	RECORD	OEM Manual	800 PSI
			Full Speed Pressure	RECORD	OEM Manual	1900 PSI
	MAIN HOIST FUNCTION TEST (Need Crane Mech to verify each platform)				OEM Manual	
	Boom Angle : 60 Degree (Recommend or as applicable)	UP	Cracking pressure	RECORD	OEM Manual	100 PSI
			Full Speed Pressure	RECORD	OEM Manual	400 PSI
		DOWN	Cracking pressure	RECORD	OEM Manual	500 PSI
			Full Speed Pressure	RECORD	OEM Manual	1100 PSI
	AUX HOIST FUNCTION TEST (Need Crane Mech to verify each platform)				OEM Manual	
	Boom Angle : 60 Degree (Recommend or as applicable)	UP	Cracking pressure	RECORD	OEM Manual	200 PSI
			Full Speed Pressure	RECORD	OEM Manual	<100 PSI
		DOWN	Cracking pressure	RECORD	OEM Manual	600 PSI
			Full Speed Pressure	RECORD	OEM Manual	1800 PSI
	SWING FUNCTION TEST (Need Crane Mech to verify each platform)				OEM Manual	
	Boom Angle : 60 Degree (Recommend or as applicable)	LEFT	Cracking pressure	RECORD	OEM Manual	200 PSI
			Full Speed Pressure	RECORD	OEM Manual	<100 PSI
		RIGHT	Cracking pressure	RECORD	OEM Manual	200 PSI
			Full Speed Pressure	RECORD	OEM Manual	<100 PSI
Electrical system, Crane Boom Lighting and red obstruction light	Check the electrical junction boxes, wires and connections for deterioration, desiccant bags, (replace as required)				Industry Standard	(✓) YES ( ) NO
	Check the condition of the grounding and lighting protection system.				Company Spec/Standard	(✓) YES ( ) NO
	Visually inspect boom floodlight and light guards for loose, missing, corroded				Company Spec/Standard	(✓) YES ( ) NO
	Check condition pipe support , U-bolt ,nuts of boom floodlight and Electric slipring for loose , missing , corroded				Company Spec/Standard	(✓) YES ( ) NO
	Check Electric slipring/swivel for 360° continuous rotation				OEM Munnal	(✓) YES ( ) NO
	Check Water ingress, condensation in electric slipring, red obstruction light and boom floodlight				OEM Munnal	(✓) YES ( ) NO
	Check feely movement and lubricate of boom floodlight				OEM Munnal	(✓) YES ( ) NO
	With generator in operation, Intergize all lights to unsure proper function.				API RP 2D	(✓) YES ( ) NO
	Check condition of crane boom lighting and safety net is secured with strong point. * **Safety net should be replace 24 months after installation (2 year)***			Last installation date _____	Company Spec/Standard	(✓) YES ( ) NO
	Check function of crane sound signal				Company Spec/Standard	(✓) YES ( ) N/A ( ) NO
	Check function of crane boom lighting at boom upper section				Company Spec/Standard	(✓) YES ( ) N/A ( ) NO
	Check function of crane boom lighting at boom lower section				Company Spec/Standard	(✓) YES ( ) N/A ( ) NO
	Check function of crane boom lighting at winch skid				Company Spec/Standard	(✓) YES ( ) N/A ( ) NO
	Check function of crane boom lighting at crane cabin				Company Spec/Standard	( ) YES (✓) N/A ( ) NO
	Check function becon light at boom tip				Company Spec/Standard	( ) YES (✓) N/A ( ) NO
	Inspection wire rope guide & Roller assembly				Company Spec/Standard	(✓) YES ( ) NO
	Visually inspect red obstruction light pipe support, u-bolts, nuts connection to hand rail for loose, missing, corroded				Company Spec/Standard	(✓) YES ( ) NO
	Visually inspect safety sling attached to the red obsruction light and its base for loose, missing, corroded				Company Spec/Standard	(✓) YES ( ) NO
	Visually inspect red obstruction light function. The light is designed to turn on all the time.				Company Spec/Standard	(✓) YES ( ) NO
Operator Control Station	Check general condition of control panel, bolts, paint security, etc.				API RP 2D	(✓) YES ( ) NO

SYSTEM	TASK	Specification	Record/Reading
	Determine if there is a serviceable fire extinguisher in the vicinity of the crane	Company Spec/Standard	(✓YES ( ) NO
	Determine if correct load chart is in use and easily visible for operator	API RP 2D	(✓YES ( ) NO
	Determine if charts, indicators and hand signal chart are in the cabling and firmly attached	API RP 2D	(✓YES ( ) NO
	Determine if angle/radius indicator plate is easily visible to operator and is moving freely.	API RP 2D	(✓YES ( ) NO
	Check condition of control levers and determine if they "dead-man" back to the neutral position.	API RP 2D	(✓YES ( ) NO
	Check condition of pressure gauges.	API RP 2D	(✓YES ( ) NO
	Check proper control labels are firmly installed, completely legible and properly labeled	API RP 2D	(✓YES ( ) NO
	Check controls for freedom-of-movement	API RP 2D	(✓YES ( ) NO
	Check condition , Leak, freely moement of Dynamic swing break system *** Note; If HYD Oil loose in CYD reservoir must be refill*	OEM Manual	(✓YES ( ) NO
	Check condition , Leak, freely moement of Accelerate System *** Note; If HYD Oil loose in CYD reservoir must be refill*	OEM Manual	(✓YES ( ) NO
	Check all safety glass and rubber seal for proper condition	API RP 2D	(✓YES ( ) NO
	Function Test Horn	Industry Standard	(✓YES ( ) NO
	Ensure PRE/POST Check List and Pocket Manual in the cabin	Company Standard	(✓YES ( ) NO
Load Indicator System	Visual check on fittings and connections for leaks. Fix leak if any.	OEM Manual	(✓YES ( ) NO
	Should any leaks exist, stop leak and recharge system, refer to maintenance manual	OEM Manual	(✓YES ( ) NO
	Change Load cell fluid	OEM Manual	(✓YES ( ) NO
	Check general condition of tubbing, hoses, pins bolts, paint, etc.	Industry Standard	(✓YES ( ) NO
	Insure load cell is free of obstructions	OEM Manual	(✓YES ( ) NO
	Check condition of gauge(s) face and clean glass as required.	OEM Manual	(✓YES ( ) NO
	Check weight indicator function (Main)	Company Spec/Standard	(✓YES ( ) NO
	Check weight indicator function (Aux)	Company Spec/Standard	(✓YES ( ) NO
	Check weight indicator fluid, top up if required	Industry Standard	(✓YES ( ) NO
	Insure Safe Working Load, matches ratings on the Crane Load Chart	OEM Manual	(✓YES ( ) NO
	Insure Boom Length, matches the Crane Load Chart	OEM Manual	(✓YES ( ) NO
	Insure Boom Angle measurements and readings match the boom angle indicator.	OEM Manual	(✓YES ( ) NO
	Insure Boom Radius measurements indicate the distance from center line of the crane to the hook	OEM Manual	(✓YES ( ) NO
	Check Main load cell gap 1/4 (0.250) inch	OEM Manual	(✓YES ( ) NO
	Check Aux load cell gap 3/8(0.380) inch (Compression Load Cell Type)	OEM Manual	(✓YES ( ) NO
	Check weight indicator accuracy *maximum variance +/- 2%	Industry Standard	(✓YES ( ) NO
Pedestal & Structure	Visually check Pedestal for chipped/cracked paint, deformation, worn parts, dents, corroded areas, cracks weld, etc.	API RP 2D	(✓YES ( ) NO
	Check water rain drain at pedestal must be not obstuct	Industry Standard	(✓YES ( ) NO
	Check pin and cotter pin of pedestal missing , corrosion, wear, damage and exercise pin.	Industry Standard	(✓YES ( ) NO
	Visually check Base - Plate connection and Base hoist Structure for chipped/cracked paint, deformation, worn parts, dents, corroded areas, cracks weld, etc.	API RP 2D	(✓YES ( ) NO
	Check A fixed such as Handrial, Walkway, Grating, stationary structure without significant movement in response to waves and currents in normal operating conditions.	API RP 2C	(✓YES ( ) NO
	Visually check and lubricate maintenance Jib. ***Note*** If on pedestal crane	OEM Manual	(✓YES ( ) NO
	Check maintenance jib is secure firmly. ***Note*** If on pedestal crane	OEM Manual	(✓YES ( ) NO
Box Boom & Luffing CYD	Check and Verify entire box boom and Boom CYD for loss of protective coating and corrosion	API RP 2D	(✓YES ( ) NO
	Check and Verify entire box boom and Boom CYD for chipped/cracked paint, deformation, worn parts, dents, corroded areas, cracks, etc.	API RP 2D	(✓YES ( ) NO
	Check and Verify boom end connections, for bends, dents, corroded areas, cracked welds, and signs of mechanical damage, wear, etc. **any deviation should be reported**	API RP 2D	(✓YES ( ) NO
	Check and Verify boom rest and wooden support to ensure it's in good condition	API RP 2D	(✓YES ( ) NO
	Inspect pin and pin holes of Upper tank and Lower tank for excessive clearance	OEM Manual	(✓YES ( ) NO
	BOOM CYLINDER PIN MAXIMUM TOLERANCE — 1/8" (3mm)	Industry Standard	
	Check BOOM CYLINDERS for proper operation and good condition	API RP 2D	(✓YES ( ) NO
	Check Boom cylinder barrels and rods for leaks, mechanical damage and corrosion	Industry Standard	(✓YES ( ) NO
	Check and measurement boom foot pin and connection pins for clearance	Industry Standard	
	BOOM FOOT PINS & BOOM BOX CONNECTER PIN TOLERANCE — 1/8" (3mm)	Industry Standard	
	Boom Foot Pin Tolerance	Industry Standard	0.020 inch
	Boom Box Connecter Pin Tolerance	Industry Standard	0.015 inch
	Check connecting bolts of box boom loose, corrosion, wear, damage	OEM Manual	(✓YES ( ) NO
	Lubricate boom foot pins and bushings	OEM Manual	(✓YES ( ) NO
	Lubricate boom cylinder pins, bearings and bushings	OEM Manual	(✓YES ( ) NO
	Boom function test angle/radius to correction **Note; The cylinder(s) mechanism shall be capable of elevating the boom from a minimum of zero degrees to the maximum recommended boom angle.	API RP 2C	(✓YES ( ) NO
	Operation functional test and verify Boom Creeping down **Note ; Test at angle 60 °	Industry Standard	(✓YES ( ) NO
Wire Rope	Determine if parts-of-line match parts of line on the load chart in the crane cabin.	API RP 2D	(✓YES ( ) NO
	Determine if visible portion of wire rope adequately lubricated. If not lubricate wire rope	API RP 2D	(✓YES ( ) NO
	For each layer of wire rope on drum, check that all rope is parallel and each crossover point at hoist flanges is correct	API RP 2D	(✓YES ( ) NO
	The top layer of rope must not be lower to the flange tips 2.5 in for Smooth drum,2 in for groove drum or 2.5 times of wire rope diameter	API RP 2C	(✓YES ( ) NO
	Inspect wire rope for, kinking, crushing, broken wires, necking down of rope diameter, worn outside wires, corroded or broken wires at end connection, cutting or unstringing.	API RP 2D	(✓YES ( ) NO
	NoteRunning Ropes of rotation-resistant construction used in the main or auxiliary Hoist: - Four (4) Randomly distributed broken wires within 30 rope diameter - Two (2) broken wires in one stand within 6 rope diameter	API RP2D Edition 7	None
	One valley break can indicate internal rope damage requiring close inspection of this section of the rope. When one or more valley breaks are found in one lay length the rope should be retired.	API RP2D Edition 7	None

SYSTEM	TASK	Specification	Record/Reading
	Reductions for the rope diameter, from initial wire rope dimensional measurements, in a nonworking area (an area away from the sheaves) compared to the lowest diameter of rope measured in three working areas (areas where the rope regularly goes over a sheave) of more than the following is observed: — 3/64 in. (0.047 in.) (1.2 mm) for diameters up to and including 3/4 in. (19.1 mm); — 1/16 in. (0.062 in.) (1.6 mm) for diameters of 7/8 in. to 1-1/8 in. (22.2 mm to 28.6 mm); — 3/32 in. (0.093 in.) (0.8 mm) for diameter of 1-1/4 in. to 1-1/2 in. (31.8 mm to 38.1 mm); — For rope diameters greater than 1-1/2 in., a 5 % diameter loss from baseline measurement. —Wear of one-third the original diameter of the outside individual wires	API RP2D Edition 7	None
	Increase in the length of an individual rope lay is observed. This increase in lay length and accompanying reduction in diameter can be caused by failure of the core. This can occur more readily in ropes or rotation-resistant construction.	API RP2D Edition 7	(✓)YES ( ) NO
	-Inspection and Verify running and standing rope from heat effect **Note; Not more than 250°C -There is evidence of heat damage from any source (i.e. engine exhaust, flare towers, stress corrosion cracking, etc.). Heat can be generated by passing a rope over a frozen or non-turning sheave, contact with structural members of the crane, improperly grounded welding leads or lightning strikes	Industry Standard	(✓)YES ( ) NO
	With the boom at the highest possible angle and the main load block or overhaul ball at the water level, ensure there is a minimum of 5 wraps of wire-rope remaining on the drums. Note: (Thai law, requires minimum of 2 wraps)	API SPEC 2C / Thai Law	(✓)YES ( ) NO
	Reference: · Running rope safety factor not less than 6 for wire rope that are running wire, (Thai law; Wire rope nominal breaking strength x number parts of line / Design factor 6) · Standing rope safety factor not less than 3.5 for wire rope that are stay cables, (Thai law)	Thai Law	(✓)YES ( ) NO
	Inspection corrosion, erosion, broken, loosen of pin, cotter pin, socket, and exercise pin of pendent line	Industry Standard	(✓)YES ( ) NO
	Measure and record nominal diameter of "running ropes"main and auxiliary (particularly on drum, equalizer sheave and at sockets, clips and dead end points) ********Nominal = several measurements added together divided by Number of measurements*******	API RP 2D	(✓)YES ( ) NO
	Inspect wire rope and record size below:	API RP 2D	
	MAIN WIRE ROPE OD: — FULL DRUM	OEM Manual	0.630 inch
	MAIN WIRE ROPE OD: — HALF DRUM	OEM Manual	0.640 inch
	MAIN WIRE ROPE OD: — WATER LEVEL	OEM Manual	0.645 inch
	AUX WIRE ROPE OD: — FULL DRUM	OEM Manual	0.633 inch
	AUX WIRE ROPE OD: — HALF DRUM	OEM Manual	0.638 inch
	AUX WIRE ROPE OD: — WATER LEVEL	OEM Manual	0.642 inch
	Slip-Cut 1 meter of all ropes at the wedge socket and re-wedge to prevent rust inside of wedge socket (at outward end of rope, not on hoist drum) Dead end tail length is never less than 6 inches, or: - Standard 6 to 8 Strand wire rope is not less than 7 times the rope diameter - Rotation Resistant Wire Rope is not less than 20 times the rope diameter	Company Spec/Standard	(✓)YES ( ) NO
	U-bolt and Fist Grip Clips: Extreme care should be exercised to assure proper orientation of U-bolt clips. The U-bolt segment shall be in contact with the wire rope dead-end. The orientation, spacing, torquing, and number of all clips shall be in accordance with the crane manufacture's specifications.	API SPEC 2C	(✓)YES ( ) NO
	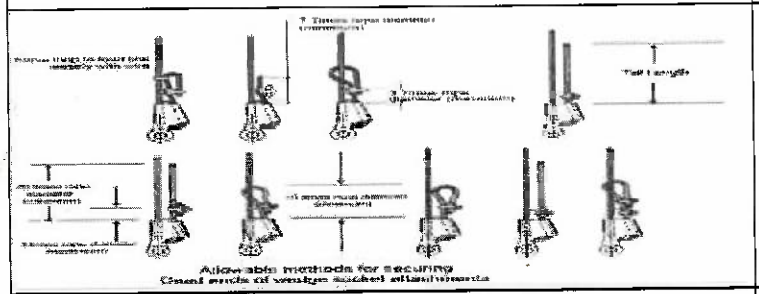	API SPEC 2C	OK
	Verify that the wedge socket and wedge are the correct size for the rope in use and record the size	API SPEC 2C	(✓)YES ( ) NO
Sheaves & Bearings	Lubricate all sheave bearings	API RP 2D	(✓)YES ( ) NO
	Visually inspect all sheaves and bushings for cracks, wear and deterioration	API RP 2D	(✓)YES ( ) NO
	Visually inspect wire rope track of sheave for rope imprints, wear and deterioration. If damage exist sheave should be resurfaced or replaced.	API RP 2D	(✓)YES ( ) NO
	Pins retained by snap rings, bolt lock shafts, plates lock should be checked for missing or loose for all	API RP 2D	(✓)YES ( ) NO
	Check wirerope guards and keepers for proper location and condition.	API RP 2D	(✓)YES ( ) NO
	Determine if wire rope is jumping the sheaves, by looking for signs of damage on the sheave brim	Industry Standard	(✓)YES ( ) NO
	Sheave Rope Profile for optimum Rope life the sheave groove profile should be correctly matched to the rope diameter	Industry Standard	(✓)YES ( ) NO
	Check rope sheave should be machine grooved to adepth of not less than 1.5 times the norminal diameter of the rope	Industry Standard	(✓)YES ( ) NO
	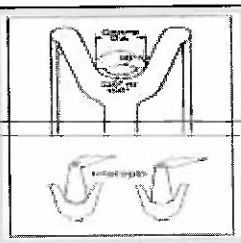 — MAIN POINT SHEAVES:	Industry Standard	Sheave No.1(✓)YES ( ) NO Sheave No.2(✓)YES ( ) NO
	AUX SHEAVES:	Industry Standard	Sheave No.1(✓)YES ( ) NO
	IDLER SHEAVES:	Industry Standard	Sheave AUX. (✓)YES ( ) NO Sheave Main(✓)YES ( ) NO

SYSTEM	TASK	Specification	Record/Reading
	Pins for bronze bushing and straight roller bearing should have a running clearnace of .031 inch/ sheave of end play and should be adjusted accordingly.(count from left)	Industry Standard	(✓) YES ( ) NO
	MAIN POINT SHEAVES:	Industry Standard	Sheave No.1 16 inch Sheave No.2 16 inch
	AUX SHEAVES:	Industry Standard	16 inch
	IDLER SHEAVES:	Industry Standard	Sheave AUX. 16 inch Sheave Main 16 inch.
	Ensure the sheaves are aligned and the fleet angle is correct **Remark ; Wire rope User's Manual allows 2 degree on grooved winch drum, Smooth Drum shuold be not more than 1-1/2 degree	API RP 2D	(✓) YES ( ) NO
	Determine if wire rope size and sheave sizes/grooves are compatible and record size. Sheave pitch diameter (D) to nominal wire rope diameter (d) ratio (D/d) shall not be less than 18:1	API SPEC 2C	(✓) YES ( ) NO
	MAIN POINT SHEAVES: — SHEAVE D / WIRE ROPE d = >18	API SPEC 2C	16 inch (D) 0.625 inch (d) 25 (Ratio D/d)
	AUX SHEAVES: — SHEAVE D / WIRE ROPE d = >18	API SPEC 2C	16 inch (D) 0.625 inch (d) 25 (Ratio D/d)
	IDLER SHEAVES: — SHEAVE D / WIRE ROPE d = > 18 (If applicable)	API SPEC 2C	16 inch (D) 0.625 inch (d) 25 (Ratio D/d)
	MAIN BLOCK SHEAVES: — SHEAVE D / WIRE ROPE d = > 16	API SPEC 2C	16 inch (D) 0.625 inch (d) 25 (Ratio D/d)
Load Block	**Load Block:** Check the load block for cleanliness, binding sheaves, damaged or worn sheaves, worn or distorted sheave pins, broken bolts, and worn cheek weights.	Industry Standard	(✓) YES ( ) NO
	Hook: Check the hook damage, excessive wear to the hook safety latch, hook swivel trunnions, thrust collar, securing, damage or missing lubrication fittings, proper lubrication, cracks and gouges, and if visibly bent or twisted or has been exposed to welding or arching.	Industry Standard	(✓) YES ( ) NO
	Hook: Tip has been bent more than 10 degree out of plane from the hook body	Industry Standard/API RP2D7	(✓) YES ( ) NO
	Pins for bronze bushing and straight roller bearing should have a running clearnace of .031 inch/ sheave of end play and should be adjusted accordingly	Industry Standard	(✓) YES ( ) NO
	Hook or shackle to swivel case clearance is set at .031 to .062 inch, Clearance exceeding .12 to .18 (ONLY CROSBY BRAND)	OEM Crosby	(✓) YES ( ) NO
	OEM STANDARD RECOMMEND that Crane block removal from service untill replaced and repair following below	OEM STANDARD	
	- Elongated center pin and hook trunnion holes exceeding 5% of Original diameter	OEM STANDARD	(✓) YES ( ) NO
	-Material loss due to wear exceeding 10% of original section	OEM STANDARD	(✓) YES ( ) NO
	-Sheave wire rop groove diameter smaller than 2.5%	OEM STANDARD	(✓) YES ( ) NO
	Loosened tie bolts nuts, center pin round nuts, check weight cap screws and hook nut cap screws. Tie bolt nuts to be torqued to 35-40 ft.Lbs and restaked, all other fasteners wrench tight	OEM STANDARD	(✓) YES ( ) NO
	Throat opening - any distortion causeing an increase in throat opening of 5% not ot exceed 1/4 in. (6 mm.)(or as recommended by the manufacturer)	ASME B30.10	(✓) YES ( ) NO
	Inspect rope track worn in sheave groove, sheave must be resurface or replace	API RP 2D	(✓) YES ( ) NO
	Ensure the load block is not using "Cast Iron" cheek weights they can not be used as per API	API SPEC 2C	(✓) YES ( ) NO
	Determine if all hooks are equipped with properly operating safety latches and check for proper functioning	API RP 2D	(✓) YES ( ) NO
	Lubricate sheave bearings and swivels	OEM Manual	(✓) YES ( ) NO
	Re-thighten nut firmly to point at which trunion will just rotate, the Re-tighten set-screw in nut and thread condition as in the picture below,	Industry Standard	(✓) YES ( ) NO
	Last NDE inspection record	Industry Standard	Last inspect date_____
	RECORD LOAD BLOCK INFORMATION : — Manufacturer:	OEM Manual	McKinnick
	Model:	OEM Manual	M2E5D16EH
	Serial Number:	OEM Manual	0509599
	Record load block measurements and details for future comparison with historical data ☑	Industry Standard	(✓) YES ( ) NO
	A - Block OD	Industry Standard	19½ mm/ inch
	B - Block length	Industry Standard	14 mm/ inch
	C - Center of Pin to hook Saddle	Industry Standard	25 mm/ inch
	D1 - Sheave Diameter	Industry Standard	16 mm/ inch
	E - Block Width	Industry Standard	31 mm/ inch
	F - Throat Opening	Industry Standard	6 mm/ inch
	G - Trunnion	Industry Standard	0.047 mm/ inch
Aux. Ball	**Inspect Auxiliary ball** for cleanliness, binding swivel, work pad-eye hole. Inspect the hook damage, excessive wear to the hook safety latch, Bent connector plates,Severe corrosion pitting, hook swivel trunnions, thrust collar, securing, damage or missing lubrication fittings,Loose, missing or damaged retaining nuts, cotter pins or swivel set screws ,Missing or illegible rating and warning tags, proper lubrication, cracks and gouges, and if visibly bent or twisted or has been exposed to welding or arching.	Industry Standard	(✓) YES ( ) NO

SYSTEM	TASK	Specification	Record/Reading
	Hook: Tip has been bent more than 10 degree out of plane from the hook body	Industry Standard/API RP2D7	(✓) YES ( ) NO
	OEM STANDARD recommend that Crane overhaul ball removal from service untill replaced and repair following below	**OEM STANDARD**	
	- Elongated ball pin holes, hook latch pin holes and swivel eye exceeding 5% of original diameter,	**OEM STANDARD**	(✓) YES ( ) NO
	-Swivel end play gap exceeding .08". Excessive end play indicates damaged internal set screw	**OEM STANDARD**	(✓) YES ( ) NO
	-Material loss due to wear exceeding 10% of original section	**OEM STANDARD**	(✓) YES ( ) NO
	Throat opening - any distortion causeing an increase in throat opening of 5% not ot exceed 1/4 in. (6 mm.)(or as recommended by the manufacturer)	**ASME B30.10**	(✓) YES ( ) NO
	All hooks that lift personnel are to have a positive locking safety latch ****locking Pin to be used while lifting personnel****	**API RP 2D**	(✓) YES ( ) NO
	*** Temperature Effected : When hooks are to be used at temperature above 400° F. (204°C) or below -40°F (-40°C), the hook manufacturer or a qualified person should be consulted *** Chemically Active Environment : The strength of hooks can be affected by chemically active environments, such as caustic or acid substances or fumes. The hook manufacturer or qualified person should be consulted before hooks are used in chemically active environment	**ASME B30.10**	
	Verify to ensure nut firmly at which trunion rotate. Identify to set-screw in nut/ swivel/ counter pin and thread condition.	Industry Standard	(✓) YES ( ) NO
	Last NDE inspection record	Industry Standard	Last inspect date_____
	RECORD AUX BALL INFORMATION : Manufacturer:	OEM Manual	Merrick
	Model:	OEM Manual	MB07T200E
	Serial Number:	OEM Manual	889089
	Record Auxiliary Ball measurements and details for future comparison with historical data: For Model MB07T200E ONLY	Industry Standard	
	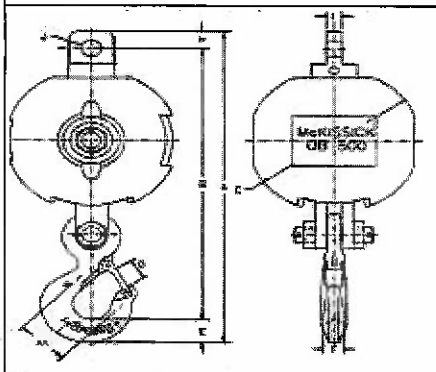 AA Dimensions 3.0 Inch	Industry Standard	3 mm/ Inch
	A Dimensions 24.89 Inch	Industry Standard	24.80 mm/ Inch
	B Dimensions 21.71 Inch	Industry Standard	21.7 mm/ Inch
	C Dimensions 12.50 Inch	Industry Standard	12.5 mm/ Inch
	D Dimensions 1.61 Inch	Industry Standard	1.6 mm/ Inch
	E Dimensions 1.81 Inch	Industry Standard	1.8 mm/ Inch
	F Dimensions 1.38 Inch	Industry Standard	1.35 mm/ Inch
	H Dimensions 1.38 Inch	Industry Standard	1.35 mm/ Inch
	I Dimensions 0.88 Inch	Industry Standard	0.90 mm/ Inch
	J Dimensions 1.31 Inch	Industry Standard	1.3 mm/ Inch
	Record Auxiliary Ball measurements and details for future comparison with historical data: For Model OB 7EE 200-4	Industry Standard	
	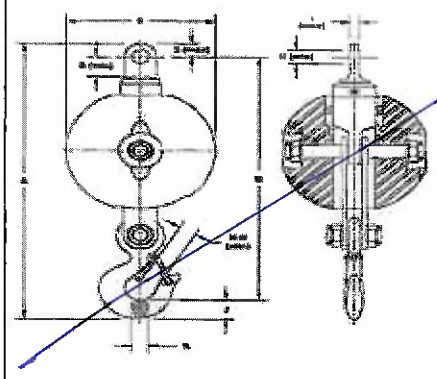 A Dimensions 27.25 Inch	Industry Standard	_____mm/ Inch
	B Dimensions 24.10 Inch	Industry Standard	_____mm/ Inch
	F Dimensions 12.00 Inch	Industry Standard	_____mm/ Inch
	H-H Dimensions 1.38 Inch	Industry Standard	_____mm/ Inch
	J Dimensions 1.81 Inch	Industry Standard	_____mm/ Inch
	K Dimensions 1.46 Inch	Industry Standard	_____mm/ Inch
	R Dimensions 1.55 Inch	Industry Standard	_____mm/ Inch
	S Dimensions 1.34 Inch	Industry Standard	_____mm/ Inch
	T Dimensions 1.03 Inch	Industry Standard	_____mm/ Inch
	U Dimensions 1.31 Inch	Industry Standard	_____mm/ Inch
Safety system	Check Condition anti - two block , hanging chain ,eye bolts , fix bolts , shackle for missing , corrosion , erosion , deformation	API RP 2D	(✓) YES ( ) NO
	Check anti - two block kick out plate for freely movement	Company Spec/Standard	(✓) YES ( ) NO
	Check anti-2-block device proper function of Main winch	Company Spec/Standard	(✓) Function ( ) False
	Check anti-2-block device proper function of Aux. winch	Company Spec/Standard	(✓) Function ( ) False
	Check relation of boom radius and boom angle (lowest, middle, highest) with refrence to load chart. Recharge fluid W-15 to load indicator, if required.	API RP 2D	(✓) YES ( ) NO
	Functional test of emergency lowering system (See procedure in Emergency Load Lowering Box). **Note:** Keep for 1 Yr PM to sustain crane mechanic competency. **Caution:** Function test must be performed on top deck with max 2-foot height.	Company Spec/Standard	(✓) Function ( ) False
	Visually check emergency load lowering kit. Ensure EMERGENCY LOWERING PROCEDURE and MATERIAL LIST are in the box. - Ensure ALL items shown on the list are in the box and in good condition - SECURE THE BOX WITH A TIE WRAP.	Company Spec/Standard	(✓) YES ( ) NO
Slew Mechanism	Visually check for damage and excessive wear on gear teeth	OEM Manual	(✓) YES ( ) NO
	Visually check slew gear box in the area of oil seal for any leaks	API RP 2D	(✓) YES ( ) NO
	RECORD SLEW GEAR BOX INFORMATION : Manufacturer:	OEM Manual	FUK
	Model:	OEM Manual	930A-D1C4-01
	Serial Number:	OEM Manual	—

SYSTEM	TASK		Specification	Record/Reading
	CHECK and RE-TORQUE swing drive gearbox mounting bolts at following brands: - ESKRIDGE, Model: 250 = 150 FT-LBS		API RP 2D	150 FT-LBS
	Check swing gearbox oil level/condition, top up if required	Meropa 220	OEM Manual	(✓) YES ( ) NO
	Monitor slew gearbox oil condition by visually examine for burnt smell, metal particles, and/or other contaminants, record and change if found.		OEM Manual	(✓) CHANGE OIL ( ) NOT CHANGE OIL
	Change slew gear box oil		OEM Manual	(✓) CHANGE OIL ( ) NOT CHANGE OIL
	Grease all pivot points of slew ring (bearing)		OEM Manual	(✓) YES ( ) NO
	Grease open gears (pinion)		OEM Manual	(✓) YES ( ) NO
	Rotate crane 360 degree and check smoothness of operation		OEM Manual	(✓) YES ( ) NO
	Check swing drive static parking brake for proper operation Caution: **DO NOT stop the swing of the crane with this static brake (parking brake)**		OEM Manual	(✓) YES ( ) NO
	Check swing drive dynamic parking brake for proper operation		OEM Manual	(✓) YES ( ) NO
	Check swing lock mechanism condition; corrosion ,dent , loos all part,worn and wear		OEM Manual	(✓) YES ( ) NO
	Check swing lock mechanism freely lock and unlock for function		OEM Manual	(✓) YES ( ) NO
	Check condition of slew ring bolts e.g. Bolt grade and washers. Caution: Use only hardened flat washers under head of bolt. Do not use lock washers, or regular flat washers.		Industry Standard	(✓) YES ( ) NO
	Monitor ball-ring grease sample. If found wear and tear particles, take sample and send to lab. **Wear assessment by grease sample analysis—wear may be monitored by periodic grease sample analysis as describe in this section. Grease samples should be collected every twelve months as a minimum and the results of the analysis recorded; this period should be shortened if obvious metal or contaminants are present.		API PR 2D	( ) SEND TO LAB (✓) NOT SEND TO LAB
	Verify crane condition and load test as separate procedure. **Table 1—Static/Onboard Test Load and Radius** Static/Onboard Rated Load at a Specific Radius lb (kg) — Test Loads in Excess of Static/Onboard Rated Load at a Specific Radius ≤ 40,000 (18,144) — 25 % > 40,000 ≤ 100,000 (>18,144 ≤ 45,356) — 10,000 lb (4536 kg) > 100,000 (45,356) — 10 %		API 2C	(✓) YES ( ) NO
	Verify crane condition and load test as separate procedure.		ปง.1	(✓) YES ( ) NO

Risk Level Definitions: The following 3 levels indicate the impact the noted deficiency poses to the operation or structural integrity of the equipment:

Level 1 = Incidental	Level #2 = Restricted Operation	Level #3 = Out of Service
Minor deficiency that is recommended to be promptly addressed, but poses no safety and/or environmental risk. The crane can still be operated at full duty.	Deficiency identified that has the potential to limit, de-rate or damage the crane, its surroundings and/or the environment. The duty and locked/ tagged out until the crane's duty and operation should be de-rated or service restricted.	The crane should be removed from duty and locked/ tagged out until the deficiency is rectified.

System:	Risk Level:	Component: / Location:		In Accordance with: / Date Originated:	
Description:	Front seal Engine oil leeping				
Recommended Action:	Monitor All PM				
Recommended urgency timeframe for corrective action:		Completed Date:		Completed By:	

System:	Risk Level:	Component: / Location:		In Accordance with: / Date Originated:	
Description:	Pressure gauge boom 5000 PSI				
Recommended Action:	Replace next plan				
Recommended urgency timeframe for corrective action:		Completed Date:		Completed By:	

System:	Risk Level:	Component: / Location:		In Accordance with: / Date Originated:	
Description:	Pressure gauge Accumulator at Hyd hand pump (ออกซิน)				
Recommended Action:	Replace next plan				
Recommended urgency timeframe for corrective action:		Completed Date:		Completed By:	

System:	Risk Level:	Component: / Location:		In Accordance with: / Date Originated:	
Description:	Starter drive gear bendix 75 %				
Recommended Action:	Monitor All PM				

File

SYSTEM	TASK		Specification		Record/Reading
Recommended urgency timeframe for corrective action:		Completed Date:		Completed By:	

System:	Risk Level:	Component:		In Accordance with:	
		Location:		Date Originated:	
Description:					
Recommended Action:					
Recommended urgency timeframe for corrective action:			Completed Date:		Completed By:

System:	Risk Level:	Component:		In Accordance with:	
		Location:		Date Originated:	
Description:					
Recommended Action:					
Recommended urgency timeframe for corrective action:			Completed Date:		Completed By:

Job Completed by

[redacted]

Job Completed Date: 24 July 2025

THE PEDESTAL CRANE CONDITION VERIFICATION

Date : 24 July 2023			
Crane Owner : CTEP/ COTL Field: Bendamas Platform/ Vessel: BENO			
Crane Owner 's representative : (Mech Supv./ M'Dent) [redacted]			
Qualified inspector : (Qualified Crane Mechanic)			
Inspector 's company / agency : (Third Party or Outsource to witness if applicable)			
Manufacture Nautilus Fabrication by Oil State Year of Fabrication Country USA Model / Serial 18081-80(MS) / 23704 Standard API Edition SEX TH 2004			Remark
Safe Working Load (SWL) —> OEM	14.52 Metric Tonnes		
Safe Working Load (SWL) —> Existing via MOC, if applicable	- Metric Tonnes		
Boom length, Main	80 Ft		
Boom length, Auxiliary if applicable	- Ft		
Part of line main hoist	4 Part line		
Part of line auxiliary hoist	1 Part line		
Safe Working Load at longest boom radius	80 ft	3.30 Metric Tonnes/ ~~Lbs~~	
Safe Working Load at shortest boom radius	13 ft	14.52 Metric Tonnes/ ~~Lbs~~	
The document of crane specification for Testing , Maintenance and Inspection are provided by:	OEM	MOC / Crane Engineer	
Has the crane ever been modified by MOC ? (To verify if this crane is modified with MOC --> Allow to test the crane. If this crane is modifed without MOC --> Not allow to test the crane)	YES	NO	(Employers are not allowed to modify or adjust any part of cranes or dericks or consent to other persons to do these things, that might reduce the safety of the employees who work with the cranes or derricks).
Does the rotating part have proper guard in place?	YES	NO	(Need mitigation plan)
Is the ladder and hand rail in place?	YES	NO	(Need mitigation plan)
Is the maintenance platform in place?	YES	NO	(Need mitigation plan)
Is the SWL tag labelled on crane pedestal, main block or aux ball?	YES	NO	(Need mitigation plan)
Verify if the crane major component damaged or not	YES (Need to repair or mitigate unsafe condition with MOC before testing)	NO	(Employers shall not allow employees work with damaged/ unsafe cranes or derricks)
Inspect boom end connections, for bends, dents, corroded areas, cracked welds, and signs of mechanical damage, wear, etc. **any deviation should be reported** Level 1 = Incidental : Minor deficiency that is recommended to be promptly addressed, but poses no safety and/or environmental risk. The crane can still be operated at full duty. --> Allow to test Level #2 = Restricted Operation: Deficiency identified that has the potential to limit, de-rate or damage the crane, its surroundings and/or the environment. The duty and locked/ tagged out until the crane's duty and operation should be de-rated or service restricted. --> To be derated Level #3 = Out of Service;The crane should be removed from duty and locked/ tagged out until the deficiency is rectified. --> Not Use	YES (To be verified)	NO	
Function Load Testing			
1. Verify Crane SWL (Existing)	3.0 Metric Tonnes		
2. Verify routine maximum actual load.	2.4 Metric Tonnes		
3. Select the specimen load to be more than actual routine load 1.25 times but not more than SWL. Example # 1 : Crane 's SWL is 18 Metric Tonnes. The routine maximum actual load is 2.4 Metric Tonnes. Therefore, the load testing shall be 2.4 x 1.25 = 3 Metric Tonnes. Example # 2 : Crane 's SWL is 18 Metric Tonnes. The routine maximum actual load is 16 Metric Tonnes. By calculation, the load testing is 16 x 1.25 = 20 Metric Tonnes more than SWL (18 MTon). **Therefore, the load testing shall be 18 Metric Tonnes equal to SWL.**	3.0 Metric Tonnes		
4. Use Auxiliary Winch if specimen load less than or equal 3 Metric Tonne	YES	NO	
5.Use Main Winch if specimen load more than 3 Metric Tonne	YES	NO	
6. The record of load testing : Fill in "Function Test Record" sheet attached.			

RECORDED FUNCTION TEST PROCEDURE

1. CHECK AND RECORD READING RADIUS AND BOOM INDICATIOR AT FOUR (4) VALUES INCLUDING MAXIMUM AND MINIMUM.

(ALL REDIUS MEASUREMENT ARE TO BE TEKEN FROM THE CENTERLINE OF CRANE ROTATION)

ACTUAL	INDICATED RADIUS (FT)
A) 15' (MINIMUM)	15
B) 20'	20
C) 25'	25
D) 30' (INTERMIDIATE)	30
E) 40'	40
F) 50' (INTERMIDIATE)	50
G) 60'	60
H) 75' (MAXIMUM)	75

2. CHECK AND RECORD READING ON BOOM ANGLE / DEGREES.

SPECIFICATION	INDICATED BOOM ANGLE (DEGREES)
1). MAXIMUM. ..... 81 ..... DEGREES	81
2). INTERMEDIATE. ..... 60 ..... DEGREES	60
3). INTERMEDIATE. ..... 40 ..... DEGREES	40
4). MINIMUM. ..... 0 ..... DEGREES	0

3. READING ON LOAD INDICATOR WITHOUT SLINGS OR LOAD / LBS. (LOAD BLOCK + WIRE ROPE)

ACTUAL	INDICATOR READ FREE LOAD, (LBS)
1). MAXIMUM RADIUS 750 LBS.	750
2). MINIMUM RADIUS 900 LBS,	900

4. CHECK AND RECORD ENGINE HIGH IDLE SPEED / RPM.

SPECIFICATION	INDICATED OF FUNCTIONAL (RPM)
1). IDLE SPEED 850 RPM	850
2). LOW SPEED – RPM	–
3). HIGH SPEED 2200 RPM	2200

5. FUNTIONALLY TEST THE FOLLOWING.

ACTUAL	INDICATED OF FUNCTIONAL (TESTED)
A) MAIN HOIST ANTI -TWO BLOCK.	Function
B) AUXILIALY HOIST ANTI -TWO BLOCK.	Function
C) HIGH BOOM ANGLE KICK OUT.	N/A
D) LOW BOOM ANGLE KICK OUT.	N/A
E) PRIME MOVER SHUTDOWN.	Function
F) EMERGENCY SHUTDOWN.	Function
G) ROTATE CRANE 360 LEFT.	Smooth
H) ROTATE CRANE 360 RIGHT.	Smooth

6. RECORD HYDRAULIC RELIEF VALVE PRESSURE SETTING ON FOLLOWING HYDRAULIC FUNCTION:

SPECIFICATION	INDICATED PRESSURE (PSI)
A) MAIN HOIST ..... 3085 ..... PSI.	3085
B) AUXILIALY HOIST ..... 2800 ..... PSI.	2800
C) BOOM HOIST ..... 3000 ..... PSI.	3000

TEST CONDUCTED BY: [redacted] POSITION : Cr- Mech

CRANE OPERATOR : POSITION : Cr - Mech

COMMENTS : DATE : 24 July 2025

.....

.....

.....

.....

▪ DETERMINING CRANE CAPACITY WITH LOAD CHART

1. Loads with weight marked:

A. Add weight of hook block to load weight.

B. Add weight of rigging to load weight (unless pre-rigged) (if pre-rigged, weight of slings is included in load weight)

C. Verify boom angle/radius needed to make lift - both hoisting and lowering if different. Indicator is approximate - if possible, measure radius for capacity lifts.

D. Find capacity of crane in proper column on load chart.

- Do not interpolate if angle, radius or load weight falls between chart values, go to safer case.
- Use static rating (at static radius to be used) for lifts off or onto a fixed platform.
- Use dynamic ratings (at dynamic radius to be used) for lifts off or onto a boat.

2. Do **Not exceed** the lowest rated capacity for the lift. Example: To move a load from the platform to the boat, there will be a rated static capacity

(capacity to lift the load from the platform at the radius used), and a rated dynamic capacity (capacity to get down on the boat at a possibly different radius).

Do Not exceed the least of the two capacities on this lift.

3. Do **Not boom down** to a lower angle (longer radius) than shown on the load chart for the weight while moving the load, Keep this minimum angle in mind at all times.

▪ LIFTING UNKNOWN LOADS TO DETERMINE WEIGHT

1. Verify angle or radius to be used.
2. Find capacity of crane on chart.
3. Subtract weight of hook block or ball from capacity - check/adjust zero setting on weight indicator.
4. Hoist load carefully, be aware of capacity limit on weight indicator (if available).
5. If capacity is reached on load indicator before load rises, lift cannot be made at the radius used.
6. Do Not show the weight of slings as part of the load unless pre-rigged (slings stay with load).

CRANE Mfg. : Nautilus
MODEL: 180B1-80 (MS)
SERIAL NUMBER :

LOCATION: MAWG

DATA BASE - PM JOB TASK CARD: WO. 1257165

Crew Size:
Estimated Hours:

SYSTEM	TASK		Specification	Record/Reading
Safety	Perform Job Safety Analysis (JSA)		Company Spec/Standard	(✓) YES ( ) NO
	Obtain "COMPANY" PERMIT TO WORK		Company Spec/Standard	(✓) YES ( ) NO
	Perform Tool Box Talk		Company Spec/Standard	(✓) YES ( ) NO
	BEFORE/AFTER JOB EXECUTION: Ensure to comply with isolation procedure (LOCK OUT/TAG OUT, WARNING SIGNS and BARRIERS).		Company Spec/Standard	(✓) YES ( ) NO
Required Tools	Insure proper tools are available at the job site		Company Spec/Standard	(✓) YES ( ) NO
	Tool bag		Company Spec/Standard	(✓) YES ( ) NO
	Tool box		Company Spec/Standard	(✓) YES ( ) NO
	Tool Container		Company Spec/Standard	(✓) YES ( ) NO
	MPI equipment and operator		Company Spec/Standard	(✓) YES ( ) NO
	Check safety harness Software and Hardware should be good condition before use		Company Spec/Standard	(✓) YES ( ) NO
	Check Rescue Equipment ready to use onsite		Company Spec/Standard	(✓) YES ( ) NO
	Portable Scaffolding and Crew if require		Company Spec/Standard	(✓) YES ( ) NO
Lubricants	Insure proper lubricants and consumables are available at the job site.		Company Spec/Standard	(✓) YES ( ) NO
	Hydraulic System - Hydraulic Oil	Rando HD-68	OEM Manual	(✓) YES ( ) NO
	Slew Gearbox - Gear Oil	Meropa 220	OEM Manual	(✓) YES ( ) NO
	Auxiliary Hoist - Gear Oil	Meropa 220	OEM Manual	(✓) YES ( ) NO
	Main Hoist - Gear Oil	Meropa 220	OEM Manual	(✓) YES ( ) NO
	Grease Points - Lithium Based **IT MUST NOT INCLUDE MOLYBDENUM DISULPHIDE**	MULTIFAK EP#2	OEM Manual	(✓) YES ( ) NO
	Open Gear Teeth - Open Gear Lube highly water resistant and of an adhesive nature.	OMEGA 73	OEM Manual	(✓) YES ( ) NO
	Pneumatic Lubricator	SAE Grade 10	OEM Manual	(✓) YES ( ) NO
	Wire rope Lubricant Company preferred grade	Birfube 70	OEM Manual	(✓) YES ( ) NO
	Engine Oil - SAE Grade 15W-40 (Delo Gold)	15W-40	OEM Manual	(✓) YES ( ) NO
	Safe Load Indicator fluid	W-15	OEM Manual	(✓) YES ( ) NO
	Engine Radiator - Should have radiator preservatives additives	Cat® SCA	OEM Manual	(✓) YES ( ) NO
Consumables	Spray Cold Galvanize		Company Spec/Standard	(✓) YES ( ) NO
	Denso Tape		Company Spec/Standard	(✓) YES ( ) NO
	WD-40		Company Spec/Standard	(✓) YES ( ) NO
History Review	Before starting work, tasks preparation at least 1 day prior to starting work: 1. Review history PM/ CM from Roving Team, 2. Review last PM/ CM/ PMI from Crane Mech, 3. List out all punch list and prepare parts. 4. Review last Certificate task performed		API RP 2D	(✓) YES ( ) NO
	Require to update part history from Crane Mech on following main compenents to ensure the right parts are prepared: - Aux/ Main/ Boom Cylinder, Engine, Swing Gearbox, etc. Reference: Crane OEM information of each part need to be recorded - Manufacturer & Contact info - Model & serial number - Installation date		Company Spec/Standard	(✓) YES ( ) NO
	Review history data from Certificates and incorporate into current PM: - Pull Test Certificates (ongoing update, 4 yr. history). - Load Test Certificates (ongoing update, 4 yr. history). - Wire Rope Certifications (running rope and standing rope) (life of rope). - Hoist Certifications for hoist classified as "personnel handling" hoist.		API RP 2D	(✓) YES ( ) NO
	Review Last Preventative Maintenance Records (Inspection Reports) - Pre-use (Pre-Post Inspection) - 6 Monthly (API RP 2D Not Defined, Company Standard) - 1 Yearly (API RP 2D Defined Annual Inspection)		API RP 2D	(✓) YES ( ) NO
Lifting Gear Preparation	Visually Inspect (Sling, sling hooks and shackles) include Websling / Chain		Company Spec/Standard	(✓) YES ( ) NO
	Check color code / Tag & date inspection		Company Spec/Standard	(✓) YES ( ) NO
General	Determine if access route to-from crane is clean, safe, unobstructed and adequately protected against falls, tripping and slipping		Company Spec/Standard	(✓) YES ( ) NO
	Check drain lines and drip pans for deterioration		API RP 2D	(✓) YES ( ) NO
	Remove any sediment collected in the bottom of drip pans		Industry Standard	(✓) YES ( ) NO
	Check for general crane and components for loss of protective coating and corrosion		Industry Standard	(✓) YES ( ) NO
	Check for missing or loose ,corrosion, deformation pins, pin keepers, bolts, nuts, fasteners of all laders, cages and working platform		API RP 2D	(✓) YES ( ) NO
	Apply grease to exposed grease parts (control valve spools, ball-ring gear, parking brake valve, etc.)		OEM Manual	(✓) YES ( ) NO
Prime Mover	Engine Caterpillar		OEM Manual	(✓) YES ( ) NO
	CATERPILLAR MODEL ~~3216~~ 3126	S/N.:	OEM Manual	9ZR03502
		AR.No.:	OEM Manual	132-4583
	Change engine lube oil & oil filter and check the condition of old oil. As found ; Good		OEM Manual	(✓) YES ( ) NO
	Check diesel tank level, top up if required.		OEM Manual	(✓) YES ( ) NO
	Check / Clean crankcase breather cap. Change if required		OEM Manual	(✓) YES ( ) NO
	Check / Clean air cleaner filter, Replace if require. (Note : Include inspect air cleaner housing)		OEM Manual	(✓) YES ( ) NO
	Check condition and inspect of the radiator and cap.		OEM Manual	(✓) YES ( ) NO
	Check for any signs of leaks on or around the engine ie; Crankshaft seal for front & rear seal , Engine oil cooler. As found; Good		OEM Manual	(✓) YES ( ) NO
	Check condition exhaust system for leaks, corrosion, insulation and general. As found ; Good		OEM Manual	(✓) YES ( ) NO
	Check condition of all engie hoses and tube. (Fuel supply,Cooling system and Lube oil system. As found; Good		OEM Manual	(✓) YES ( ) NO
	Drain water and sediment form diesel tank. As found ; Good		OEM Manual	(✓) YES ( ) NO
	Check / Clean Diesel tank level sightglass and diesel tag.		OEM Manual	(✓) YES ( ) NO
	Apply grease of fan bearing/shaft.		OEM Manual	(✓) YES ( ) NO
	Check and inspect the vibration damper and pulley. As found ; Good		OEM Manual	(✓) YES ( ) NO
	Change water coolant and check condition base of water coolant and record PH.		OEM Manual	(✓) YES ( ) NO
	COOLANT PARAMETERS (PH):	6 or higher	OEM Manual	PH = 7
	HOUR METER PARAMETERS:	LAST READING 780 HRS	OEM Manual	780 HRS
	Check and retigthen the bolts of all engine base. / Inspection mouting rubber. As found ; Good		OEM Manual	(✓) YES ( ) NO
	Inspect the engine fan blades that there is a break is it severely distorted or rusted. As found ; Good		OEM Manual	(✓) YES ( ) NO

[redacted] / 10 Aug 24

SYSTEM	TASK			Specification	Record/Reading
	Change and adjust the tension engine belts. Remark; To check belt Tension, after has engine run more than 30 minules apply 400 N (90 lbs) of force midway between the pulleys. Correctly adjusted belts with deflect 13 to 19 mm (1/2 to 3/4 inch).			OEM Manual	(✓) YES ( ) NO
	Check engine HYD starter drive gear bendix and fly wheel gear teeth condition and record. **Replace if required"			OEM Manual	(✓) YES ( ) NO Bendix Gear : 90 % Fly wheel Gear teeth : 90 %
	Check and inspect condition the Bendix of hydraulic Starter motor.			OEM Manual	(✓) YES ( ) NO
	Lubricate and check engine throttle system.			OEM Manual	(✓) YES ( ) NO
	Determine if the tachometer operates properly: Record Value of Idle & Max Speed (RPMs) Note: Too low Idle (RPMS) will cause excessive worn at winch brake			OEM Manual	
	ENGINE RPM SPECIFIC	IDLE SPEED	850-950 RPM	OEM Manual	850 RPM
		MAX SPEED	2200 RPM	OEM Manual	2200 RPM
	Confirm engine oil pressure as per Parameters below and Record Value:			OEM Manual	
	ENGINE OIL PRESSURE SPECIFIC	Minimum	Not lower then 30 PSI	OEM Manual	45 PSI
		Maximum	70 PSI	OEM Manual	70 PSI
	Confirm engine fuel pressure Parameters are correct and Record Value:			OEM Manual	
	ENGINE FUEL PRESSURE SPECIFIC** ***Note;Fuel pressure at high idle is lower than 105 kPa (15 psi)RAMETERS*	Normal	Green Range/ 15 PSI	OEM Manual	(✓) YES ( ) NO
	Confirm engine temperature Parameters and Record Value:			OEM Manual	
	ENGINE WATER TEMP SPECIFIC	NORMAL	120 - 180 degrees F	OEM Manual	170 F
	Test engine SAFETY DEVICE- ensure engine kill cable shuts off FUEL supply			API RP 2D	(✓) Function ( ) False
	Test engine SAFETY DEVICE- ensure EMERGENCY KILL CABLE - shuts off AIR supply			API RP 2D	(✓) Function ( ) False
	Test engine SAFETY DEVICE- ensure ENGINE low lube oil - releases OIL PRESSURE to ctivate Alarm Air System ****Note*** Engine oil pressure low alarm at 20 PSI*			Company Spec/Standard	(✓) Function ( ) False
	Test engine SAFETY DEVICE- ensure HIGH TEMP - releases OIL PRESSURE to activate Alarm Air System			Company Spec/Standard	(✓) Function ( ) False
	Change water separator filter.			OEM Manual	(✓) YES ( ) NO
	Check the general conditionand functioning of turbocharger. Note;			OEM Manual	( ) Leak (✓) Not Leak
	Change fuel filter and inspect the primary hand pump.			OEM Manual	(✓) YES ( ) NO
	Check general condition the Governor and control linkage. (Inspect the throtle linkage)			OEM Manual	(✓) YES ( ) NO
	Check or adjust the engine valve lash. (Intake vale = 0.015", Exhaust valve = 0.025")			OEM Manual	(✓) YES ( ) NO
	Check or adjust the fuel timing control linkage of Unit Injector (CAT 3126) Reference: Fuel timing injection length, use the following references to obtain information: - Engine Information Plate (located at valve cover) Specific data .....mm/inch. Engine S/N..... - TMI (Technical Marketing Information - located at Manual Book) - Fuel setting and related Information Fiche			Company Spec/Standard	65.05 mm/ inch (After Adjustment)
	Check condition wear of pump drive spline and record ***Note; Remaining 70% of Original Spline Surface must be replace.*			Company Spec/Standard	90 % Remaining
	Check condition wear of adaptor Coulping spline shaft and record ***Note; Remaining 70% of Original adaptor Coulping spline shaft Surface must be replace.*			Company Spec/Standard	90 % Remaining
	Check condition wear of Coulping spline and record. Re-tigthen of all lock bolts. ***Note; Remaining 70% of Original adaptor Coulping spline shaft Surface must be replace.*			Company Spec/Standard	90 % Remaining
Hydraulic Start System (Apply for C2-Remote P/F Only)	Check pressure system at the pressure gauge which should reach 3,000 PSI as standard when the system is FULLY charged. Record Value. (As the system cools down, the pressure should drop slightly and finally stabilised.)			OEM Manual	(✓) YES ( ) NO
	Visually inspect all hydraulic connections and hoses for leaks and retighten if necessary. (Caution: This should NOT be done if the system is under pressure.) 1. Slowly release system pressure by loosening the bleed screw on top of the hand pump. 2. Ensure no pressure remains, retighten the suspected leak fitting or replace the damaged hose or component. 3. Retighten the bleed screw on the hand pump. 4. Pump the system up to 2200 - 2600 PSI 5. Inspect that the leak was eliminated.			OEM Manual	(✓) YES ( ) NO
	Function check Accumulator Pre-charge. (Caution: This should NOT be done if the system is under pressure.) 1. Shut the engine off, release system pressure via the bleed screw on top of the hand pump 2. Retighten bleed screw and actuate the hand pump. The pressure will rapidly increase and then stabilised. This pressure is related to accumulator gas pre-charge pressure. 4. If the pressure rapidly increase to 3000 PSI, it indicates that the accumulator has lost its gas charge. 5. Troubleshoot as necessary			OEM Manual	(✓) YES ( ) NO
	Check function rechaging system by function boom down while the engine running. 1. The crane engine is running at 1,000-1500 RPM. 2. Slowly control lever boom function down for charging pressure to accumulator. 3. This pressure should read on prssure gauge between 2200 - 2600 PSI depending on the recharge ratio 80% std. (90% optional). Record Pressure Value.			OEM Manual	2500 PSI
	Check Nitrogen pressure in Accumulator ***Note**spec @ 1,500 psi as follow schematic and if found pressure loss below 1400 PSI then prepare recharge nitrogen in system			OEM Manual	1500 PSI
Pneumatic System	Check for noisy compressor operation, which could indicate a worn drive gear coupling, a loose pulley or excessive internal wear			OEM Manual	(✓) YES ( ) NO
	Check Air Compressor external oil supply and return lines, if applicable, for kinks, bends, or restrictionsto flow			OEM Manual	(✓) YES ( ) NO
	Inspect the Air compressor discharge port, inlet cavity and discharge line for evidence of restrictions and carboning. (If excessive buildup is noted)			OEM Manual	(✓) YES ( ) NO
	Check all hose connections are sound and all mounting and pivoting connections are secure.			OEM Manual	(✓) YES ( ) NO
	Check condition / Clean and lubricate unloading valve			OEM Manual	(✓) YES ( ) NO
	Check proper air pressure is available for the system. Record Value.			OEM Manual	
	AIR SYSTEM PARAMETERS:		MAX 60 PSI	OEM Manual	60 PSI
	Visually inspection condition of air receiver for signs of corrosion or loose of structural integrity.			Industry Standard	(✓) YES ( ) NO
	Check the hose, piping and tubing for mechanical damage, corrosion, splits, blisters, cracking or excessive abrasion on the outer surface			Industry Standard	(✓) YES ( ) NO
	Drain off air filter and reciever to remove condensed water. If water is present, drain until water is removed.			Industry Standard	(✓) YES ( ) NO
	Check proper operation of pop off valve, by manually functioning valve.			Industry Standard	(✓) YES ( ) NO
	Check proper operation of manual latch valve, by manually functioning latch.			Industry Standard	(✓) YES ( ) NO
	Check proper operation of small engine alarm horn.			Industry Standard	(✓) YES ( ) NO
Hoist / Brakes	Visually check a hoist exhibits erratic operation and/or unusual noise, the hoist must be taken out of service until it is inspected and serviced by a qualified technician. Continued operation of a hoist with a defect in a critical component may lead to loss of load control, property damage, serious injury or death.			OEM Manual	(✓) YES ( ) NO
	Visual exteriors of hoist, frames, drums and flanges for damage, leaks, cracks and wear and repair/replace as required to maintain the structural integrity of the hoist.			OEM Manual	(✓) YES ( ) NO
	Check all hoist mounting pins, bolts or other fasteners and replace or tighten as necessary.			OEM Manual	(✓) YES ( ) NO

[redacted] / 10 Aug 25.

SYSTEM	TASK			Specification	Record/Reading
	Lubricant level must be maintained between the minimum and maximum levels; midway up sight glass or at bottom of level plug port as equipped and check/clean plug vent. Use only the recommended type of lubricant.			OEM Manual	(✓) YES ( ) NO
	Inspect Brake Valve Opening Pressure test V/V 1-1/4" PD Series : no lower than 550 PSI V/V 1-1/2" CH Series : no lower than 575 PSI	Main		Braden Bulletin 527-Dec,1996	600 PSI
		Aux			600 PSI
	Inspect Brake cylinder opening pressure test. CH/PD Series : 400-450 PSI.	Main		Industry Standard	400 PSI
		Aux			400 PSI
	Measure differancian of static and dynamic brake. CH/PD Series : 150-250 PSI.	Main		Industry Standard	200 PSI
		Aux			200 PSI
	Check for external oil leaks and repair as necessary. This is extremely important due to the accelerated wear that will result from insufficient lubricating oil in the hoist.			OEM Manual	(✓) YES ( ) NO
	RECORD BOOM CYLINDER INFORMATION :	Boom cylinder Diameter:		OEM Manual	DIA: 12 Inch
		CY Number:		OEM Manual	L= 6169-B7 R= 6169-B1
		Serial Number:		OEM Manual	L= 5236 R= 5280
	RECORD MAIN HOIST INFORMATION :	Manufacturer:		OEM Manual	Braden
		Model:		OEM Manual	CH175A-93000-08-1
		Serial Number:		OEM Manual	0400525
	Check MAIN HOIST for proper operation and good condition			API RP 2D	(✓) YES ( ) NO
	Brake test & record pressure of MAIN HOIST.			OEM Manual	(✓) YES ( ) NO As found Good
	Change main hoist gear oil and inspect for small particles in the old oil. ** Refer to Onsite Gear Oil Sample Procedure ** ** Replace and send oil sample to SKL if abnormal ** ** Take photo of Oil Sampling for Reference**			OEM Manual	(✓) YES ( ) NO As found Good
	RECORD AUXILIARY HOIST INFORMATION :	Manufacturer:		OEM Manual	Braden
		Model:		OEM Manual	PD12C-29064-04-1
		Serial Number:		OEM Manual	1254335
	Check AUXILIARY HOIST for proper operation and good condition			API RP 2D	(✓) YES ( ) NO
	Brake test & record pressure of AUXILIARY HOIST			API RP 2D	(✓) YES ( ) NO
	Change Aux. hoist gear oil and inspect for small particles in the old oil. ** Refer to Onsite Gear Oil Sample Procedure ** ** Replace and send oil sample to SKL if abnormal ** ** Take photo of Oil Sampling for Reference** Please record if any abnormal condition. Note.....			OEM Manual	( ) SEND SKL LAB (✓) NOT SEND SKL LAB
	Check pressre relief Valve: Determine hoistes' relief valve pressure gauge is working and giving accurate measurement by notice whether pressure gauge is vibrating or not. If not, set relief valve pressure in accordance with the schematic and parameters below. Record all readings.			OEM Manual	(✓) YES ( ) NO
	BOOM RELIEF VALVE TEST	Relief Specific:	3,000 PSI	OEM Manual	3000 PSI
	MAIN HOIST RELIEF VALVE TEST	Relief Specific:	3,000 PSI	OEM Manual	3085 PSI
	AUX HOIST RELIEF VALVE TEST	Relief Specific:	2,700 PSI	OEM Manual	2800 PSI
	SWING RELIEF VALVE TEST	Relief Specific:	1,500 PSI	OEM Manual	1300 PSI
	Measure Pressure of hoist motor case drains and Record Value Reference Bulletin: BRADEN Inspection, Testing, Preventive Maintenance and Special Operating Instructions For Planetary Hoists PB-308 latest edition for further details.			OEM Manual	
	MAIN HOIST CASE DRAIN for Gear Motor (Down Mode).	PRESSURE	< 100 psi	Company Spec/Standard	10 PSI
	AUX. HOIST CASE DRAIN for Gear Motor (Down Mode).	PRESSURE	< 100 psi	Company Spec/Standard	15 PSI
Hydraulic System	Check hydraulic tank oil level. Oil should be visible in the sight glass. Top up as required (3/4 Tank Minimum)			OEM Manual	(✓) YES ( ) NO
	Check hydraulic oil condition. (Check if running hours are more than 100 hours from last oil change or during Annual inspection) ** Refer to Onsite Hydraulic Oil Sample Procedure ** ** Replace and send oil sample to SKL if abnormal ** ** Take photo of Oil Sampling for Reference**		Rando HD-68	Company Spec/Standard	( ) SEND SKL LAB (✓) NOT SEND SKL LAB
Hydraulic System	Drain off 1 liter of oil to remove condensed water. If water is present, drain until water is removed and top up with clean oil			Industry Standard	(✓) YES ( ) NO
	Check for any hydraulic leaks			Industry Standard	(✓) YES ( ) NO
	Check the hydraulic hose, piping and tubing for mechanical damage, corrosion, splits, blisters, cracking or excessive abrasion on the outer surface			API RP 2D	(✓) YES ( ) NO
	Check that all hydraulic hose connections are sound and that all mounting and pivoting connections are secure.			Industry Standard	(✓) YES ( ) NO
	Lubricate hydraulic swivel in pedestal and insure tie down restrains are in place and preventing the swivel from rotating with the crane structure.			OEM Manual	(✓) YES ( ) NO
	Ensure the filler breather on tank is not covered or clogged			Industry Standard	(✓) YES ( ) NO
	Visually inspect for missing or loose pins, pin keepers, bolts, nuts, fasteners on all pumps, motors and valves			API RP 2D	(✓) YES ( ) NO
	* Re-tighten the stud bolt of hydraulic main pump and marking the nut for checking to prevent loosening. Note : Torqe spec model P76, P75, PGP/PGM350 ,PGP/PGM330 = 200 ft-lbs. , for model PGP/PGM315 = 140 ft-lbs. and PGP/PGM365 = 450 ft-lbs.			The Commercial Intertech manual	(✓) YES ( ) NO
	Check the filter bypass indicator, while engine is running.			OEM Manual	(✓) YES ( ) NO
	With engine running (after all other items pass inspection), check the system for leaks around fittings, hoses, valves and reservoirs			Industry Standard	(✓) YES ( ) NO
	With engine running, check the source of any unusual noise or vibration that may cause or indicate equipment damage or wear			Industry Standard	(✓) YES ( ) NO
	Ensure all hoses are properly rated for the system, see "Parameters" for each system for details.			Industry Standard	(✓) YES ( ) NO
	Record hydraulic oil operating temperture. Note: Hydraulic fluid overheating temperature is over 180 F degrees or 82 C, degrees (reservoir temperature)			Industry Standard	120 Degree F
	Determine if hydraulic return pressure gauge is working and giving accurate measurements. Record readings				
	RECORD HYDRAULIC RETURN PRESSURE PARAMETERS:		60 PSI "maximum"	OEM Manual	30 PSI
	Check and inspect the hydraulic return filters and seals.			OEM Manual	(✓) YES ( ) NO
	Function Testing and record pressures with engine at :		2,200 RPM	API RP 2D	
	BOOM FUNCTION TEST (Need Crane Mech to verify each platform)			OEM Manual	
	Boom Angle : 60 Degree (Recommend or as applicable)	UP	Cracking pressure	RECORD	OEM Manual 50 PSI
			Full Speed Pressure	RECORD	OEM Manual 550 PSI
			Cracking pressure	RECORD	OEM Manual 600 PSI

[redacted] / 10 Aug 25.

SYSTEM	TASK				Specification	Record/Reading
		DOWN	Full Speed Pressure	RECORD	OEM Manual	1300 PSI
	MAIN HOIST FUNCTION TEST (Need Crane Mech to verify each platform)				OEM Manual	
	Boom Angle : 60 Degree (Recommend or as applicable)	UP	Cracking pressure	RECORD	OEM Manual	50 PSI
			Full Speed Pressure	RECORD	OEM Manual	700 PSI
		DOWN	Cracking pressure	RECORD	OEM Manual	800 PSI
			Full Speed Pressure	RECORD	OEM Manual	1500 PSI
	AUX HOIST FUNCTION TEST (Need Crane Mech to verify each platform)				OEM Manual	
	Boom Angle : 60 Degree (Recommend or as applicable)	UP	Cracking pressure	RECORD	OEM Manual	50 PSI
			Full Speed Pressure	RECORD	OEM Manual	700 PSI
		DOWN	Cracking pressure	RECORD	OEM Manual	700 PSI
			Full Speed Pressure	RECORD	OEM Manual	1500 PSI
	SWING FUNCTION TEST (Need Crane Mech to verify each platform)				OEM Manual	
	Boom Angle : 60 Degree (Recommend or as applicable)	LEFT	Cracking pressure	RECORD	OEM Manual	150 PSI
			Full Speed Pressure	RECORD	OEM Manual	800 PSI
		RIGHT	Cracking pressure	RECORD	OEM Manual	150 PSI
			Full Speed Pressure	RECORD	OEM Manual	800 PSI
Electrical system, Crane Boom Lighting and red obstruction light	Check the electrical junction boxes, wires and connections for deterioration, desiccant bags, (replace as required)				Industry Standard	(✓) YES ( ) NO
	Check the condition of the grounding and lighting protection system.				Company Spec/Standard	(✓) YES ( ) NO
	Visually inspect boom floodlight and light guards for loose, missing, corroded				Company Spec/Standard	(✓) YES ( ) NO
	Check condition pipe support , U-bolt ,nuts of boom floodlight and Electric slipring for loose , missing , corroded				Company Spec/Standard	(✓) YES ( ) NO
	Check Electric slipring/swivel for 360" continuous rotation				OEM Munnal	(✓) YES ( ) NO
	Check Water ingress, condensation in electric slipring, red obstruction light and boom floodlight				OEM Munnal	(✓) YES ( ) NO
	Check feely movement and lubricate of boom floodlight				OEM Munnal	(✓) YES ( ) NO
	With generator in operation, intergize all lights to unsure proper function.				API RP 2D	(✓) YES ( ) NO
	Check condition of crane boom lighting and safety net is secured with strong point. * **Safety net should be replace 24 months after installation (2 year)***			Last installation date _____	Company Spec/Standard	(✓) YES ( ) NO
	Check function of crane sound signal				Company Spec/Standard	(✓) YES ( ) NO ( ) N/A
	Check function of crane boom lighting at boom upper section				Company Spec/Standard	(✓) YES ( ) NO ( ) N/A
	Check function of crane boom lighting at boom lower section				Company Spec/Standard	(✓) YES ( ) NO ( ) N/A
	Check function of crane boom lighting at winch skid				Company Spec/Standard	(✓) YES ( ) NO ( ) N/A
	Check function of crane boom lighting at crane cabin				Company Spec/Standard	(✓) YES ( ) NO ( ) N/A
	Check function becon light at boom tip				Company Spec/Standard	(✓) YES ( ) NO ( ) N/A
	Inspection wire rope guide & Roller assembly				Company Spec/Standard	(✓) YES ( ) NO
	Visually inspect red obstruction light pipe support, u-bolts, nuts connection to hand rail for loose, missing, corroded				Company Spec/Standard	(✓) YES ( ) NO
	Visually inspect safety sling attached to the red obsruction light and its base for loose, missing, corroded				Company Spec/Standard	(✓) YES ( ) NO
	Visually inspect red obstruction light function. The light is designed to turn on all the time.				Company Spec/Standard	(✓) YES ( ) NO
Operator Control Station	Check general condition of control panel, bolts, paint security, etc.				API RP 2D	(✓) YES ( ) NO
	Determine if there is a serviceable fire extinguisher in the vicinity of the crane				Company Spec/Standard	(✓) YES ( ) NO
	Determine if correct load chart is in use and easily visible for operator				API RP 2D	(✓) YES ( ) NO
	Determine if charts, indicators and hand signal chart are in the cabling and firmly attached				API RP 2D	(✓) YES ( ) NO
	Determine if angle/radius indicator plate is easily visible to operator and is moving freely.				API RP 2D	(✓) YES ( ) NO
	Check condition of control levers and determine if they "dead-man" back to the neutral position.				API RP 2D	(✓) YES ( ) NO
	Check condition of pressure gauges.				API RP 2D	(✓) YES ( ) NO
	Check proper control labels are firmly installed, completely legible and properly labeled				API RP 2D	(✓) YES ( ) NO
	Check controls for freedom-of-movement				API RP 2D	(✓) YES ( ) NO
	Check condition , Leak, freely moement of Dynamic swing break system *** Note; If HYD Oil loose in CYD reservoir must be refill*				OEM Manual	(✓) YES ( ) NO
	Check condition , Leak, freely moement of Accelerate System *** Note; If HYD Oil loose in CYD reservoir must be refill*				OEM Manual	(✓) YES ( ) NO
	Check all safety glass and rubber seal for proper condition				API RP 2D	(✓) YES ( ) NO ( ) N/A
	Function Test Horn. Note;.....				Industry Standard	(✓) YES ( ) NO ( ) N/A
	Ensure PRE/POST Check List and Pocket Manual in the cabin. Note;.....				Company Standard	(✓) YES ( ) NO ( ) N/A
Load Indicator System	Visual check on fittings and connections for leaks. Fix leak if any. Note:.....				OEM Manual	(✓) YES ( ) NO
	Should any leaks exist, stop leak and recharge system, refer to maintenance manual				OEM Manual	(✓) YES ( ) NO
	Change and flushing Load cell fluid.				OEM Manual	(✓) YES ( ) NO
	Check general condition of tubbing, hoses, pins bolts, paint, etc.				Industry Standard	(✓) YES ( ) NO
	Insure load cell is free of obstructions				OEM Manual	(✓) YES ( ) NO
	Check condition of gauge(s) face and clean glass as required.				OEM Manual	(✓) YES ( ) NO
	Check the scale's operation and weighing accuracy. (Main Hoist) Remark : Maximum variance +/- 2% Note;.....				Company Spec/Standard	(✓) YES ( ) NO ( ) N/A
	Check the scale's operation and weighing accuracy. (Aux. Hoist) Remark : Maximum variance +/- 2% Note;.....				Company Spec/Standard	(✓) YES ( ) NO ( ) N/A
	~~Check the internal casting fluid of weight indicator. top up if required~~				~~Industry Standard~~	(✓) YES ( ) NO ( ) N/A
	Insure SWL tag matches ratings on the Crane Load Chart.				OEM Manual	(✓) YES ( ) NO ( ) N/A
	Insure Boom Length, matches the Crane Load Chart				OEM Manual	(✓) YES ( ) NO ( ) N/A
	Insure Boom Angle measurements and readings match the boom angle indicator.				OEM Manual	(✓) YES ( ) NO ( ) N/A
	Insure Boom Radius measurements indicate the distance from center line of the crane to the hook				OEM Manual	(✓) YES ( ) NO ( ) N/A
	Check Main load cell gap 1/4 (0.250) inch				OEM Manual	(✓) YES ( ) NO ( ) N/A
	Check Aux load cell gap 3/8(0.380) inch (Compression Load Cell Type)				OEM Manual	(✓) YES ( ) NO ( ) N/A
Pedestal & Structure	Visually check Pedestal for chipped/cracked paint, deformation, worn parts, dents, corroded areas, cracks weld, etc.				API RP 2D	(✓) YES ( ) NO
	Check water rain drain at pedestal must be not obstuct				Industry Standard	(✓) YES ( ) NO

[redacted] / 10 Aug 25

SYSTEM	TASK	Specification	Record/Reading
	Check pin and cotter pin of pedestal missing , corrosion, wear, damage and exercise pin.	Industry Standard	(✓) YES ( ) NO
	Visually check Base - Plate connection and Base hoist Structure for chipped/cracked paint, deformation, worn parts, dents, corroded areas, cracks weld, etc.	API RP 2D	(✓) YES ( ) NO
	Check A fixed such as Handrial, Walkway, Grating, stationary structure without significant movement in response to waves and currents in normal operating conditions.	API RP 2C	(✓) YES ( ) NO
	Visually check and lubricate maintenance Jib. ***Note*** If on pedestal crane	OEM Manual	(✓) YES ( ) NO ( ) N/A
	Check maintenance jib is secure firmly. ***Note*** If on pedestal crane	OEM Manual	(✓) YES ( ) NO ( ) N/A
Box Boom & Luffing CYD	Check and Verify entire box boom and Boom CYD for loss of protective coating and corrosion. Note;.....	API RP 2D	(✓) YES ( ) NO
	Check and Verify entire box boom and Boom CYD for chipped/cracked paint, deformation, worn parts, dents, corroded areas, cracks, etc. Note;.....	API RP 2D	(✓) YES ( ) NO
	Check and Verify boom end connections, for bends, dents, corroded areas, cracked welds, and signs of mechanical damage, wear, etc. **any deviation should be reported**	API RP 2D	(✓) YES ( ) NO
	Check and Verify boom rest and wooden support to ensure it's in good condition	API RP 2D	(✓) YES ( ) NO
	Inspect pin and pin holes of Upper tank and Lower tank for excessive clearance	OEM Manual	(✓) YES ( ) NO
	BOOM CYLINDER PIN MAXIMUM TOLERANCE — 0.125 Inch (3mm)	Industry Standard	As found Good
	Check BOOM CYLINDERS for proper operation and good condition	API RP 2D	(✓) YES ( ) NO
	Check Boom cylinder barrels and rods for leaks, mechanical damage and corrosion	Industry Standard	(✓) YES ( ) NO
	Check and measurement boom foot pin and connection pins for clearance	Industry Standard	
	BOOM FOOT PINS & BOOM BOX CONNECTER PIN TOLERANCE — 0.125 Inch (3mm)	Industry Standard	
	Boom Foot Pin Tolerance	Industry Standard	0.026 Inch
	Boom Box Connecter Pin Tolerance	Industry Standard	0.022 Inch
	Check connecting bolts of box boom loose, corrosion, wear, damage	OEM Manual	(✓) YES ( ) NO
	Lubricate boom foot pins and bushings	OEM Manual	(✓) YES ( ) NO
	Lubricate boom cylinder pins, bearings and bushings	OEM Manual	(✓) YES ( ) NO
	Boom function test angle/radius to correction **Note; The cylinder(s) mechanism shall be capable of elevating the boom from a minimum of zero degrees to the maximum recommended boom angle.	API RP 2C	(✓) YES ( ) NO
	Operation functional test and verify Boom Creeping down **Note ; Test at angle 60°	Industry Standard	(✓) YES ( ) NO As found Good
Wire Rope	Determine if parts-of-line match parts of line on the load chart in the crane cabin.	API RP 2D	(✓) YES ( ) NO
	Determine if visible portion of wire rope adequately lubricated. If not lubricate wire rope	API RP 2D	(✓) YES ( ) NO
	For each layer of wire rope on drum, check that all rope is parallel and each crossover point at hoist flanges is correct	API RP 2D	(✓) YES ( ) NO
	The top layer of rope must not be lower to the flange tips 2.5 in for Smooth drum,2 in for groove drum or 2.5 times of wire rope diameter	API RP 2C	(✓) YES ( ) NO
	Inspect wire rope for, kinking, crushing, broken wires, necking down of rope diameter, worn outside wires, corroded or broken wires at end connection, cutting or unstringing.	API RP 2D	(✓) YES ( ) NO As found Good
	NoteRunning Ropes of rotation-resistant construction used in the main or auxiliary Hoist: - Four (4) Randomly distributed broken wires within 30 rope diameter - Two (2) broken wires in one stand within 6 rope diameter	API RP2D Edition 7	(✓) YES ( ) NO As found Good
	One valley break can indicate internal rope damage requiring close inspection of this section of the rope. When one or more valley breaks are found in one lay length the rope should be retired.	API RP2D Edition 7	(✓) YES ( ) NO As found Good
	Reductions for the rope diameter, from initial wire rope dimensional measurements, in a nonworking area (an area away from the sheaves) compared to the lowest diameter of rope measured in three working areas (areas where the rope regularly goes over a sheave) of more than the following is observed: — 3/64 in. (0.047 in.) (1.2 mm) for diameters up to and including 3/4 in. (19.1 mm); — 1/16 in. (0.062 in.) (1.6 mm) for diameters of 7/8 in. to 1-1/8 in. (22.2 mm to 28.6 mm); — 3/32 in. (0.093 in.) (0.8 mm) for diameter of 1-1/4 in. to 1-1/2 in. (31.8 mm to 38.1 mm); — For rope diameters greater than 1-1/2 in., a 5 % diameter loss from baseline measurement. —Wear of one-third the original diameter of the outside individual wires.	API RP2D Edition 7	(✓) YES ( ) NO As found dimension Good
	Increase in the length of an individual rope lay is observed. This increase in lay length and accompanying reduction in diameter can be caused by failure of the core. This can occur more readily in ropes or rotation-resistant construction.	API RP2D Edition 7	(✓) YES ( ) NO As found Good
	-Inspection and Verify running and standing rope from heat effect **Note; Not more than 250°C -There is evidence of heat damage from any source (i.e. engine exhaust, flare towers, stress corrosion cracking, etc.). Heat can be generated by passing a rope over a frozen or non-turning sheave, contact with structural members of the crane, improperly grounded welding leads or lightning strikes	Industry Standard	(✓) YES ( ) NO As found Good
	With the boom at the highest possible angle and the main load block or overhaul ball at the water level, ensure there is a minimum of 5 wraps of wire-rope remaining on the drums. Note: (Thai law, requires minimum of 2 wraps)	API SPEC 2C / Thai Law	( ) YES ( ) NO
	Reference: - Running rope safety factor not less than 6 for wire rope that are running wire, (Thai law; Wire rope nominal breaking strength x number parts of line / Design factor 6) - Standing rope safety factor not less than 3.5 for wire rope that are stay cables, (Thai law)	Thai Law	( ) YES ( ) NO ( ) N/A
	Measure and record nominal diameter of "running ropes"main and auxiliary (particularly on drum, equalizer sheave and at sockets, clips and dead end points) *****Nominal = several measurements added together divided by Number of measurements*****	API RP 2D	( ) YES ( ) NO
	Inspect wire rope and record dimension.	API RP 2D	
	MAIN WIRE ROPE OD: — FULL DRUM	OEM Manual	0.665 Inch
	MAIN WIRE ROPE OD: — HALF DRUM	OEM Manual	0.662 Inch
	MAIN WIRE ROPE OD: — WATER LEVEL	OEM Manual	0.650 Inch
	AUX WIRE ROPE OD: — FULL DRUM	OEM Manual	0.642 Inch
	AUX WIRE ROPE OD: — HALF DRUM	OEM Manual	0.652 Inch
	AUX WIRE ROPE OD: — WATER LEVEL	OEM Manual	0.655 Inch
	Slip-Cut 1 meter of all ropes at the wedge socket and re-wedge to prevent rust inside of wedge socket (at outward end of rope, not on hoist drum) Dead end tail length is never less than 6 inches, or: - Standard 6 to 8 Strand wire rope is not less than 7 times the rope diameter - Rotation Resistant Wire Rope is not less than 20 times the rope diameter	Company Spec/Standard	(✓) YES ( ) NO
	U-bolt and Fist Grip Clips: Extreme care should be exercised to assure proper orientation of U-bolt clips. The U-bolt segment shall be in contact with the wire rope dead-end. The orientation, spacing, torquing, and number of all clips shall be in accordance with the crane manufacture's specifications.	API SPEC 2C	( ) YES ( ) NO

[redacted] / 10 Aug 25

SYSTEM	TASK	Specification	Record/Reading
	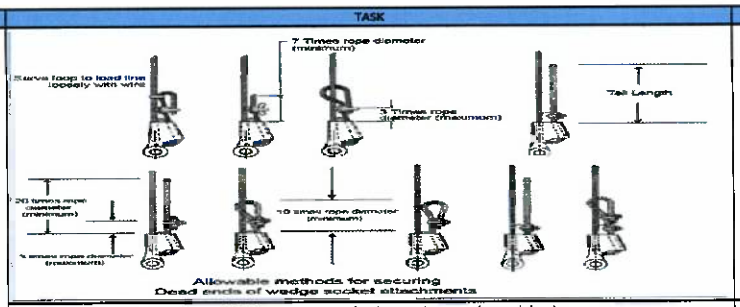 Allowable methods for securing Dead ends of wedge socket attachments	API SPEC 2C	Model and Size wedge socket. Main hoist. Model..... Size.....5/8..... Aux.Hoist. Model..... Size.....5/8.....
	Verify that the wedge socket and wedge are the correct size for the rope in use and record the size	API SPEC 2C	(✓) YES ( ) NO
Sheaves & Bearings	Lubricate all sheave bearings.	API RP 2D	(✓) YES ( ) NO
	Visually inspect all sheaves and bushings for cracks, wear and deterioration	API RP 2D	(✓) YES ( ) NO As found.....Good.....
	Visually inspect wire rope truck of sheave for rope imprints, wear and deterioration. If damage exist sheave should be resurfaced or replaced.	API RP 2D	(✓) YES ( ) NO As found.....Good.....
	Pins retained by snap rings, bolt lock shafts, plates lock should be checked for missing or loose for all	API RP 2D	(✓) YES ( ) NO
	Check wirerope guards and keepers for proper location and condition.	API RP 2D	(✓) YES ( ) NO
	Determine if wire rope is jumping the sheaves, by looking for signs of damage on the sheave brim	Industry Standard	(✓) YES ( ) NO
	Sheave Rope Profile for optimum Rope life the sheave groove profile should be correctly matched to the rope diameter	Industry Standard	(✓) YES ( ) NO
	Check rope sheave should be machine grooved to adepth of not less than 1.5 times the norminal diameter of the rope	Industry Standard	(✓) YES ( ) NO
	MAIN POINT SHEAVES: Note;.....Good.....	Industry Standard	No.1 (✓) YES ( ) NO No.2 (✓) YES ( ) NO
	AUX SHEAVES: Note;.....Good.....	Industry Standard	No.1 (✓) YES ( ) NO
	IDLER SHEAVES: Note;.....Good.....	Industry Standard	AUX. (✓) YES ( ) NO Main (✓) YES ( ) NO
	Pins for bronze bushing and straight roller bearing should have a running clearnace of .031 inch/ sheave of end play and should be adjusted accordingly.(count from left)	Industry Standard	( ) YES ( ) NO
	MAIN POINT SHEAVES:	Industry Standard	Sheave No.1 0.003 inch Sheave No.2 0.003 inch
	AUX SHEAVES:	Industry Standard	Sheave No.1 0.004 inch
	IDLER SHEAVES:	Industry Standard	Sheave AUX 0.003 inch. Sheave Main 0.003 inch.
	Ensure the sheaves are aligned and the fleet angle is correct **Remark ; Wire rope User's Manual allows 2 degree on grooved winch drum, Smooth Drum shuold be not more than 1-1/2 degree	API RP 2D	(✓) YES ( ) NO
	Determine if wire rope size and sheave sizes/grooves are compatible and record size. Sheave pitch diameter (D) to nominal wire rope diameter (d) ratio (D/d) shall not be less than 18:1	API SPEC 2C	(✓) YES ( ) NO
	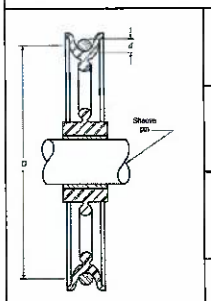 MAIN POINT SHEAVES: SHEAVE D / WIRE ROPE d = >18	API SPEC 2C	18 inch (D) 5/8 inch (d) 28 (Ratio D/d)
	AUX SHEAVES: SHEAVE D / WIRE ROPE d = >18	API SPEC 2C	14 inch (D) 5/8 inch (d) 22 (Ratio D/d)
	IDLER SHEAVES: SHEAVE D / WIRE ROPE d = > 18 (If applicable)	API SPEC 2C	18 inch (D) 5/8 inch (d) 28 (Ratio D/d)
	MAIN BLOCK SHEAVES: SHEAVE D / WIRE ROPE d = > 16	API SPEC 2C	16 inch (D) 5/8 inch (d) 25 (Ratio D/d)
Load Block	Load Block: Check the load block for cleanliness, binding sheaves, damaged or worn sheaves, worn or distorted sheave pins, broken bolts, and worn check weights. Note ;.....	Industry Standard	(✓) YES ( ) NO As found.....Good.....
	Hook: Check the hook damage, excessive wear to the hook safety latch, hook swivel trunnions, thrust collar, securing, damage or missing lubrication fittings, proper lubrication, cracks and gouges, and if visibly bent or twisted or has been exposed to welding or arching. Note ;.....	Industry Standard	(✓) YES ( ) NO As found.....Good.....
	Hook: Tip has been bent more than 10 degree out of plane from the hook body	Industry Standard/API RP2D7	(✓) YES ( ) NO As found.....Good.....
	Inspect the Pins for bronze bushing and straight roller bearing should have a running clearnace of .031 inch/ sheave of end play and should be adjusted accordingly	Industry Standard	(✓) YES ( ) NO
	Inspect Hook or shackle to swivel case clearance is set at .031 to .062 inch, Clearance exceeding .12 to .18 (ONLY CROSBY BRAND)	OEM Crosby	( ) YES ( ) NO
	OEM STANDARD RECOMMEND that Crane block removal from service untill replaced and repair following below	OEM STANDARD	
	- Elongated center pin and hook trunnion holes exceeding 5% of Original diameter	OEM STANDARD	(✓) YES ( ) NO As found.....Good.....

[redacted] / 10 Aug 25

SYSTEM	TASK	Specification	Record/Reading
	-Material loss due to wear exceeding 10% of original section	OEM STANDARD	(✓) YES ( ) NO As found ✓
	-Sheave wire rop groove diameter smaller then 2.5%	OEM STANDARD	(✓) YES ( ) NO As found Good
	Loosened tie bolts nuts, center pin round nuts, check weight cap screws and hook nut cap screws. Tie bolt nuts to be torqued to 35-40 ft.Lbs and restaked, all other fasteners wrench tight	OEM STANDARD	(✓) YES ( ) NO
	Throat opening - any distortion causeing an increase in throat opening of 5% not ot exceed 1/4 in. (6 mm.)(or as recommended by the manufacturer)	ASME B30.10	(✓) YES ( ) NO
	Inspect rope track worn in sheave groove, sheave must be resurface or replace	API RP 2D	(✓) YES ( ) NO
	Ensure the load block is not using "Cast Iron" check weights they can not be used as per API	API SPEC 2C	(✓) YES ( ) NO As found YES
	Determine if all hooks are equipped with properly operating safety latches and check for proper functioning	API RP 2D	(✓) YES ( ) NO
	Lubricate sheave bearings and swivels	OEM Manual	(✓) YES ( ) NO
	Re-thighten nut firmly to point at which trunion will just rotate, the Re-tighten set-screw in nut and thread condition as in the picture below,	Industry Standard	(✓) YES ( ) NO
	Last NDE inspection record	Industry Standard	Last inspect date _____
	RECORD LOAD BLOCK INFORMATION : Manufacturer:	OEM Manual	MCKISSICK
	Model:	OEM Manual	M095D1611
	Serial Number:	OEM Manual	0596160
	Record Load block measurements and details for future comparison with historical data	Industry Standard	(✓) YES ( ) NO
	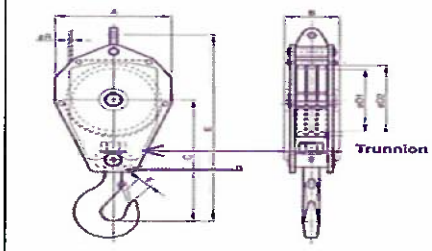 A - Block OD	Industry Standard	19.5 mm/ inch
	B - Block length	Industry Standard	13 mm/ inch
	C - Center of Pin to hook Saddle	Industry Standard	25-1/4 mm/ inch
	D1 - Sheave Diameter	Industry Standard	16 mm/ inch
	E - Block Width	Industry Standard	32 mm/ inch
	F - Throat Opening	Industry Standard	7 mm/ inch
	G - Trunnion	Industry Standard	0.021 mm/ inch
Aux. Ball	Inspect Auxiliary ball for cleanliness, binding swivel, work pad-eye hole. Inspect the hook damage, excessive wear to the hook safety latch, Bent connector plates,Severe corrosion pitting, hook swivel trunnions, thrust collar, securing, damage or missing lubrication fittings,Loose, missing or damaged retaining nuts, cotter pins or swivel set screws ,Missing or illegible rating and warning tags, proper lubrication, cracks and gouges, and if visibly bent or twisted or has been exposed to welding or arching.	Industry Standard	(✓) YES ( ) NO
	Hook: Tip has been bent more than 10 degree out of plane from the hook body	Industry Standard/API RP2D7	(✓) YES ( ) NO
	OEM STANDARD recommend that Crane overhaul ball removal from service untill replaced and repair following below	OEM STANDARD	
	- Elongated ball pin holes, hook latch pin holes and swivel eye exceeding 5% of original diameter,	OEM STANDARD	(✓) YES ( ) NO As found Good
	-Swivel end play gap exceeding .08". Excessive end play indicates damaged internal set screw	OEM STANDARD	(✓) YES ( ) NO As found Good
	-Material loss due to wear exceeding 10% of original section	OEM STANDARD	(✓) YES ( ) NO As found Good
	Throat opening - any distortion causeing an increase in throat opening of 5% not ot exceed 1/4 in. (6 mm.)(or as recommended by the manufacturer)	ASME B30.10	(✓) YES ( ) NO
	All hooks that lift personnel are to have a positive locking safety latch **locking Pin to be used while lifting personnel**	API RP 2D	(✓) YES ( ) NO
	*** Temperature Effected : When hooks are to be used at temperature above 400° F. (204°C) or below -40°F (-40°C), the hook manufacturer or a qualified person should be consulted *** Chemically Active Environment : The strength of hooks can be affected by chemically active environments, such as caustic or acid substances or fumes. The hook manufacturer or qualified person should be consulted before hooks are used in chemically active environment	ASME B30.10	
	Verify to ensure nut firmly at which trunion rotate. Identify to set-screw in nut/ swivel/ counter pin and thread condition.	Industry Standard	(✓) YES ( ) NO
	Last NDE inspection record	Industry Standard	Last inspect date _____
	RECORD AUX BALL INFORMATION : Manufacturer:	OEM Manual	MCKISSICK
	Model:	OEM Manual	M807T200E
	Serial Number:	OEM Manual	0641200
	Record Auxiliary Ball measurements and details for future comparison with historical data: For Model M807T200E ONLY	Industry Standard	
	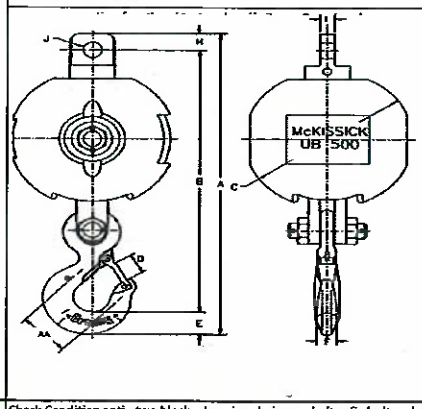 AA Dimensions 3.0 Inch	Industry Standard	3.0 mm/ inch
	A Dimensions 24.89 Inch	Industry Standard	24.8 mm/ inch
	B Dimensions 21.71 Inch	Industry Standard	21.7 mm/ inch
	C Dimensions 12.50 Inch	Industry Standard	12.5 mm/ inch
	D Dimensions 1.61 Inch	Industry Standard	1.6 mm/ inch
	E Dimensions 1.81 Inch	Industry Standard	1.8 mm/ inch
	F Dimensions 1.38 Inch	Industry Standard	1.9 mm/ inch
	H Dimensions 1.38 Inch	Industry Standard	1.9 mm/ inch
	I Dimensions 0.88 Inch	Industry Standard	0.8 mm/ inch
	J Dimensions 1.31 Inch	Industry Standard	1.3 mm/ inch
Safety system	Check Condition anti - two block , hanging chain ,eye bolts , fix bolts , shackle for missing , corrosion , erosion , deformation	API RP 2D	(✓) YES ( ) NO
	Check anti - two block kick out plate for freely movement	Company Spec/Standard	(✓) YES ( ) NO
	Check anti-2-block device proper function of Main winch	Company Spec/Standard	(✓) Function ( ) False

[redacted] / 10 Aug 25

SYSTEM	TASK		Specification	Record/Reading
	Check anti-2-block device proper function of Aux. winch		Company Spec/Standard	(✓) Function ( ) False
	Check relation of boom radius and boom angle (lowest, middle, highest) with refrence to load chart. Recharge fluid W-15 to load indicator, if required.		API RP 2D	(✓) YES ( ) NO
	Functional test of emergency lowering system (See procedure in Emergency Load Lowering Box). **Note:** Keep for 1 Yr PM to sustain crane mechanic competency. **Caution:** Function test must be performed on top deck with max 2-foot height.		Company Spec/Standard	(✓) YES ( ) NO ( ) N/A
	Visually check emergency load lowering kit. Ensure EMERGENCY LOWERING PROCEDURE and MATERIAL LIST are in the box. - Ensure ALL items shown on the list are in the box and in good condition - SECURE THE BOX WITH A TIE WRAP.		Company Spec/Standard	(✓) YES ( ) NO ( ) N/A
Slew Mechanism	Visually check for damage and excessive wear on gear teeth		OEM Manual	(✓) YES ( ) NO
	Visually check slew gear box in the area of oil seal for any leaks		API RP 2D	(✓) YES ( ) NO
	RECORD SLEW GEAR BOX INFORMATION :	Manufacturer:	OEM Manual	ESK
		Model:	OEM Manual	250 A
		Serial Number:	OEM Manual	—
	CHECK and RE-TORQUE swing drive gearbox mounting bolts at following brands: - ESKRIDGE, Model: 250 = 150 FT-LBS		API RP 2D	(✓) Yes ( ) No
	Check swing gearbox oil level/condition, top up if required	Meropa 220	OEM Manual	(✓) YES ( ) NO
	Monitor slew gearbox oil condition by visually examine for burnt smell, metal particles, and/or other contaminants, record and change if found.	Meropa 220	OEM Manual	(✓) CHANGE OIL ( ) NOT CHANGE OIL
	Change slew gear box oil	Meropa 220	OEM Manual	(✓) CHANGE OIL ( ) NOT CHANGE OIL
	Grease all pivot points of slew ring (bearing)		OEM Manual	(✓) YES ( ) NO
	Grease open gears (pinion)		OEM Manual	(✓) YES ( ) NO
	Rotate crane 360 degree and check smoothness of operation		OEM Manual	(✓) YES ( ) NO
	Check swing drive static parking brake for proper operation Caution: DO NOT stop the swing of the crane with this static brake (parking brake)		OEM Manual	(✓) YES ( ) NO
	Check swing drive dynamic parking brake for proper operation		OEM Manual	(✓) YES ( ) NO
	Check swing lock mechanism condition; corrosion, dent, loos all part,worn and wear		OEM Manual	(✓) YES ( ) NO As found condition: Good
	Check swing lock mechanism freely lock and unlock for function. **Check and inspect for hydraulic for leaks on actuator model.**		OEM Manual	(✓) YES ( ) NO As found condition: Good
	Check condition of slew ring bolts e.g. Bolt grade and washers. Caution: Use only hardened flat washers under head of bolt. Do not use lock washers, or regular flat washers.		Industry Standard	(✓) YES ( ) NO As found condition: Good
	Monitor ball-ring grease sample. If found wear and tear particles, take sample and send to lab. **Wear assessment by grease sample analysis—wear may be monitored by periodic grease sample analysis as describe in this section. Grease samples should be collected every twelve months as a minimum and the results of the analysis recorded; this period should be shortened if obvious metal or contaminants are present.		API PR 2D	( ) SEND TO LAB (✓) NOT SEND TO LAB As found: Good
	Verify crane condition and load test as separate procedure. **Table 1—Static/Onboard Test Load and Radius** Static/Onboard Rated Load at a Specific Radius lb (kg) / Test Loads In Excess of Static/Onboard Rated Load at a Specific Radius ≤ 40,000 (18,144) / 25 % > 40,000 ≤ 100,000 (>18,144 ≤ 45,356) / 10,000 lb (4536 kg) > 100,000 (45,356) / 10 %		API 2C	(✓) YES ( ) NO Specific test load.....lbs.
	Verify crane condition and load test as separate procedure. " Record crane load test in load test form."		Company Standard	(✓) YES ( ) NO

Risk Level Definitions: The following 3 levels indicate the impact the noted deficiency poses to the operation or structural integrity of the equipment:

Level 1 = Incidental	Level #2 = Restricted Operation	Level #3 =Out of Service
Minor deficiency that is recommended to be promptly addressed, but poses no safety and/or environmental risk. The crane can still be operated at full duty.	Deficiency identified that has the potential to limit, de-rate or damage the crane, its surroundings and/or the environment. The duty and locked/ tagged out until the crane's duty and operation should be de-rated or service restricted.	The crane should be removed from duty and locked/ tagged out until the deficiency is rectified.

System:	Risk Level:	Component: / Location:	In Accordance with: / Date Originated:
Description:	HYD. - 20x250" from DCV to Aux winch 2 ea HYD - 20x220" from DCV to Main winch 1 ea		
Recommended Action:			
Recommended urgency timeframe for corrective action:	Next PM.	Completed Date:	Completed By:

System:	Risk Level:	Component: / Location:	In Accordance with: / Date Originated:
Description:			
Recommended Action:			
Recommended urgency timeframe for corrective action:		Completed Date:	Completed By:

System:	Risk Level:	Component: / Location:	In Accordance with: / Date Originated:
Description:			
Recommended Action:			

[redacted] / 10 Aug 25

SYSTEM	TASK			Specification		Record/Reading
Recommended urgency timeframe for corrective action:			Completed Date:		Completed By:	

System:	Risk Level:	Component:		In Accordance with:
		Location:		Date Originated:
Description:				
Recommended Action:				
Recommended urgency timeframe for corrective action:			Completed Date:	Completed By:

System:	Risk Level:	Component:		In Accordance with:
		Location:		Date Originated:
Description:				
Recommended Action:				
Recommended urgency timeframe for corrective action:			Completed Date:	Completed By:

System:	Risk Level:	Component:		In Accordance with:
		Location:		Date Originated:
Description:				
Recommended Action:				
Recommended urgency timeframe for corrective action:			Completed Date:	Completed By:

Job Completed

[redacted] day 1

day 1

day 1

8 Aug 25

THE PEDESTAL CRANE CONDITION VERIFICATION

Date : 8 AUG

Crane Owner : CTEP/ COTL Field: BENCHAMAS Platform/ Vessel: MAWG

Crane Owner 's representative : (Mech Supv./ M'Dent) [redacted]

Qualified inspector : (Qualified Crane Mechanic)

Inspector 's company / agency : (Third Party or Outsource to witness if applicable)

Manufacture NAUTILUS Fabrication by oil states Year of Fabrication DEC 2006 Country USA

Model / Serial 18081-80(MS) / 99206C Standard API Edition 6 Edition 2004

			Remark
Safe Working Load (SWL) --> OEM	14.52 Metric Tonnes		
Safe Working Load (SWL) --> Existing via MOC, if applicable	– Metric Tonnes		
Boom length, Main	80 Ft		
Boom length, Auxiliary if applicable	– Ft		
Part of line main hoist	4 Part line		
Part of line auxiliary hoist	1 Part line		
Safe Working Load at longest boom radius	80 ft	3.0 Metric Tonnes/ Lbs	
Safe Working Load at shortest boom radius	13 ft	14.52 Metric Tonnes/ Lbs	
The document of crane specification for Testing , Maintenance and Inspection are provided by:	OEM	MOC / Crane Engineer	
Has the crane ever been modified by MOC ? (To verify if this crane is modified with MOC --> Allow to test the crane. If this crane is modifed without MOC --> Not allow to test the crane)	YES	NO	(Employers are not allowed to modify or adjust any part of cranes or dericks or consent to other persons to do these things, that might reduce the safety of the employees who work with the cranes or derricks).
Does the rotating part have proper guard in place?	YES	NO	(Need mitigation plan)
Is the ladder and hand rail in place?	YES	NO	(Need mitigation plan)
Is the maintenance platform in place?	YES	NO	(Need mitigation plan)
Is the SWL tag labelled on crane pedestal, main block or aux ball?	YES	NO	(Need mitigation plan)
Verify if the crane major component damaged or not	YES (Need to repair or mitigate unsafe condition with MOC before testing)	NO	(Employers shall not allow employees work with damaged/ unsafe cranes or derricks)
Inspect boom end connections, for bends, dents, corroded areas, cracked welds, and signs of mechanical damage, wear, etc. **any deviation should be reported** Level 1 = Incidental : Minor deficiency that is recommended to be promptly addressed, but poses no safety and/or environmental risk. The crane can still be operated at full duty. --> Allow to test Level #2 = Restricted Operation: Deficiency identified that has the potential to limit, de-rate or damage the crane, its surroundings and/or the environment. The duty and locked/ tagged out until the crane's duty and operation should be de-rated or service restricted. --> To be derated Level #3 = Out of Service;The crane should be removed from duty and locked/ tagged out until the deficiency is rectified. --> Not Use	YES (To be verified)	NO	

Function Load Testing

1. Verify Crane SWL (Existing)	3.0 Metric Tonnes		
2. Verify routine maximum actual load.	2.4 Metric Tonnes		
3. Select the specimen load to be more than actual routine load 1.25 times but not more than SWL. Example # 1 : Crane 's SWL is 18 Metric Tonnes. The routine maximum actual load is 2.4 Metric Tonnes. Therefore, the load testing shall be 2.4 x 1.25 = 3 Metric Tonnes. Example # 2 : Crane 's SWL is 18 Metric Tonnes. The routine maximum actual load is 16 Metric Tonnes. By calculation, the load testing is 16 x 1.25 = 20 Metric Tonnes more than SWL (18 MTon). Therefore, the load testing shall be 18 Metric Tonnes equal to SWL.	3.0 Metric Tonnes		
4. Use Auxiliary Winch if specimen load less than or equal 3 Metric Tonne	YES	NO	
5.Use Main Winch if specimen load more than 3 Metric Tonne	YES	NO	
6. The record of load testing : Fill in "Function Test Record" sheet attached.			

RECORDED FUNCTION TEST PROCEDURE

1. CHECK AND RECORD READING RADIUS AND BOOM INDICATIOR AT FOUR (4) VALUES INCLUDING MAXIMUM AND MINIMUM.

(ALL REDIUS MEASUREMENT ARE TO BE TEKEN FROM THE CENTERLINE OF CRANE ROTATION)

ACTUAL	INDICATED RADIUS (FT)
A) 15' (MINIMUM)	15
B) 20'	20
C) 25'	25
D) 30' (INTERMIDIATE)	30
E) 40'	40
F) 50' (INTERMIDIATE)	50
G) 60'	60
H) 75' (MAXIMUM)	75

2. CHECK AND RECORD READING ON BOOM ANGLE / DEGREES.

SPECIFICATION		INDICATED BOOM ANGLE (DEGREES)
1). MAXIMUM.	81 DEGREES	81
2). INTERMEDIATE.	60 DEGREES	60
3). INTERMEDIATE.	40 DEGREES	40
4). MINIMUM.	0 DEGREES	0

3. READING ON LOAD INDICATOR WITHOUT SLINGS OR LOAD / LBS. (LOAD BLOCK + WIRE ROPE)

ACTUAL		INDICATOR READ FREE LOAD, (LBS)
1). MAXIMUM RADIUS	LBS.	700
2). MINIMUM RADIUS	LBS,	790

4. CHECK AND RECORD ENGINE HIGH IDLE SPEED / RPM.

SPECIFICATION			INDICATED OF FUNCTIONAL (RPM)
1). IDLE SPEED	850	RPM	850
2). LOW SPEED	–	RPM	–
3). HIGH SPEED	2200	RPM	2200

5. FUNTIONALLY TEST THE FOLLOWING.

ACTUAL	INDICATED OF FUNCTIONAL (TESTED)
A) MAIN HOIST ANTI -TWO BLOCK.	function
B) AUXILIALY HOIST ANTI -TWO BLOCK.	function
C) HIGH BOOM ANGLE KICK OUT.	N/A
D) LOW BOOM ANGLE KICK OUT.	N/A
E) PRIME MOVER SHUTDOWN.	Function
F) EMERGENCY SHUTDOWN.	function
G) ROTATE CRANE 360 LEFT.	SMOOT
H) ROTATE CRANE 360 RIGHT.	SMOOT

6. RECORD HYDRAULIC RELIEF VALVE PRESSURE SETTING ON FOLLOWING HYDRAULIC FUNCTION:

SPECIFICATION			INDICATED PRESSURE (PSI)
A) MAIN HOIST	3085	PSI.	3085
B) AUXILIALY HOIST	2800	PSI.	2800
C) BOOM HOIST	3000	PSI.	3000

TEST CONDUCTED BY: [redacted] POSITION : CR-MECH

CRANE OPERATOR : [redacted] POSITION : CR-MECH

COMMENTS : DATE : 8 AUG 25

CRANE Mfg. : Nautilus
MODEL: 180B1-80 (MS)
SERIAL NUMBER :

LOCATION
BEWV

DATA BASE - PM JOB TASK CARD

Crew Size: 4
Estimated Hours: 1728 Hrs

SYSTEM	TASK		Specification	Record/Reading
Safety	Perform Job Safety Analysis (JSA)		Company Spec/Standard	(✓) YES ( ) NO
	Obtain "COMPANY" PERMIT TO WORK		Company Spec/Standard	(✓) YES ( ) NO
	Perform Tool Box Talk		Company Spec/Standard	(✓) YES ( ) NO
	BEFORE/AFTER JOB EXECUTION: Ensure to comply with isolation procedure (LOCK OUT/TAG OUT, WARNING SIGNS and BARRIERS).		Company Spec/Standard	(✓) YES ( ) NO
Required Tools	Insure proper tools are available at the job site		Company Spec/Standard	(✓) YES ( ) NO
	Tool bag		Company Spec/Standard	(✓) YES ( ) NO
	Tool box		Company Spec/Standard	(✓) YES ( ) NO
	Tool Container		Company Spec/Standard	(✓) YES ( ) NO
	MPI equipment and operator		Company Spec/Standard	(✓) YES ( ) NO
	Check safety harness Software and Hardware should be good condition before use		Company Spec/Standard	(✓) YES ( ) NO
	Check Rescue Equipment ready to use onsite		Company Spec/Standard	(✓) YES ( ) NO
	Portable Scaffolding and Crew if require		Company Spec/Standard	(✓) YES ( ) NO
Lubricants	Insure proper lubricants and consumables are available at the job site.		Company Spec/Standard	(✓) YES ( ) NO
	Hydraulic System - Hydraulic Oil	Rando HD-68	OEM Manual	(✓) YES ( ) NO
	Slew Gearbox - Gear Oil	Meropa 220	OEM Manual	(✓) YES ( ) NO
	Auxiliary Hoist - Gear Oil	Meropa 220	OEM Manual	(✓) YES ( ) NO
	Main Hoist - Gear Oil	Meropa 220	OEM Manual	(✓) YES ( ) NO
	Grease Points - Lithium Based **IT MUST NOT INCLUDE MOLYBDENUM DISULPHIDE**	MULTIFAK EP#2	OEM Manual	(✓) YES ( ) NO
	Open Gear Teeth - Open Gear Lube highly water resistant and of an adhesive nature.	OMEGA 73	OEM Manual	(✓) YES ( ) NO
	Pneumatic Lubricator	SAE Grade 10	OEM Manual	(✓) YES ( ) NO
	Wire rope Lubricant Company preferred grade	Biriuba 70	OEM Manual	(✓) YES ( ) NO
	Engine Oil - SAE Grade 15W-40 (Delo Gold)	15W-40	OEM Manual	(✓) YES ( ) NO
	Safe Load Indicator fluid	W-15	OEM Manual	(✓) YES ( ) NO
	Engine Radiator - Should have radiator preservatives additives	Cat® SCA	OEM Manual	(✓) YES ( ) NO
Consumables	Spray Cold Galvanize		Company Spec/Standard	(✓) YES ( ) NO
	Denso Tape		Company Spec/Standard	(✓) YES ( ) NO
	WD-40		Company Spec/Standard	(✓) YES ( ) NO
History Review	Before starting work, tasks preparation at least 1 day prior to starting work: 1. Review history PM/ CM from Roving Team, 2. Review last PM/ CM/ PMI from Crane Mech, 3. List out all punch list and prepare parts. 4. Review last Certificate task performed		API RP 2D	(✓) YES ( ) NO
	Require to update part history from Crane Mech on following main compenents to ensure the right parts are prepared: - Aux/ Main/ Boom Cylinder, Engine, Swing Gearbox, etc. **Reference:** Crane OEM information of each part need to be recorded - Manufacturer & Contact info - Model & serial number - Installation date		Company Spec/Standard	(✓) YES ( ) NO
	Review history data from Certificates and incorporate into current PM: - Pull Test Certificates (ongoing update, 4 yr. history). - Load Test Certificates (ongoing update, 4 yr. history). - Wire Rope Certifications (running rope and standing rope) (life of rope). - Hoist Certifications for hoist classified as "personnel handling" hoist.		API RP 2D	(✓) YES ( ) NO
	Review Last Preventative Maintenance Records (Inspection Reports) - Pre-use (Pre-Post Inspection) - 6 Monthly (API RP 2D Not Defined, Company Standard) - 1 Yearly (API RP 2D Defined Annual Inspection)		API RP 2D	(✓) YES ( ) NO
Lifting Gear Preparation	Visually inspect (Sling, sling hooks and shackles) include Webbing / Chain		Company Spec/Standard	(✓) YES ( ) NO
	Check color code / Tag & date inspection		Company Spec/Standard	(✓) YES ( ) NO
General	Determine if access route to-from crane is clean, safe, unobstructed and adequately protected against falls, tripping and slipping		Company Spec/Standard	(✓) YES ( ) NO
	Check drain lines and drip pans for deterioration		API RP 2D	(✓) YES ( ) NO
	Remove any sediment collected in the bottom of drip pans		Industry Standard	(✓) YES ( ) NO
	Check for general crane and components for loss of protective coating and corrosion		Industry Standard	(✓) YES ( ) NO
	Check for missing or loose ,corrosion, deformation pins, pin keepers, bolts, nuts, fasteners of all laders, cages and working platform		API RP 2D	(✓) YES ( ) NO
	Apply grease to exposed grease parts (control valve spools, ball-ring gear, parking brake valve, etc.)		OEM Manual	(✓) YES ( ) NO
Prime Mover	Engine CUMMIN		OEM Manual	(✓) YES ( ) NO
	CUMMIN Model : C8.3	**S/N.:**	OEM Manual	_____
		AR.No.:	OEM Manual	_____
	Change engine lube oil & oil filter and check the condition of old oil. As found ;		OEM Manual	(✓) YES ( ) NO
	Check diesel tank level, top up if required.		OEM Manual	(✓) YES ( ) NO
	Check / Clean crankcase breather cap. Change if required		OEM Manual	(✓) YES ( ) NO
	Check / Clean air cleaner filter, Replace if require. (Note : Include inspect air cleaner housing)		OEM Manual	(✓) YES ( ) NO
	Check condition and inspect of the radiator and cap.		OEM Manual	(✓) YES ( ) NO
	Check for any signs of leaks on or around the engine ie: Crankshaft seal for front & rear seal , Engine oil cooler. As found:		OEM Manual	(✓) YES ( ) NO
	Check condition exhaust system for leaks, corrosion, insulation and general. As found ;		OEM Manual	(✓) YES ( ) NO
	Check condition of all engie hoses and tube. (Fuel supply,Cooling system and Lube oil system. As found:		OEM Manual	(✓) YES ( ) NO
	Drain water and sediment form diesel tank. As found ;		OEM Manual	(✓) YES ( ) NO
	Check / Clean Diesel tank level sightglass and diesel tag.		OEM Manual	(✓) YES ( ) NO
	Apply grease of fan bearing/shaft.		OEM Manual	(✓) YES ( ) NO
	Check that neither the top nor bottom tensioner arm stop is touching the cast boss on the tensioner body for CUMMINS engine as picture		OEM Manual	(✓) YES ( ) NO
	Change water coolant and check condition base of water coolant and record PH.		OEM Manual	(✓) YES ( ) NO
	COOLANT PARAMETERS (PH):	6 or higher	OEM Manual	PH = 7
	HOUR METER PARAMETERS:	LAST READING 1726 HRS	OEM Manual	1728 HRS

SYSTEM	TASK			Specification	Record/Reading
	Check and retigthen the bolts of all engine base. / Inspection mouting rubber. As found ;.....			OEM Manual	(✓)YES ( ) NO
	Inspect the engine fan blades that there is a break is it severely distorted or rusted. As found ;.....			OEM Manual	(✓)YES ( ) NO
	Check condition fan blade and guard cover.			OEM Manual	(✓)YES ( ) NO
	Check engine HYD starter drive gear bendix and fly wheel gear teeth condition and record. **Replace if required*			OEM Manual	(✓)YES ( ) NO Bendix Gear: 90 % Fly wheel Gear: 90 %
	Check and inspect condition the Bendix of hydraulic Starter motor.			OEM Manual	(✓)YES ( ) NO
	Lubricate and check engine throttle system.			OEM Manual	(✓)YES ( ) NO
	Determine if the tachometer operates properly: Record Value of Idle & Max Speed (RPMs) Note: Too low Idle (RPMS) will cause excessive worn at winch brake			OEM Manual	
	ENGINE RPM SPECIFIC	IDLE/LOW SPEED	900-1000 RPM	OEM Manual	900 RPM
		MAX SPEED	2200 RPM	OEM Manual	2000 RPM
	Confirm engine oil pressure as per Parameters below and Record Value:			OEM Manual	
	ENGINE OIL PRESSURE SPECIFIC	Minimum	Not lower then 10 PSI	OEM Manual	40 PSI
		Maximum	70 PSI	OEM Manual	60 PSI
	Confirm engine fuel pressure Parameters are correct and Record Value:			OEM Manual	
	ENGINE FUEL PRESSURE SPECIFIC**	Normal	Not lower then 18 PSI	OEM Manual	(✓)YES ( ) NO As found 30 PSI
	Confirm engine temperature Parameters and Record Value:			OEM Manual	
	ENGINE WATER TEMP SPECIFIC	NORMAL	158-195 F	OEM Manual	160 F
	Test engine SAFETY DEVICE- ensure engine kill cable shuts off FUEL supply			API RP 2D	(✓)Function ( ) False
	Test engine SAFETY DEVICE- ensure EMERGENCY KILL CABLE - shuts off AIR supply			API RP 2D	(✓)Function ( ) False
	Test engine SAFETY DEVICE- ensure ENGINE low lube oil - releases OIL PRESSURE to ctivate Alarm Air System ****Note*** Engine oil pressure low alarm at 20 PSI*			Company Spec/Standard	(✓)Function ( ) False
	Test engine SAFETY DEVICE- ensure HIGH TEMP - releases OIL PRESSURE to **activate Alarm Air System**			Company Spec/Standard	(✓)Function ( ) False
	Check and clean up the water separator filter.			OEM Manual	(✓)YES ( ) NO
	Check the general conditionand functioning of turbocharger. Note;			OEM Manual	( )Leak (✓)Not Leak
	Change fuel filter and inspect the primary hand pump.			OEM Manual	(✓)YES ( ) NO
	Check water temperator regulator.(Thermostat). Change if require refer from cooling temperature.			OEM Manual	(✓)YES ( ) NO
	Change corrosion resistor(water filter)			OEM Manual	(✓)YES ( ) NO
	Check or adjust the engine valve lash. (Intake vale = 0.012", Exhaust valve =0.022 ")			OEM Manual	(✓)YES ( ) NO ( )N/A
	Check condition wear of pump drive spline and record ***Note; Remaining 70% of Original Spline Surface must be replace.*			Company Spec/Standard	90 % Remaining
	Check condition wear of adaptor Coulping spline shaft and record ***Note; Remaining 70% of Original adaptor Coulping spline shaft Surface must be replace.*			Company Spec/Standard	90 % Remaining
	Check condition wear of Coulping spline and record. Re-tigthen of all lock bolts. ***Note; Remaining 70% of Original adaptor Coulping spline shaft Surface must be replace.*			Company Spec/Standard	90 % Remaining
Hydraulic Start System (Apply for C2-Remote P/F Only)	**Check pressure system** at the pressure gauge which should reach 3,000 PSI as standard when the system is FULLY charged. Record Value. (As the system cools down, the pressure should drop slightly and finally stabilised.)			OEM Manual	(✓)YES ( ) NO
	Visually inspect all hydraulic connections and hoses for leaks and retighten if necessary. (Caution: This should NOT be done if the system is under pressure.) 1. Slowly release system pressure by loosening the bleed screw on top of the hand pump. 2. Ensure no pressure remains, retighten the suspected leak fitting or replace the damaged hose or component. 3. Retighten the bleed screw on the hand pump. 4. Pump the system up to 2200 - 2600 PSI 5. Inspect that the leak was eliminated.			OEM Manual	(✓)YES ( ) NO
	Function check Accumulator Pre-charge. (Caution: This should NOT be done if the system is under pressure.) 1. Shut the engine off, release system pressure via the bleed screw on top of the hand pump 2. Retighten bleed screw and actuate the hand pump. The pressure will rapidly increase and then stabilised. This pressure is related to accumulator gas pre-charge pressure. 4. If the pressure rapidly increase to 3000 PSI, it indicates that the accumulator has lost its gas charge. 5. Troubleshoot as necessary			OEM Manual	(✓)YES ( ) NO
	Check function rechaging system by function boom down while the engine running. 1. The crane engine is running at 1,000-1500 RPM. 2. Slowly control lever boom function down for charging pressure to accumulator. 3. This pressure should read on prssure gauge between 2200 - 2600 PSI depending on the recharge ratio 80% std. (90% optional). Record Pressure Value.			OEM Manual	2500 PSI
	Check Nitrogen pressure in Accumulator ***Note**spec @ 1,500 psi as follow schematic and if found pressure loss below 1400 PSI then prepare recharge nitrogen in system			OEM Manual	1500 PSI
	Every 36 months or 2000 engine running hours (approximately 1500 starts) replace the high pressure filter.			OEM Manual	(✓)YES ( ) NO
Pneumatic System	Check for noisy compressor operation, which could indicate a worn drive gear coupling, a loose pulley or excessive internal wear			OEM Manual	(✓)YES ( ) NO
	Check Air Compressor external oil supply and return lines, if applicable, for kinks, bends, or restrictionsto flow			OEM Manual	(✓)YES ( ) NO
	Inspect the Air compressor discharge port, inlet cavity and discharge line for evidence of restrictions and carboning. (if excessive buildup is noted)			OEM Manual	(✓)YES ( ) NO
	Check all hose connections are sound and all mounting and pivoting connections are secure.			OEM Manual	(✓)YES ( ) NO
	Check condition / Clean and lubricate unloading valve			OEM Manual	(✓)YES ( ) NO
	Check proper air pressure is available for the system. Record Value.			OEM Manual	
	AIR SYSTEM PARAMETERS:-	MAX 60 PSI		OEM Manual	60 PSI
	Visually inspection condition of air receiver for signs of corrosion or loose of structural integrity.			Industry Standard	(✓)YES ( ) NO
	Check the hose, piping and tubing for mechanical damage, corrosion, splits, blisters, cracking or excessive abrasion on the outer surface			Industry Standard	(✓)YES ( ) NO
	Drain off air filter and reciever to remove condensed water. If water is present, drain until water is removed.			Industry Standard	(✓)YES ( ) NO
	Check proper operation of pop off valve, by manually functioning valve.			Industry Standard	(✓)YES ( ) NO
	Check proper operation of manual latch valve, by manually functioning latch.			Industry Standard	(✓)YES ( ) NO
	Check proper operation of small engine alarm horn.			Industry Standard	(✓)YES ( ) NO

SYSTEM	TASK			Specification	Record/Reading
Hoist / Brakes	Visually check a hoist exhibits erratic operation and/or unusual noise, the hoist must be taken out of service until it is inspected and serviced by a qualified technician. Continued operation of a hoist with a defect in a critical component may lead to loss of load control, property damage, serious injury or death.			OEM Manual	(✓) YES ( ) NO
	Visual exteriors of hoist, frames, drums and flanges for damage, leaks, cracks and wear and repair/replace as required to maintain the structural integrity of the hoist.			OEM Manual	(✓) YES ( ) NO
	Check all hoist mounting pins, bolts or other fasteners and replace or tighten as necessary.			OEM Manual	(✓) YES ( ) NO
	Lubricant level must be maintained between the minimum and maximum levels; midway up sight glass or at bottom of level plug port as equipped and check/clean plug vent. Use only the recommended type of lubricant.			OEM Manual	(✓) YES ( ) NO
	Inspect Brake Valve Opening Pressure test V/V 1-1/4" PD Series : no lower than 550 PSI V/V 1-1/2" CH Series : no lower than 575 PSI	Main		Braden Bulletin 527-Dec,1996	600 PSI
		Aux			600 PSI
	Inspect Brake cylinder opening pressure test. CH/PD Series : 400-450 PSI.	Main		Industry Standard	450 PSI
		Aux			400 PSI
	Measure differancian of static and dynamic brake. CH/PD Series : 150-250 PSI.	Main		Industry Standard	150 PSI
		Aux			200 PSI
	Check for external oil leaks and repair as necessary. This is extremely important due to the accelerated wear that will result from insufficient lubricating oil in the hoist.			OEM Manual	(✓) YES ( ) NO
	RECORD BOOM CYLINDER INFORMATION :	Boom cylinder Diameter:		OEM Manual	DIA: 12 Inch
		CY Number:		OEM Manual	L= 8108-14 R= 8108-15
		Serial Number:		OEM Manual	L= 9528 R= 9527
	RECORD MAIN HOIST INFORMATION :	Manufacturer:		OEM Manual	Braden
		Model:		OEM Manual	CM175A-23040-02-1
		Serial Number:		OEM Manual	0900986
	Check MAIN HOIST for proper operation and good condition			API RP 2D	(✓) YES ( ) NO
	Brake test & record pressure of MAIN HOIST.			OEM Manual	( ) YES ( ) NO As found Good
	Change main hoist gear oil and inspect for small particles in the old oil. ** Refer to Onsite Gear Oil Sample Procedure ** ** Replace and send oil sample to SKL if abnormal ** ** Take photo of Oil Sampling for Reference**			OEM Manual	(✓) YES ( ) NO As found Good
	RECORD AUXILIARY HOIST INFORMATION :	Manufacturer:		OEM Manual	Braden
		Model:		OEM Manual	PD12C-29044-04-1
		Serial Number:		OEM Manual	~~1055339~~ 1055359
	Check AUXILIARY HOIST for proper operation and good condition			API RP 2D	(✓) YES ( ) NO
	Brake test & record pressure of AUXILIARY HOIST			API RP 2D	(✓) YES ( ) NO
	Change Aux. hoist gear oil and inspect for small particles in the old oil. ** Refer to Onsite Gear Oil Sample Procedure ** ** Replace and send oil sample to SKL if abnormal ** ** Take photo of Oil Sampling for Reference** Please record if any abnormal condition. Note.			OEM Manual	(✓) SEND SKL LAB ( ) NOT SEND SKL LAB
	Check pressre relief Valve: Determine hoistes' relief valve pressure gauge is working and giving accurate measurement by notice whether pressure gauge is vibrating or not. If not, set relief valve pressure in accordance with the schematic and parameters below. Record all readings.			OEM Manual	(✓) YES ( ) NO
	BOOM RELIEF VALVE TEST	Relief Specific:	3,000 PSI	OEM Manual	3000 PSI
	MAIN HOIST RELIEF VALVE TEST	Relief Specific:	3,250 PSI	OEM Manual	3200 PSI
	AUX HOIST RELIEF VALVE TEST	Relief Specific:	2,950 PSI	OEM Manual	2900 PSI
	SWING RELIEF VALVE TEST	Relief Specific:	1,500 PSI	OEM Manual	1500 PSI
	Measure Pressure of hoist motor case drains and Record Value Reference Bulletin: BRADEN Inspection, Testing, Preventive Maintenance and Special Operating Instructions For Planetary Hoists PB-308 latest edition for further details.			OEM Manual	
	MAIN HOIST CASE DRAIN for Gear Motor (Down Mode).	PRESSURE	< 100 psi	Company Spec/Standard	15 PSI
	AUX. HOIST CASE DRAIN for Gear Motor (Down Mode).	PRESSURE	< 100 psi	Company Spec/Standard	28 PSI
Hydraulic System	Check hydraulic tank oil level. Oil should be visible in the sight glass. Top up as required (3/4 Tank Minimum)			OEM Manual	(✓) YES ( ) NO
	Check hydraulic oil condition. (Check if running hours are more than 100 hours from last oil change or during Annual inspection) ** Refer to Onsite Hydraulic Oil Sample Procedure ** ** Replace and send oil sample to SKL if abnormal ** ** Take photo of Oil Sampling for Reference**		Rando HD-68	Company Spec/Standard	( ) SEND SKL LAB (✓) NOT SEND SKL LAB
	Inspect hydraulic tank and strainer filter. Change hydraulic oil. If required with lab confirmation.			Company Spec/Standard	(✓) YES ( ) NO
Hydraulic System	Drain off 1 liter of oil to remove condensed water. If water is present, drain until water is removed and top up with clean oil			Industry Standard	(✓) YES ( ) NO
	Check for any hydraulic leaks			Industry Standard	(✓) YES ( ) NO
	Check the hydraulic hose, piping and tubing for mechanical damage, corrosion, splits, blisters, cracking or excessive abrasion on the outer surface			API RP 2D	(✓) YES ( ) NO
	Check that all hydraulic hose connections are sound and that all mounting and pivoting connections are secure.			Industry Standard	(✓) YES ( ) NO
	Lubricate hydraulic swivel in pedestal and insure tie down restrains are in place and preventing the swivel from rotating with the crane structure.			OEM Manual	(✓) YES ( ) NO
	Ensure the filter breather on tank is not covered or clogged			Industry Standard	(✓) YES ( ) NO
	Visually inspect for missing or loose pins, pin keepers, bolts, nuts, fasteners on all pumps, motors and valves			API RP 2D	(✓) YES ( ) NO
	* Re-tighten the stud bolt of hydraulic main pump and marking the nut for checking to prevent loosening. Note : Torqe spec model P76, P75, PGP/PGM350 ,PGP/PGM330 = 200 ft-lbs. , for model PGP/PGM315 = 140 ft-lbs. and PGP/PGM365 = 450 ft-lbs.			The Commercial Intertech manual	(✓) YES ( ) NO
	Check the filter bypass indicator, while engine is running			OEM Manual	(✓) YES ( ) NO
	With engine running (after all other items pass inspection), check the system for leaks around fittings, hoses, valves and reservoirs			Industry Standard	(✓) YES ( ) NO
	With engine running, check the source of any unusual noise or vibration that may cause or indicate equipment damage or wear			Industry Standard	(✓) YES ( ) NO
	Ensure all hoses are properly rated for the system, see "Parameters" for each system for details.			Industry Standard	(✓) YES ( ) NO
	Record hydraulic oil operating temperture. Note: Hydraulic fluid overheating temperature is over 180 F degrees or 82 C, degrees (reservoir temperature)			Industry Standard	130 Degree F

SYSTEM	TASK				Specification	Record/Reading
	Determine if hydraulic return pressure gauge is working and giving accurate measurements. Record readings					
	RECORD HYDRAULIC RETURN PRESSURE PARAMETERS:			60 PSI "maximum"	OEM Manual	18 PSI
	Check and inspect the hydraulic return filters and seals.				OEM Manual	(✓) YES ( ) NO
	Function Testing and record pressures with engine at :			2,200 RPM	API RP 2D	
	BOOM FUNCTION TEST (Need Crane Mech to verify each platform)				OEM Manual	
	Boom Angle : 60 Degree (Recommend or as applicable)	UP	Cracking pressure	RECORD	OEM Manual	600 PSI
			Full Speed Pressure	RECORD	OEM Manual	800 PSI
		DOWN	Cracking pressure	RECORD	OEM Manual	800 PSI
			Full Speed Pressure	RECORD	OEM Manual	1100 PSI
	MAIN HOIST FUNCTION TEST (Need Crane Mech to verify each platform)				OEM Manual	
	Boom Angle : 60 Degree (Recommend or as applicable)	UP	Cracking pressure	RECORD	OEM Manual	180 PSI
			Full Speed Pressure	RECORD	OEM Manual	500 PSI
		DOWN	Cracking pressure	RECORD	OEM Manual	600 PSI
			Full Speed Pressure	RECORD	OEM Manual	1200 PSI
	AUX HOIST FUNCTION TEST (Need Crane Mech to verify each platform)				OEM Manual	
	Boom Angle : 60 Degree (Recommend or as applicable)	UP	Cracking pressure	RECORD	OEM Manual	100 PSI
			Full Speed Pressure	RECORD	OEM Manual	400 PSI
		DOWN	Cracking pressure	RECORD	OEM Manual	650 PSI
			Full Speed Pressure	RECORD	OEM Manual	1500 PSI
	SWING FUNCTION TEST (Need Crane Mech to verify each platform)				OEM Manual	
	Boom Angle : 60 Degree (Recommend or as applicable)	LEFT	Cracking pressure	RECORD	OEM Manual	200 PSI
			Full Speed Pressure	RECORD	OEM Manual	600 PSI
		RIGHT	Cracking pressure	RECORD	OEM Manual	200 PSI
			Full Speed Pressure	RECORD	OEM Manual	600 PSI
Electrical system, Crane Boom Lighting and red obstruction light	Check the electrical junction boxes, wires and connections for deterioration, desiccant bags, (replace as required)				Industry Standard	(✓) YES ( ) NO
	Check the condition of the grounding and lighting protection system.				Company Spec/Standard	(✓) YES ( ) NO
	Visually inspect boom floodlight and light guards for loose, missing, corroded				Company Spec/Standard	(✓) YES ( ) NO
	Check condition pipe support , U-bolt ,nuts of boom floodlight and Electric slipring for loose , missing , corroded				Company Spec/Standard	(✓) YES ( ) NO
	Check Electric slipring/swivel for 360° continuous rotation				OEM Munnal	(✓) YES ( ) NO
	Check Water ingress, condensation in electric slipring, red obstruction light and boom floodlight				OEM Munnal	(✓) YES ( ) NO
	Check feely movement and lubricate of boom floodlight				OEM Munnal	(✓) YES ( ) NO
	With generator in operation, intergize all lights to unsure proper function.				API RP 2D	(✓) YES ( ) NO
	Check condition of crane boom lighting and safety net is secured with strong point. * **Safety net should be replace 24 months after installation (2 year)***			Last installation date _____	Company Spec/Standard	(✓) YES ( ) NO
	Check function of crane sound signal				Company Spec/Standard	(✓) YES ( ) NO ( ) N/A
	Check function of crane boom lighting at boom upper section				Company Spec/Standard	(✓) YES ( ) NO ( ) N/A
	Check function of crane boom lighting at boom lower section				Company Spec/Standard	(✓) YES ( ) NO ( ) N/A
	Check function of crane boom lighting at winch skid				Company Spec/Standard	(✓) YES ( ) NO ( ) N/A
	Check function of crane boom lighting at crane cabin				Company Spec/Standard	(✓) YES ( ) NO ( ) N/A
	Check function becon light at boom tip				Company Spec/Standard	(✓) YES ( ) NO ( ) N/A
	Inspection wire rope guide & Roller assembly				Company Spec/Standard	(✓) YES ( ) NO
	Visually inspect red obstruction light pipe support, u-bolts, nuts connection to hand rail for loose, missing, corroded				Company Spec/Standard	(✓) YES ( ) NO
	Visually inspect safety sling attached to the red obsruction light and its base for loose, missing, corroded				Company Spec/Standard	(✓) YES ( ) NO
	Visually inspect red obstruction light function. The light is designed to turn on all the time.				Company Spec/Standard	(✓) YES ( ) NO
Operator Control Station	Check general condition of control panel, bolts, paint security, etc.				API RP 2D	(✓) YES ( ) NO
	Determine if there is a serviceable fire extinguisher in the vicinity of the crane				Company Spec/Standard	(✓) YES ( ) NO
	Determine if correct load chart is in use and easily visible for operator				API RP 2D	(✓) YES ( ) NO
	Determine if charts, indicators and hand signal chart are in the cabling and firmly attached				API RP 2D	(✓) YES ( ) NO
	Determine if angle/radius indicator plate is easily visible to operator and is moving freely.				API RP 2D	(✓) YES ( ) NO
	Check condition of control levers and determine if they "dead-man" back to the neutral position.				API RP 2D	(✓) YES ( ) NO
	Check condition of pressure gauges.				API RP 2D	(✓) YES ( ) NO
	Check proper control labels are firmly installed, completely legible and properly labeled				API RP 2D	(✓) YES ( ) NO
	Check controls for freedom-of-movement				OEM Manual	(✓) YES ( ) NO
	Check condition , Leak, freely moement of Dynamic swing break system *** Note; If HYD Oil loose in CYD reservoir must be refill*				OEM Manual	(✓) YES ( ) NO
	Check condition , Leak, freely moement of Accelerate System *** Note; If HYD Oil loose in CYD reservoir must be refill*				API RP 2D	(✓) YES ( ) NO ( ) N/A
	Check all safety glass and rubber seal for proper condition				Industry Standard	(✓) YES ( ) NO ( ) N/A
	Function Test Horn. Note;.....				Company Standard	(✓) YES ( ) NO ( ) N/A
	Ensure PRE/POST Check List and Pocket Manual in the cabin. Note;.....				OEM Manual	(✓) YES ( ) NO
Load Indicator System	Visual check on fittings and connections for leaks. Fix leak if any. Note:.....				OEM Manual	(✓) YES ( ) NO
	Should any leaks exist, stop leak and recharge system, refer to maintenance manual				OEM Manual	(✓) YES ( ) NO
	Change and flushing Load cell fluid.				Industry Standard	(✓) YES ( ) NO
	Check general condition of tubbing, hoses, pins bolts, paint, etc.					

SYSTEM	TASK	Specification	Record/Reading
	Insure load cell is free of obstructions	OEM Manual	(✓)YES ( ) NO
	Check condition of gauge(s) face and clean glass as required.	OEM Manual	(✓)YES ( ) NO
	Check the scale's operation and weighing accuracy. (Main Hoist) Remark: Maximum variance +/- 2% Note;.....	Company Spec/Standard	(✓)YES ( ) NO ( ) N/A
	Check the scale's operation and weighing accuracy. (Aux. Hoist) Remark: Maximum variance +/- 2% Note;.....	Company Spec/Standard	(✓)YES ( ) NO ( ) N/A
	Check the internal casting fluid of weight indicator. top up if required	Industry Standard	(✓)YES ( ) NO ( ) N/A
	Insure SWL tag matches ratings on the Crane Load Chart.	OEM Manual	(✓)YES ( ) NO ( ) N/A
	Insure Boom Length, matches the Crane Load Chart	OEM Manual	(✓)YES ( ) NO ( ) N/A
	Insure Boom Angle measurements and readings match the boom angle indicator.	OEM Manual	(✓)YES ( ) NO ( ) N/A
	Insure Boom Radius measurements indicate the distance from center line of the crane to the hook	OEM Manual	(✓)YES ( ) NO ( ) N/A
	Check Main load cell gap 1/4 (0.250) inch	OEM Manual	(✓)YES ( ) NO ( ) N/A
	Check Aux load cell gap 3/8(0.380) inch (Compression Load Cell Type)	OEM Manual	(✓)YES ( ) NO ( ) N/A
Pedestal & Structure	Visually check **Pedestal** for chipped/cracked paint, deformation, worn parts, dents, corroded areas, cracks weld, etc.	API RP 2D	(✓)YES ( ) NO
	Check water rain drain at pedestal must be not obstuct	Industry Standard	(✓)YES ( ) NO
	Check pin and cotter pin of pedestal missing, corrosion, wear, damage and exercise pin.	Industry Standard	(✓)YES ( ) NO
	Visually check **Base - Plate connection and Base hoist Structure** for chipped/cracked paint, deformation, worn parts, dents, corroded areas, cracks weld, etc.	API RP 2D	(✓)YES ( ) NO
	Check A fixed such as Handrial, Walkway, Grating, stationary structure without significant movement in response to waves and currents in normal operating conditions.	API RP 2C	(✓)YES ( ) NO
	Visually check and lubricate maintenance jib. ***Note*** If on pedestal crane	OEM Manual	(✓)YES ( ) NO ( ) N/A
	Check maintenance jib is secure firmly. ***Note*** If on pedestal crane	OEM Manual	(✓)YES ( ) NO ( ) N/A
Box Boom & Luffing CYD	Check and Verify entire box boom and Boom CYD for loss of protective coating and corrosion. Note;.....	API RP 2D	(✓)YES ( ) NO
	Check and Verify entire box boom and Boom CYD for chipped/cracked paint, deformation, worn parts, dents, corroded areas, cracks, etc. Note;.....	API RP 2D	(✓)YES ( ) NO
	Check and Verify boom end connections, for bends, dents, corroded areas, cracked welds, and signs of mechanical damage, wear, etc. **any deviation should be reported**	API RP 2D	(✓)YES ( ) NO
	Check and Verify boom rest and wooden support to ensure it's in good condition	API RP 2D	(✓)YES ( ) NO
	Inspect pin and pin holes of Upper tank and Lower tank for excessive clearance	OEM Manual	(✓)YES ( ) NO
	BOOM CYLINDER PIN MAXIMUM TOLERANCE — 0.125 inch (3mm)	Industry Standard	As found 0.100
	Check BOOM CYLINDERS for proper operation and good condition	API RP 2D	(✓)YES ( ) NO
	Check Boom cylinder barrels and rods for leaks, mechanical damage and corrosion	Industry Standard	(✓)YES ( ) NO
	Check and measurement boom foot pin and connection pins for clearance	Industry Standard	(✓)YES ( ) NO
	BOOM FOOT PINS & BOOM BOX CONNECTER PIN TOLERANCE — 0.125 inch (3mm)	Industry Standard	
	Boom Foot Pin Tolerance	Industry Standard	~~0.08~~ 0.078 inch
	Boom Box Connecter Pin Tolerance	Industry Standard	~~0.05~~ inch 0.018
	Check connecting bolts of box boom loose, corrosion, wear, damage	OEM Manual	(✓)YES ( ) NO
	Lubricate boom foot pins and bushings	OEM Manual	(✓)YES ( ) NO
	Lubricate boom cylinder pins, bearings and bushings	OEM Manual	(✓)YES ( ) NO
	Boom function test angle/radius to correction **Note; The cylinder(s) mechanism shall be capable of elevating the boom from a minimum of zero degrees to the maximum recommended boom angle.	API RP 2C	(✓)YES ( ) NO
	Operation functional test and verify Boom Creeping down **Note ; Test at angle 60 "	Industry Standard	(✓)YES ( ) NO As found Good
Wire Rope	Determine if parts-of-line match parts of line on the load chart in the crane cabin.	API RP 2D	(✓)YES ( ) NO
	Determine if visible portion of wire rope adequately lubricated. If not lubricate wire rope	API RP 2D	(✓)YES ( ) NO
	For each layer of wire rope on drum, check that all rope is parallel and each crossover point at hoist flanges is correct	API RP 2D	(✓)YES ( ) NO
	The top layer of rope must not be lower to the flange tips 2.5 in for Smooth drum,2 in for groove drum or 2.5 times of wire rope diameter	API RP 2C	(✓)YES ( ) NO
	Inspect wire rope for, kinking, crushing, broken wires, necking down of rope diameter, Worn outside wires, corroded or broken wires at end connection, cutting or unstringing.	API RP 2D	(✓)YES ( ) NO As found Good
	NoteRunning Ropes of rotation-resistant construction used in the main or auxiliary Hoist: -Four (4) Randomly distributed broken wires within 30 rope diameter -Two (2) broken wires in one stand within 6 rope diameter	API RP2D Edition 7	(✓)YES ( ) NO As found Good
	One valley break can indicate internal rope damage requiring close inspection of this section of the rope. When one or more valley breaks are found in one lay length the rope should be retired.	API RP2D Edition 7	(✓)YES ( ) NO As found Good
	Reductions for the rope diameter, from initial wire rope dimensional measurements, in a nonworking area (an area away from the sheaves) compared to the lowest diameter of rope measured in three working areas (areas where the rope regularly goes over a sheave) of more than the following is observed: —3/64 in. (0.047 in.) (1.2 mm) for diameters up to and including 3/4 in. (19.1 mm); —1/16 in. (0.062 in.) (1.6 mm) for diameters of 7/8 in. to 1-1/8 in. (22.2 mm to 28.6 mm); —3/32 in. (0.093 in.) (0.8 mm) for diameter of 1-1/4 in. to 1-1/2 in. (31.8 mm to 38.1 mm); —For rope diameters greater than 1-1/2 in., a 5 % diameter loss from baseline measurement. —Wear of one-third the original diameter of the outside individual wires.	API RP2D Edition 7	(✓)YES ( ) NO As found dimension Good
	Increase in the length of an individual rope lay is observed. This increase in lay length and accompanying reduction in diameter can be caused by failure of the core. This can occur more readily in ropes or rotation-resistant construction.	API RP2D Edition 7	(✓)YES ( ) NO As found Good
	-Inspection and Verify running and standing rope from heat effect **Note; Not more than 250°C -There is evidence of heat damage from any source (i.e. engine exhaust, flare towers, stress corrosion cracking, etc.). Heat can be generated by passing a rope over a frozen or non-turning sheave, contact with structural members of the crane, improperly grounded welding leads or lightning strikes	Industry Standard	(✓)YES ( ) NO As found Good
	With the boom at the highest possible angle and the main load block or overhaul ball at the water level, ensure there is a minimum of 5 wraps of wire-rope remaining on the drums. Note: (Thai law, requires minimum of 2 wraps)	API SPEC 2C / Thai Law	(✓)YES ( ) NO
	Reference: - Running rope safety factor not less than 6 for wire rope that are running wire, (Thai law; Wire rope nominal breaking strength x number parts of line / Design factor 6) - Standing rope safety factor not less than 3.5 for wire rope that are stay cables, (Thai law)	Thai Law	(✓)YES ( ) NO ( ) N/A
	Measure and record nominal diameter of "running ropes" main and auxiliary (particularly on drum, equalizer sheave and at sockets, clips and dead end points) *****Nominal = several measurements added together divided by Number of measurements*****	API RP 2D	(✓)YES ( ) NO
	Inspect wire rope and record dimension.	API RP 2D	

SYSTEM	TASK		Specification	Record/Reading
	MAIN WIRE ROPE OD:	FULL DRUM	OEM Manual	0.640 inch
		HALF DRUM	OEM Manual	0.640 inch
		WATER LEVEL	OEM Manual	0.640 inch
	AUX WIRE ROPE OD:	FULL DRUM	OEM Manual	0.652 inch
		HALF DRUM	OEM Manual	0.640 inch
		WATER LEVEL	OEM Manual	0.640 inch
	Slip-Cut 1 meter of all ropes at the wedge socket and re-wedge to prevent rust inside of wedge socket (at outward end of rope, not on hoist drum) Dead end tail length is never less than 6 inches, or: - Standard 6 to 8 Strand wire rope is not less than 7 times the rope diameter - Rotation Resistant Wire Rope is not less than 20 times the rope diameter		Company Spec/Standard	(✓) YES ( ) NO
	U-bolt and Fist Grip Clips: Extreme care should be exercised to assure proper orientation of U-bolt clips. The U-bolt segment shall be in contact with the wire rope dead-end. The orientation, spacing, torquing, and number of all clips shall be in accordance with the crane manufacture's specifications.		API SPEC 2C	(✓) YES ( ) NO
	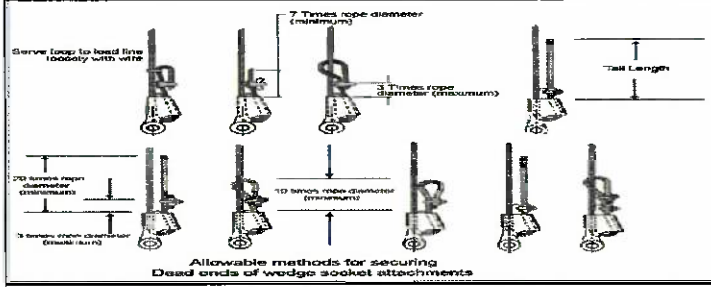 Allowable methods for securing Dead ends of wedge socket attachments	API SPEC 2C	Model ans Size wedge socket. Main hoist. Model..... Size.....5/8..... Aux.Hoist. Model..... Size.....5/8.....
	Verify that the wedge socket and wedge are the correct size for the rope in use and record the size		API SPEC 2C	(✓) YES ( ) NO
Sheaves & Bearings	Lubricate all sheave bearings.		API RP 2D	(✓) YES ( ) NO
	Visually inspect all sheaves and bushings for cracks, wear and deterioration		API RP 2D	(✓) YES ( ) NO As found.....Good.....
	Visually inspect wire rope track of sheave for rope imprints, wear and deterioration. If damage exist sheave should be resurfaced or replaced.		API RP 2D	( ) YES ( ) NO As found.....Good.....
	Pins retained by snap rings, bolt lock shafts, plates lock should be checked for missing or loose for all		API RP 2D	(✓) YES ( ) NO
	Check wirerope guards and keepers for proper location and condition.		API RP 2D	(✓) YES ( ) NO
	Determine if wire rope is jumping the sheaves, by looking for signs of damage on the sheave brim		Industry Standard	(✓) YES ( ) NO
	Sheave Rope Profile for optimum Rope life the sheave groove profile should be correctly matched to the rope diameter		Industry Standard	(✓) YES ( ) NO
	Check rope sheave should be machine grooved to adepth of not less than 1.5 times the norminal diameter of the rope		Industry Standard	(✓) YES ( ) NO
	MAIN POINT SHEAVES: Note;.....		Industry Standard	No.1 (✓) YES ( ) NO No.2 (✓) YES ( ) NO
	AUX SHEAVES: Note;.....		Industry Standard	No.1 (✓) YES ( ) NO
	IDLER SHEAVES: Note;.....		Industry Standard	AUX. (✓) YES ( ) NO Main (✓) YES ( ) NO
	Pins for bronze bushing and straight roller bearing should have a running clearnace of .031 inch/ sheave of end play and should be adjusted accordingly.(count from left)		Industry Standard	(✓) YES ( ) NO
	MAIN POINT SHEAVES:		Industry Standard	Sheave No.1.....18..... inch Sheave No.2.....18..... inch
	AUX SHEAVES:		Industry Standard	Sheave No.1.....18..... inch
	IDLER SHEAVES:		Industry Standard	Sheave AUX.....18..... inch. Sheave Main.....18..... inch.
	Ensure the sheaves are aligned and the fleet angle is correct **Remark; Wire rope User's Manual allows 2 degree on grooved winch drum, Smooth Drum shuold be not more than 1-1/2 degree		API RP 2D	(✓) YES ( ) NO
	Determine if wire rope size and sheave sizes/grooves are compatible and record size. Sheave pitch diameter (D) to nominal wire rope diameter (d) ratio (D/d) shall not be less than 18:1		API SPEC 2C	(✓) YES ( ) NO
	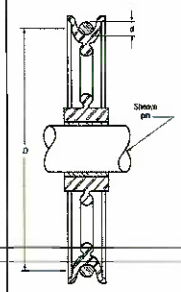	MAIN POINT SHEAVES: SHEAVE D / WIRE ROPE d = >18	API SPEC 2C	18 inch (D) 5/8 inch (d) 28.8 (Ratio D/d)
		AUX SHEAVES: SHEAVE D / WIRE ROPE d = >18	API SPEC 2C	18 inch (D) 5/8 inch (d) 28.8 (Ratio D/d)
		IDLER SHEAVES: SHEAVE D / WIRE ROPE d = > 18 (if applicable)	API SPEC 2C	18 inch (D) 5/8 inch (d) 28.8 (Ratio D/d)
		~~MAIN BLOCK SHEAVES:~~ ~~SHEAVE D / WIRE ROPE d = > 18~~	~~API SPEC 2C~~	~~18 inch (D)~~ ~~5/8 inch (d)~~ ~~28.8 (Ratio D/d)~~
Load Block	Load Block: Check the load block for cleanliness, binding sheaves, damaged or worn sheaves, worn or distorted sheave pins, broken bolts, and worn cheek weights. Note ;.....		Industry Standard	(✓) YES ( ) NO As found.....Good.....

SYSTEM	TASK	Specification	Record/Reading
	Hook: Check the hook damage, excessive wear to the hook safety latch, hook swivel trunnions, thrust collar, securing, damage or missing lubrication fittings, proper lubrication, cracks and gouges, and if visibly bent or twisted or has been exposed to welding or arching. Note ;.....	Industry Standard	(✓) YES ( ) NO As found Good
	Hook: Tip has been bent more than 10 degree out of plane from the hook body	Industry Standard/API RP2D7	(✓) YES ( ) NO As found Good
	Inspect the Pins for bronze bushing and straight roller bearing should have a running clearnace of .031 inch/ sheave of end play and should be adjusted accordingly	Industry Standard	(✓) YES ( ) NO
	Inspect Hook or shackle to swivel case clearance is set at .031 to .062 inch, Clearance exceeding .12 to .18 (ONLY CROSBY BRAND)	OEM Crosby	(✓) YES ( ) NO
	OEM STANDARD RECOMMEND that Crane block removal from service untill replaced and repair following below	**OEM STANDARD**	
	- Elongated center pin and hook trunnion holes exceeding 5% of Original diameter	OEM STANDARD	(✓) YES ( ) NO As found Good
	-Material loss due to wear exceeding 10% of original section	OEM STANDARD	(✓) YES ( ) NO As found Good
	-Sheave wire rop groove diameter smaller than 2.5%	OEM STANDARD	(✓) YES ( ) NO As found Good
	Loosened tie bolts nuts, center pin round nuts, check weight cap screws and hook nut cap screws. Tie bolt nuts to be torqued to 35-40 ft.Lbs and restaked, all other fasteners wrench tight	**OEM STANDARD**	(✓) YES ( ) NO
	Throat opening - any distortion causeing an increase in throat opening of 5% not ot exceed 1/4 in. (6 mm.)(or as recommended by the manufacturer)	**ASME B30.10**	(✓) YES ( ) NO
	Inspect rope track worn in sheave groove, sheave must be resurface or replace	API RP 2D	(✓) YES ( ) NO
	Ensure the load block is not using "Cast Iron" check weights they can not be used as per API	API SPEC 2C	(✓) YES ( ) NO As found Good
	Determine if all hooks are equipped with properly operating safety latches and check for proper functioning	API RP 2D	(✓) YES ( ) NO
	Lubricate sheave bearings and swivels	OEM Manual	(✓) YES ( ) NO
	Re-thighten nut firmly to point at which trunion will just rotate, the Re-tighten set-screw in nut and thread condition as in the picture below.	Industry Standard	(✓) YES ( ) NO
	Last NDE inspection record	Industry Standard	Last inspect date_____
	RECORD LOAD BLOCK INFORMATION : Manufacturer:	OEM Manual	Mclissch.
	Model:	OEM Manual	MB
	Serial Number:	OEM Manual	01155645
	Record Load block measurements and details for future comparison with historical data ☒	Industry Standard	(✓) YES ( ) NO
	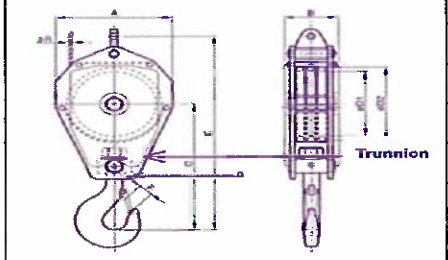 A - Block OD	Industry Standard	17.5 mm/ inch
	B - Block length	Industry Standard	12.5 mm/ inch
	C - Center of Pin to hook Saddle	Industry Standard	28 mm/ inch
	D1 - Sheave Diameter	Industry Standard	14 mm/ inch
	E - Block Width	Industry Standard	34 mm/ inch
	F - Throat Opening	Industry Standard	6.5 mm/ inch
	G - Trunnion	Industry Standard	0.038 mm/ inch
Aux. Ball	**Inspect Auxiliary ball for cleanliness, binding swivel, work pad-eye hole. Inspect the hook damage, excessive wear to the hook safety latch, Bent connector plates,Severe corrosion pitting, hook swivel trunnions, thrust collar, securing, damage or missing lubrication fittings,Loose, missing or damaged retaining nuts, cotter pins or swivel set screws ,Missing or illegible rating and warning tags, proper lubrication, cracks and gouges, and if visibly bent or twisted or has been exposed to welding or arching.**	Industry Standard	(✓) YES ( ) NO
	Hook: Tip has been bent more than 10 degree out of plane from the hook body	Industry Standard/**API RP2D7**	(✓) YES ( ) NO
	OEM STANDARD recommend that Crane overhaul ball removal from service untill replaced and repair following below	**OEM STANDARD**	
	- Elongated ball pin holes, hook latch pin holes and swivel eye exceeding 5% of original diameter,	OEM STANDARD	(✓) YES ( ) NO As found Good
	-Swivel end play gap exceeding .08". Excessive end play indicates damaged internal set screw	OEM STANDARD	(✓) YES ( ) NO As found Good
	-Material loss due to wear exceeding 10% of original section	OEM STANDARD	(✓) YES ( ) NO As found Good
	Throat opening - any distortion causeing an increase in throat opening of 5% not ot exceed 1/4 in. (6 mm.)(or as recommended by the manufacturer)	**ASME B30.10**	(✓) YES ( ) NO
	All hooks that lift personnel are to have a positive locking safety latch ****locking Pin to be used while lifting personnel****	API RP 2D	(✓) YES ( ) NO
	***** Temperature Effected : When hooks are to be used at temperature above 400° F. (204°C) or below -40°F (-40°C), the hook manufacturer or a qualified person should be consulted** ***** Chemically Active Environment : The strength of hooks can be affected by chemically active environments, such as caustic or acid substances or fumes. The hook manufacturer or qualified person should be consulted before hooks are used in chemically active environment**	**ASME B30.10**	
	Verify to ensure nut firmly at which trunion rotate. Identify to set-screw in nut/ swivel/ counter pin and thread condition.	Industry Standard	(✓) YES ( ) NO
	Last NDE inspection record	Industry Standard	Last inspect date_____
	RECORD AUX BALL INFORMATION : Manufacturer:	OEM Manual	Mclissich.
	Model:	OEM Manual	MB 07T200E
	Serial Number:	OEM Manual	01048920
	Record Auxiliary Ball measurements and details for future comparison with historical data: For Model MB07T200E ONLY	Industry Standard	
	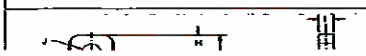 AA Dimensions 3.0 Inch	Industry Standard	3.0 mm/ inch

SYSTEM	TASK		Specification	Record/Reading
	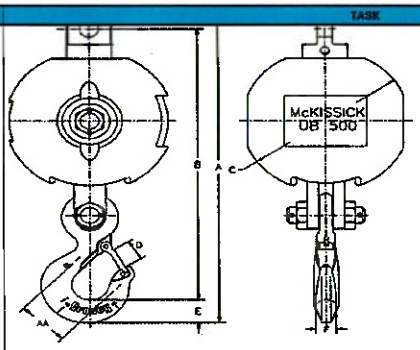	A Dimensions 24.89 Inch	Industry Standard	24.8 mm/ Inch
		B Dimensions 21.71 Inch	Industry Standard	21.7 mm/ Inch
		C Dimensions 12.50 Inch	Industry Standard	12.5 mm/ Inch
		D Dimensions 1.61 Inch	Industry Standard	1.6 mm/ Inch
		E Dimensions 1.81 Inch	Industry Standard	1.8 mm/ Inch
		F Dimensions 1.38 Inch	Industry Standard	1.38 mm/ Inch
		H Dimensions 1.38 Inch	Industry Standard	1.38 mm/ Inch
		I Dimensions 0.88 Inch	Industry Standard	0.88 mm/ Inch
		J Dimensions 1.31 Inch	Industry Standard	1.30 mm/ Inch
Safety system	Check Condition anti - two block , hanging chain ,eye bolts , fix bolts , shackle for missing , corrosion , erosion , deformation		API RP 2D	(✓) YES ( ) NO
	Check anti - two block kick out plate for freely movement		Company Spec/Standard	(✓) YES ( ) NO
	Check anti-2-block device proper function of Main winch		Company Spec/Standard	(✓) Function ( ) False
	Check anti-2-block device proper function of Aux. winch		Company Spec/Standard	(✓) Function ( ) False
	Check relation of boom radius and boom angle (lowest, middle, highest) with refrence to load chart. Recharge fluid W-15 to load indicator, if required.		API RP 2D	(✓) YES ( ) NO
	Functional test of emergency lowering system (See procedure in Emergency Load Lowering Box). **Note:** Keep for 1 Yr PM to sustain crane mechanic competency. **Caution:** Function test must be performed on top deck with max 2-foot height.		Company Spec/Standard	(✓) YES ( ) NO ( ) N/A
	Visually check emergency load lowering kit. Ensure EMERGENCY LOWERING PROCEDURE and MATERIAL LIST are in the box. - Ensure ALL items shown on the list are in the box and in good condition - **SECURE THE BOX WITH A TIE WRAP.**		Company Spec/Standard	(✓) YES ( ) NO ( ) N/A
Slew Mechanism	Visually check for damage and excessive wear on gear teeth		OEM Manual	( ) YES ( ) NO
	Visually check slew gear box in the area of oil seal for any leaks		API RP 2D	( ) YES ( ) NO
	RECORD SLEW GEAR BOX INFORMATION :	Manufacturer:	OEM Manual	ESK
		Model:	OEM Manual	250A-D)(4-51
		Serial Number:	OEM Manual	
	CHECK and RE-TORQUE swing drive gearbox mounting bolts at following brands: - ESKRIDGE, Model: 250 = 150 FT-LBS		API RP 2D	(✓) Yes ( ) No
	Check swing gearbox oil level/condition, top up if required	Meropa 220	OEM Manual	(✓) YES ( ) NO
	Monitor slew gearbox oil condition by visually examine for burnt smell, metal particles, and/or other contaminants, record and change if found.	Meropa 220	OEM Manual	(✓) CHANGE OIL ( ) NOT CHANGE OIL
	Change slew gear box oil	Meropa 220	OEM Manual	(✓) CHANGE OIL ( ) NOT CHANGE OIL
	Grease all pivot points of slew ring (bearing)		OEM Manual	(✓) YES ( ) NO
	Grease open gears (pinion)		OEM Manual	(✓) YES ( ) NO
	Rotate crane 360 degree and check smoothness of operation		OEM Manual	(✓) YES ( ) NO
	Check swing drive static parking brake for proper operation Caution: **DO NOT stop the swing of the crane with this static brake (parking brake)**		OEM Manual	(✓) YES ( ) NO
	Check swing drive dynamic parking brake for proper operation		OEM Manual	(✓) YES ( ) NO
	Check swing lock mechanism condition; corrosion ,dent , loos all part,worn and wear		OEM Manual	(✓) YES ( ) NO As found condition: Good
	Check swing lock mechanism freely lock and unlock for function. **Check and inspect for hydraulic for leaks on actuator model.**		OEM Manual	(✓) YES ( ) NO As found condition: Good
	Check condition of slew ring bolts e.g. Bolt grade and washers. **Caution:** Use only hardened flat washers under head of bolt. Do not use lock washers, or regular flat washers.		Industry Standard	(✓) YES ( ) NO As found condition: Good
	Monitor ball-ring grease sample. If found wear and tear particles, take sample and send to lab. **Wear assessment by grease sample analysis—wear may be monitored by periodic grease sample analysis as describe in this section. Grease samples should be collected every twelve months as a minimum and the results of the analysis recorded; this period should be shortened if obvious metal or contaminants are present.		API RP 2D	(✓) SEND TO LAB ( ) NOT SEND TO LAB As found: Good
	Verify crane condition and load test as separate procedure. **Table 1—Static/Onboard Test Load and Radius** Static/Onboard Rated Load at a Specific Radius lb (kg) / Test Loads in Excess of Static/Onboard Rated Load at a Specific Radius ≤ 40,000 (18,144) / 25 % > 40,000 ≤ 100,000 (>18,144 ≤ 45,356) / 10,000 lb (4536 kg) > 100,000 (45,356) / 10 %		API 2C	(✓) YES ( ) NO Specific test load: Good lbs.
	Verify crane condition and load test as separate procedure. " Record crane load test in load test form."		Company Standard	(✓) YES ( ) NO

Risk Level Definitions: The following 3 levels indicate the impact the noted deficiency poses to the operation or structural integrity of the equipment:

Level 1 = Incidental	Level #2 = Restricted Operation	Level #3 = Out of Service
Minor deficiency that is recommended to be promptly addressed, but poses no safety and/or environmental risk. The crane can still be operated at full duty.	Deficiency identified that has the potential to limit, de-rate or damage the crane, its surroundings and/or the environment. The duty and locked/ tagged out until the crane's duty and operation should be de-rated or service restricted.	The crane should be removed from duty and locked/ tagged out until the deficiency is rectified.

SYSTEM		TASK		Specification	Record/Reading
System:	Risk Level:	Component:	HYD. HOSE	In Accordance with:	
		Location:	BOOM CYLINDER	Date Originated:	

Description: HYD.HOSE -16X150" / -16X135" DCV BOOM TO LINE DOWN L/R QTY 2 SETS

Recommended Action: NEED TO ORDER PART AND REPLACE

Recommended urgency timeframe for corrective action: | Completed Date: | Completed By:

System:	Risk Level:	Component:	FUEL PRESSURE SENSING VALVE	In Accordance with:	
		Location:	AIR SYSTEM.	Date Originated:	

Description: FUEL PRESSURE SENSING VALVE DAMAGE

Recommended Action: NEED TO ORDER PART

Recommended urgency timeframe for corrective action: | Completed Date: | Completed By:

System:	Risk Level:	Component:		In Accordance with:	
		Location:		Date Originated:	

Description:

Recommended Action:

Recommended urgency timeframe for corrective action: | Completed Date: | Completed By:

System:	Risk Level:	Component:		In Accordance with:	
		Location:		Date Originated:	

Description:

Recommended Action:

Recommended urgency timeframe for corrective action: | Completed Date: | Completed By:

System:	Risk Level:	Component:		In Accordance with:	
		Location:		Date Originated:	

Description:

Recommended Action:

Recommended urgency timeframe for corrective action: | Completed Date: | Completed By:

System:	Risk Level:	Component:		In Accordance with:	
		Location:		Date Originated:	

Description:

Recommended Action:

Recommended urgency timeframe for corrective action: | Completed Date: | Completed By:

16-jul-2025

completed by

[redacted]

THE PEDESTAL CRANE CONDITION VERIFICATION

Date : 16 JUL 2025			
Crane Owner : CTEP/ COTL Field: Benchamas Platform/ Vessel: BEWV			
Crane Owner 's representative : (Mech Supv./ M'Dent) [redacted]			
Qualified inspector : (Qualified Crane Mechanic)			
Inspector 's company / agency : (Third Party or Outsource to witness if applicable)			
Manufacture Nautilus Fabrication by Gt States. Year of Fabrication July 2011 Country USA Model / Serial 180 B1 HD-80 (MS) / 20211 C Standard API Edition SIXTH 2004			Remark
Safe Working Load (SWL) ---> OEM	15.4b Metric Tonnes		
Safe Working Load (SWL) ---> Existing via MOC, if applicable	— Metric Tonnes		
Boom length, Main	80 Ft		
Boom length, Auxiliary if applicable	13 Ft		
Part of line main hoist	4 Part line		
Part of line auxiliary hoist	4 Part line		
Safe Working Load at longest boom radius	80 ft	3.7b Metric Tonnes/ Lbs	
Safe Working Load at shortest boom radius	13 ft	15.4b Metric Tonnes/ Lbs	
The document of crane specification for Testing , Maintenance and Inspection are provided by:	OEM	MOC / Crane Engineer	
Has the crane ever been modified by MOC ? (To verify if this crane is modified with MOC --> Allow to test the crane. If this crane is modifed without MOC --> Not allow to test the crane)	YES	NO	(Employers are not allowed to modify or adjust any part of cranes or dericks or consent to other persons to do these things, that might reduce the safety of the employees who work with the cranes or derricks).
Does the rotating part have proper guard in place?	YES	NO	(Need mitigation plan)
Is the ladder and hand rail in place?	YES	NO	(Need mitigation plan)
Is the maintenance platform in place?	YES	NO	(Need mitigation plan)
Is the SWL tag labelled on crane pedestal, main block or aux ball?	YES	NO	(Need mitigation plan)
Verify if the crane major component damaged or not	YES (Need to repair or mitigate unsafe condition with MOC before testing)	NO	(Employers shall not allow employees work with damaged/ unsafe cranes or derricks)
Inspect boom end connections, for bends, dents, corroded areas, cracked welds, and signs of mechanical damage, wear, etc. **any deviation should be reported** Level 1 = Incidental : Minor deficiency that is recommended to be promptly addressed, but poses no safety and/or environmental risk. The crane can still be operated at full duty. --> Allow to test Level #2 = Restricted Operation: Deficiency identified that has the potential to limit, de-rate or damage the crane, its surroundings and/or the environment. The duty and locked/ tagged out until the crane's duty and operation should be de-rated or service restricted. --> To be derated Level #3 = Out of Service;The crane should be removed from duty and locked/ tagged out until the deficiency is rectified. --> Not Use	YES (To be verified)	NO	
Function Load Testing			
1. Verify Crane SWL (Existing)	3.0 Metric Tonnes		
2. Verify routine maximum actual load.	2.4 Metric Tonnes		
3. Select the specimen load to be more than actual routine load 1.25 times but not more than SWL. Example # 1 : Crane 's SWL is 18 Metric Tonnes. The routine maximum actual load is 2.4 Metric Tonnes. Therefore, the load testing shall be 2.4 x 1.25 = 3 Metric Tonnes. Example # 2 : Crane 's SWL is 18 Metric Tonnes. The routine maximum actual load is 16 Metric Tonnes. By calculation, the load testing is 16 x 1.25 = 20 Metric Tonnes more than SWL (18 MTon). Therefore, the load testing shall be 18 Metric Tonnes equal to SWL.	3.0 Metric Tonnes		
4. Use Auxiliary Winch if specimen load less than or equal 3 Metric Tonne	YES	NO	
5.Use Main Winch if specimen load more than 3 Metric Tonne	YES	NO	
6. The record of load testing : Fill in "Function Test Record" sheet attached.			

RECORDED FUNCTION TEST PROCEDURE

1. CHECK AND RECORD READING RADIUS AND BOOM INDICATIOR AT FOUR (4) VALUES INCLUDING MAXIMUM AND MINIMUM.

(ALL REDIUS MEASUREMENT ARE TO BE TEKEN FROM THE CENTERLINE OF CRANE ROTATION)

ACTUAL	INDICATED RADIUS (FT)
A) 15' (MINIMUM)	15
B) 20'	20
C) 25'	25
D) 30' (INTERMIDIATE)	30
E) 40'	40
F) 50' (INTERMIDIATE)	50
G) 60'	60
H) 75' (MAXIMUM)	75

2. CHECK AND RECORD READING ON BOOM ANGLE / DEGREES.

SPECIFICATION		INDICATED BOOM ANGLE (DEGREES)
1). MAXIMUM.	80 DEGREES	80
2). INTERMEDIATE.	60 DEGREES	60
3). INTERMEDIATE.	40 DEGREES	40
4). MINIMUM.	0 DEGREES	0

3. READING ON LOAD INDICATOR WITHOUT SLINGS OR LOAD / LBS. (LOAD BLOCK + WIRE ROPE)

ACTUAL		INDICATOR READ FREE LOAD, (LBS)
1). MAXIMUM RADIUS	750 LBS.	750
2). MINIMUM RADIUS	800 LBS.	800

4. CHECK AND RECORD ENGINE HIGH IDLE SPEED / RPM.

SPECIFICATION		INDICATED OF FUNCTIONAL (RPM)
1). IDLE SPEED	850 RPM	850
2). LOW SPEED	– RPM	–
3). HIGH SPEED	2200 RPM	2200

5. FUNTIONALLY TEST THE FOLLOWING.

ACTUAL	INDICATED OF FUNCTIONAL (TESTED)
A) MAIN HOIST ANTI -TWO BLOCK.	function
B) AUXILIALY HOIST ANTI -TWO BLOCK.	function
C) HIGH BOOM ANGLE KICK OUT.	N/A
D) LOW BOOM ANGLE KICK OUT.	N/A
E) PRIME MOVER SHUTDOWN.	function
F) EMERGENCY SHUTDOWN.	function
G) ROTATE CRANE 360 LEFT.	Smoot
H) ROTATE CRANE 360 RIGHT.	Smoot

6. RECORD HYDRAULIC RELIEF VALVE PRESSURE SETTING ON FOLLOWING HYDRAULIC FUNCTION:

SPECIFICATION		INDICATED PRESSURE (PSI)
A) MAIN HOIST	PSI.	3200
B) AUXILIALY HOIST	PSI.	2900
C) BOOM HOIST	PSI.	3000
		1500

TEST CONDUCTED BY: [redacted] POSITION :

CRANE OPERATOR : [redacted] POSITION : Jr. Mech.

COMMENTS : DATE :

CRANE Mfg.: Nautilus 11, 13, 21 Aug, 2025 LOCATION DATA BASE - PM JOB TASK CARD
MODEL: 180B1HD-80 (MS) BEWS WO:1259153 Crew Size:
SERIAL NUMBER: Estimated Hours:

SYSTEM	TASK		Specification	Record/Reading
Safety	Perform Job Safety Analysis (JSA)		Company Spec/Standard	(✓) YES ( ) NO
	Obtain "COMPANY" PERMIT TO WORK		Company Spec/Standard	(✓) YES ( ) NO
	Perform Tool Box Talk		Company Spec/Standard	(✓) YES ( ) NO
	BEFORE/AFTER JOB EXECUTION: Ensure to comply with isolation procedure (LOCK OUT/TAG OUT, WARNING SIGNS and BARRIERS).		Company Spec/Standard	(✓) YES ( ) NO
Required Tools	Insure proper tools are available at the job site		Company Spec/Standard	(✓) YES ( ) NO
	Tool bag		Company Spec/Standard	(✓) YES ( ) NO
	Tool box		Company Spec/Standard	(✓) YES ( ) NO
	Tool Container		Company Spec/Standard	(✓) YES ( ) NO
	MPI equipment and operator		Company Spec/Standard	( ) YES (✓) NO
	Check safety harness Software and Hardware should be good condition before use		Company Spec/Standard	(✓) YES ( ) NO
	Check Rescue Equipment ready to use onsite		Company Spec/Standard	(✓) YES ( ) NO
	Portable Scaffolding and Crew if require		Company Spec/Standard	(✓) YES ( ) NO
Lubricants	Insure proper lubricants and consumables are available at the job site.		Company Spec/Standard	(✓) YES ( ) NO
	Hydraulic System - Hydraulic Oil	Rando HD-68	OEM Manual	(✓) YES ( ) NO
	Slew Gearbox - Gear Oil	Meropa 220	OEM Manual	(✓) YES ( ) NO
	Auxiliary Hoist - Gear Oil	Meropa 220	OEM Manual	(✓) YES ( ) NO
	Main Hoist - Gear Oil	Meropa 220	OEM Manual	(✓) YES ( ) NO
	Grease Points - Lithium Based **IT MUST NOT INCLUDE MOLYBDENUM DISULPHIDE**	MULTIFAK EP#2	OEM Manual	(✓) YES ( ) NO
	Open Gear Teeth - Open Gear Lube highly water resistant and of an adhesive nature.	OMEGA 73	OEM Manual	(✓) YES ( ) NO
	Pneumatic Lubricator	SAE Grade 10	OEM Manual	(✓) YES ( ) NO
	Wire rope Lubricant Company preferred grade	Birlube 70	OEM Manual	(✓) YES ( ) NO
	Engine Oil - SAE Grade 15W-40 (Delo Gold)	15W-40	OEM Manual	(✓) YES ( ) NO
	Safe Load Indicator fluid	W-15	OEM Manual	(✓) YES ( ) NO
	Engine Radiator - Should have radiator preservatives additives	Cat® SCA	OEM Manual	(✓) YES ( ) NO
Consumables	Spray Cold Galvanize		Company Spec/Standard	(✓) YES ( ) NO
	Denso Tape		Company Spec/Standard	(✓) YES ( ) NO
	WD-40		Company Spec/Standard	(✓) YES ( ) NO
History Review	Before starting work, tasks preparation at least 1 day prior to starting work: 1. Review history PM/ CM from Roving Team, 2. Review last PM/ CM/ PMI from Crane Mech, 3. List out all punch list and prepare parts. 4. Review last Certificate task performed		API RP 2D	(✓) YES ( ) NO
	Require to update part history from Crane Mech on following main compenents to ensure the right parts are prepared: - Aux/ Main/ Boom Cylinder, Engine, Swing Gearbox, etc. Reference: Crane OEM information of each part need to be recorded - Manufacturer & Contact info - Model & serial number - Installation date		Company Spec/Standard	(✓) YES ( ) NO
	Review history data from Certificates and incorporate into current PM: - Pull Test Certificates (ongoing update, 4 yr. history). - Load Test Certificates (ongoing update, 4 yr. history). - Wire Rope Certifications (running rope and standing rope) (life of rope). - Hoist Certifications for hoist classified as "personnel handling" hoist.		API RP 2D	(✓) YES ( ) NO
	Review Last Preventative Maintenance Records (Inspection Reports) - Pre-use (Pre-Post Inspection) - 6 Monthly (API RP 2D Not Defined, Company Standard) - 1 Yearly (API RP 2D Defined Annual Inspection)		API RP 2D	(✓) YES ( ) NO
Lifting Gear Preparation	Visually Inspect (Sling, sling hooks and shackles) include Webslling / Chain		Company Spec/Standard	(✓) YES ( ) NO
	Check color code / Tag & date inspection		Company Spec/Standard	(✓) YES ( ) NO
General	Determine if access route to-from crane is clean, safe, unobstructed and adequately protected against falls, tripping and slipping		Company Spec/Standard	(✓) YES ( ) NO
	Check drain lines and drip pans for deterioration		API RP 2D	(✓) YES ( ) NO
	Remove any sediment collected in the bottom of drip pans		Industry Standard	(✓) YES ( ) NO
	Check for general crane and components for loss of protective coating and corrosion		Industry Standard	(✓) YES ( ) NO
	Check for missing or loose ,corrosion, deformation pins, pin keepers, bolts, nuts, fasteners of all laders, cages and working platform		API RP 2D	(✓) YES ( ) NO
	Apply grease to exposed grease parts (control valve spools, ball-ring gear, parking brake valve, etc.)		OEM Manual	( ) YES ( ) NO
Prime Mover	Engine CUMMIN		OEM Manual	( ) YES ( ) NO
	CUMMIN Model : C8.3	S/N.:	OEM Manual	46937757
		AR.No.:	OEM Manual	
	Change engine lube oil & oil filter and check the condition of old oil. As found : Normal		OEM Manual	(✓) YES ( ) NO
	Check diesel tank level, top up if required.		OEM Manual	(✓) YES ( ) NO
	Check / Clean crankcase breather cap. Change if required		OEM Manual	(✓) YES ( ) NO
	Check / Clean air cleaner filter, Replace if require. (Note : Include inspect air cleaner housing)		OEM Manual	(✓) YES ( ) NO
	Check condition and inspect of the radiator and cap.		OEM Manual	(✓) YES ( ) NO
	Check for any signs of leaks on or around the engine ie; Crankshaft seal for front & rear seal , Engine oil cooler. As found: Good		OEM Manual	(✓) YES ( ) NO
	Check condition exhaust system for leaks, corrosion, insulation and general. As found : Good		OEM Manual	(✓) YES ( ) NO
	Check condition of all engie hoses and tube. (Fuel supply,Cooling system and Lube oil system. As found: Good		OEM Manual	(✓) YES ( ) NO
	Drain water and sediment form diesel tank. As found : Normal		OEM Manual	(✓) YES ( ) NO
	Check / Clean Diesel tank level sightglass and diesel tag.		OEM Manual	(✓) YES ( ) NO
	Apply grease of fan bearing/shaft.		OEM Manual	(✓) YES ( ) NO
	Check that neither the top nor bottom tensioner arm stop is touching the cast boss on the tensioner body for CUMMINS engine as picture		OEM Manual	(✓) YES ( ) NO
	Change water coolant and check condition base of water coolant and record PH.		OEM Manual	(✓) YES ( ) NO
	COOLANT PARAMETERS (PH):	6 or higher	OEM Manual	PH = 7
	HOUR METER PARAMETERS:	LAST READING 3838 HRS	OEM Manual	3853 HRS

[redacted] / 22/8/25

SYSTEM	TASK			Specification	Record/Reading
	Check and retigthen the bolts of all engine base. / Inspection mouting rubber. As found : Good			OEM Manual	(✓) YES ( ) NO
	Inspect the engine fan blades that there is a break is it severely distorted or rusted. As found : Good			OEM Manual	(✓) YES ( ) NO
	Check condition fan blade and guard cover.			OEM Manual	(✓) YES ( ) NO
	Check engine HYD starter drive gear bendix and fly wheel gear teeth condition and record. **Replace if required"			OEM Manual	(✓) YES ( ) NO Bendix Gear: 70 % Fly wheel Gear: 90 %
	Check and inspect condition the Bendix of hydraulic Starter motor.			OEM Manual	(✓) YES ( ) NO
	Lubricate and check engine throttle system.			OEM Manual	(✓) YES ( ) NO
	Determine if the tachometer operates properly: Record Value of Idle & Max Speed (RPMs) Note: Too low Idle (RPMS) will cause excessive worn at winch brake			OEM Manual	
	ENGINE RPM SPECIFIC	IDLE/LOW SPEED	900-1000 RPM	OEM Manual	900 RPM
		MAX SPEED	2200 RPM	OEM Manual	2200 RPM
	Confirm engine oil pressure as per Parameters below and Record Value:			OEM Manual	
	ENGINE OIL PRESSURE SPECIFIC	Minimum	Not lower then 10 PSI	OEM Manual	30 PSI
		Maximum	70 PSI	OEM Manual	70 PSI
	Confirm engine fuel pressure Parameters are correct and Record Value:			OEM Manual	
	ENGINE FUEL PRESSURE SPECIFIC**	Normal	Not lower then 18 PSI	OEM Manual	(✓) YES ( ) NO As found 40 PSI
	Confirm engine temperature Parameters and Record Value:			OEM Manual	
	ENGINE WATER TEMP SPECIFIC	NORMAL	158-195 F	OEM Manual	180 F
	Test engine SAFETY DEVICE- ensure engine kill cable shuts off FUEL supply			API RP 2D	(✓) Function ( ) False
	Test engine SAFETY DEVICE- ensure EMERGENCY KILL CABLE - shuts off AIR supply			API RP 2D	(✓) Function ( ) False
	Test engine SAFETY DEVICE- ensure ENGINE low tube oil - releases OIL PRESSURE to ctivate Alarm Air System ****Note*** Engine oil pressure low alarm at 20 PSI*			Company Spec/Standard	(✓) Function ( ) False
	Test engine SAFETY DEVICE- ensure HIGH TEMP - releases OIL PRESSURE to activate Alarm Air System			Company Spec/Standard	(✓) Function ( ) False
	Check and clean up the water separator filter.			OEM Manual	(✓) YES ( ) NO
	Check the general conditionand functioning of turbocharger. Note;			OEM Manual	( ) Leak (✓) Not Leak
	Change fuel filter and inspect the primary hand pump.			OEM Manual	(✓) YES ( ) NO
	Check and Clean up the strainer of transfer pump. **			OEM Manual	(✓) YES ( ) NO
	Check water temperator regulator.(Thermostat). Change if require refer from cooling temperature.			OEM Manual	(✓) YES ( ) NO
	Change corrosion resistor(water filter)			OEM Manual	(✓) YES ( ) NO
	Change cooling fan drive belts.			OEM Manual	(✓) YES ( ) NO
	Check condition of water pump housing.			OEM Manual	(✓) YES ( ) NO
	Check or adjust the engine valve lash. (Intake vale = 0.012", Exhaust valve =0.022 ")			OEM Manual	(✓) YES ( ) NO ( ) N/A
	Check condition wear of pump drive spline and record ***Note; Remaining 70% of Original Spline Surface must be replace.*			Company Spec/Standard	75 % Remaining
	Check condition wear of adaptor Coulping spline shaft and record ***Note; Remaining 70% of Original adaptor Coulping spline shaft Surface must be replace.*			Company Spec/Standard	90 % Remaining
	Check condition wear of Coulping spline and record. Re-tigthen of all lock bolts. ***Note; Remaining 70% of Original adaptor Coulping spline shaft Surface must be replace.*			Company Spec/Standard	90 % Remaining
Hydraulic Start System (Apply for C2-Remote P/F Only)	**Check pressure system** at the pressure gauge which should reach 3,000 PSI as standard when the system is FULLY charged. Record Value. (As the system cools down, the pressure should drop slightly and finally stabilised.)			OEM Manual	(✓) YES ( ) NO
	Visually inspect all hydraulic connections and hoses for leaks and retighten if necessary. (Caution: This should NOT be done if the system is under pressure.) 1. Slowly release system pressure by loosening the bleed screw on top of the hand pump. 2. Ensure no pressure remains, retighten the suspected leak fitting or replace the damaged hose or component. 3. Retighten the bleed screw on the hand pump. 4. Pump the system up to 2200 - 2600 PSI 5. Inspect that the leak was eliminated.			OEM Manual	(✓) YES ( ) NO
	Function check Accumulator Pre-charge. (Caution: This should NOT be done if the system is under pressure.) 1. Shut the engine off, release system pressure via the bleed screw on top of the hand pump 2. Retighten bleed screw and actuate the hand pump. The pressure will rapidly increase and then stabilised. This pressure is related to accumulator gas pre-charge pressure. 4. If the pressure rapidly increase to 3000 PSI, it indicates that the accumulator has lost its gas charge. 5. Troubleshoot as necessary			OEM Manual	(✓) YES ( ) NO
	Check function rechaging system by function boom down while the engine running. 1. The crane engine is running at 1,000-1500 RPM. 2. Slowly control lever boom function down for charging pressure to accumulator. 3. This pressure should read on prssure gauge between 2200 - 2600 PSI depending on the recharge ratio 80% std. (90% optional). Record Pressure Value.			OEM Manual	2500 PSI
	Check Nitrogen pressure in Accumulator ***Note**spec @ 1,500 psi as follow schematic and if found pressure loss below 1400 PSI then prepare recharge nitrogen in system			OEM Manual	1500 PSI
Pneumatic System	Check for noisy compressor operation, which could indicate a worn drive gear coupling, a loose pulley or excessive internal wear			OEM Manual	(✓) YES ( ) NO
	Check Air Compressor external oil supply and return lines, if applicable, for kinks, bends, or restrictionsto flow			OEM Manual	(✓) YES ( ) NO
	Inspect the Air compressor discharge port, inlet cavity and discharge line for evidence of restrictions and carboning. (If excessive buildup is noted)			OEM Manual	(✓) YES ( ) NO
	Check all hose connections are sound and all mounting and pivoting connections are secure.			OEM Manual	(✓) YES ( ) NO
	Check condition / Clean and lubricate unloading valve			OEM Manual	(✓) YES ( ) NO
	Check proper air pressure is available for the system. Record Value.			OEM Manual	
	AIR SYSTEM PARAMETERS:		MAX 60 PSI	OEM Manual	60 PSI
	Visually inspection condition of air receiver for signs of corrosion or loose of structural integrity.			Industry Standard	(✓) YES ( ) NO
	Check the hose, piping and tubing for mechanical damage, corrosion, splits, blisters, cracking or excessive abrasion on the outer surface			Industry Standard	(✓) YES ( ) NO
	Drain off air filter and reciever to remove condensed water. If water is present, drain until water is removed.			Industry Standard	(✓) YES ( ) NO
	Check proper operation of pop off valve, by manually functioning valve.			Industry Standard	(✓) YES ( ) NO
	Check proper operation of manual latch valve, by manually functioning latch.			Industry Standard	(✓) YES ( ) NO
	Check proper operation of small engine alarm horn.			Industry Standard	(✓) YES ( ) NO

[redacted] / 22-8-25

SYSTEM	TASK		Specification	Record/Reading
Hoist / Brakes	Visually check a hoist exhibits erratic operation and/or unusual noise, the hoist must be taken out of service until it is inspected and serviced by a qualified technician. Continued operation of a hoist with a defect in a critical component may lead to loss of load control, property damage, serious injury or death.		OEM Manual	(✓) YES ( ) NO
	Visual exteriors of hoist, frames, drums and flanges for damage, leaks, cracks and wear and repair/replace as required to maintain the structural integrity of the hoist.		OEM Manual	(✓) YES ( ) NO
	Check all hoist mounting pins, bolts or other fasteners and replace or tighten as necessary.		OEM Manual	(✓) YES ( ) NO
	Lubricant level must be maintained between the minimum and maximum levels; midway up sight glass or at bottom of level plug port as equipped and check/clean plug vent. Use only the recommended type of lubricant.		OEM Manual	(✓) YES ( ) NO
	Inspect Brake Valve Opening Pressure test V/V 1-1/4" PD Series : no tower than 550 PSI V/V 1-1/2" CH Series : no tower than 575 PSI	Main	Braden Bulletin 527-Dec,1996	600 PSI
		Aux		590 PSI
	Inspect Brake cylinder opening pressure test. CH/PD Series : 400-450 PSI.	Main	Industry Standard	400 PSI
		Aux		400 PSI
	Measure differancian of static and dynamic brake. CH/PD Series : 150-250 PSI.	Main	Industry Standard	200 PSI
		Aux		150 PSI
	Check for external oil leaks and repair as necessary. This is extremely important due to the acceterated wear that will result from insufficient lubricating oil in the hoist.		OEM Manual	(✓) YES ( ) NO
	RECORD BOOM CYLINDER INFORMATION :	Boom cylinder Diameter:	OEM Manual	DIA: 12 Inch
		CY Number:	OEM Manual	L-8108-2 R-8108-1
		Serial Number:	OEM Manual	L-8241 R-8240
	RECORD MAIN HOIST INFORMATION :	Manufacturer:	OEM Manual	Braden
		Model:	OEM Manual	CH175A-23090-01-1
		Serial Number:	OEM Manual	0503396
	Check MAIN HOIST for proper operation and good condition		API RP 2D	( ) YES ( ) NO
	Brake test & record pressure of MAIN HOIST.		OEM Manual	(✓) YES ( ) NO As found: On Standard
	Change main hoist gear oil and inspect for small particles in the old oil. ** Refer to Onsite Gear Oil Sample Procedure ** ** Replace and send oil sample to SKL if abnormal ** ** Take photo of Oil Sampling for Reference**		OEM Manual	(✓) YES ( ) NO As found: Normal
	RECORD AUXILIARY HOIST INFORMATION :	Manufacturer:	OEM Manual	Braden
		Model:	OEM Manual	PD12C-19014-04-1
		Serial Number:	OEM Manual	1361242
	Check AUXILIARY HOIST for proper operation and good condition		API RP 2D	(✓) YES ( ) NO
	Brake test & record pressure of AUXILIARY HOIST		API RP 2D	(✓) YES ( ) NO
	Change Aux. hoist gear oil and inspect for small particles in the old oil. ** Refer to Onsite Gear Oil Sample Procedure ** ** Replace and send oil sample to SKL if abnormal ** ** Take photo of Oil Sampling for Reference** As found:		OEM Manual	( ) SEND SKL LAB (✓) NOT SEND SKL LAB
	Check pressre relief Valve: Determine hoistes' relief valve pressure gauge is working and giving accurate measurement by notice whether pressure gauge is vibrating or not. If not, set relief valve pressure in accordance with the schematic and parameters below. Record all readings.		OEM Manual	(✓) YES ( ) NO
	BOOM RELIEF VALVE TEST	Relief Specific: 3,000 PSI	OEM Manual	3000 PSI
	MAIN HOIST RELIEF VALVE TEST	Relief Specific: 3,250 PSI	OEM Manual	3250 PSI
	AUX HOIST RELIEF VALVE TEST	Relief Specific: 2,950 PSI	OEM Manual	2950 PSI
	SWING RELIEF VALVE TEST	Relief Specific: 1,500 PSI	OEM Manual	1500 PSI
	Measure Pressure of hoist motor case drains and Record Value Reference Bulletin: BRADEN Inspection, Testing, Preventive Maintenance and Special Operating Instructions For Planetary Hoists PB-308 latest edition for further details.		OEM Manual	
	MAIN HOIST CASE DRAIN for Gear Motor (Down Mode).	PRESSURE < 100 psi	Company Spec/Standard	5 PSI
	AUX. HOIST CASE DRAIN for Gear Motor (Down Mode).	PRESSURE < 100 psi	Company Spec/Standard	5 PSI
Hydraulic System	Check hydraulic tank oil level. Oil should be visible in the sight glass. Top up as required (3/4 Tank Minimum)		OEM Manual	(✓) YES ( ) NO
	Check hydraulic oil condition. (Check if running hours are more than 100 hours from last oil change or during Annual inspection) ** Refer to Onsite Hydraulic Oil Sample Procedure ** ** Replace and send oil sample to SKL if abnormal ** ** Take photo of Oil Sampling for Reference**	Rando HD-68	Company Spec/Standard	( ) SEND SKL LAB (✓) NOT SEND SKL LAB
Hydraulic System	Drain off 1 liter of oil to remove condensed water. If water is present, drain until water is removed and top up with clean oil		Industry Standard	(✓) YES ( ) NO
	Check for any hydraulic leaks		Industry Standard	(✓) YES ( ) NO
	Check the hydraulic hose, piping and tubing for mechanical damage, corrosion, splits, blisters, cracking or excessive abrasion on the outer surface		API RP 2D	(✓) YES ( ) NO
	Check that all hydraulic hose connections are sound and that all mounting and pivoting connections are secure.		Industry Standard	(✓) YES ( ) NO
	Lubricate hydraulic swivel in pedestal and insure tie down restrains are in place and preventing the swivel from rotating with the crane structure.		OEM Manual	(✓) YES ( ) NO
	Ensure the filler breather on tank is not covered or clogged		Industry Standard	(✓) YES ( ) NO
	Visually inspect for missing or loose pins, pin keepers, bolts, nuts, fasteners on all pumps, motors and valves		API RP 2D	(✓) YES ( ) NO
	* Re-tighten the stud bolt of hydraulic main pump and marking the nut for checking to prevent loosening. Note : Torqe spec model P76, P75, PGP/PGM350 ,PGP/PGM330 = 200 ft-lbs. , for model PGP/PGM315 = 140 ft-lbs. and PGP/PGM365 = 450 ft-lbs.		The Commercial Intertech manual	(✓) YES ( ) NO
	Check the filter bypass indicator, while engine is running		OEM Manual	(✓) YES ( ) NO
	With engine running (after all other items pass inspection), check the system for leaks around fittings, hoses, valves and reservoirs		Industry Standard	(✓) YES ( ) NO
	With engine running, check the source of any unusual noise or vibration that may cause or indicate equipment damage or wear		Industry Standard	(✓) YES ( ) NO
	Ensure all hoses are properly rated for the system, see "Parameters" for each system for details.		Industry Standard	(✓) YES ( ) NO
	Record hydraulic oil operating temperture. Note: Hydraulic fluid overheating temperature is over 180 F degrees or 82 C, degrees (reservoir temperature)		Industry Standard	130 Degree F
	Determine if hydraulic return pressure gauge is working and giving accurate measurements. Record readings			
	RECORD HYDRAULIC RETURN PRESSURE PARAMETERS:	60 PSI "maximum"	OEM Manual	60 PSI

[redacted] / 22-8-25

SYSTEM	TASK				Specification	Record/Reading
	Check and inspect the hydraulic return filters and seals.				OEM Manual	(✓) YES ( ) NO
	Function Testing and record pressures with engine at :			2,200 RPM	API RP 2D	
	BOOM FUNCTION TEST (Need Crane Mech to verify each platform)				OEM Manual	
	Boom Angle : 60 Degree (Recommend or as applicable)	UP	Cracking pressure	RECORD	OEM Manual	600 PSI
			Full Speed Pressure	RECORD	OEM Manual	800 PSI
		DOWN	Cracking pressure	RECORD	OEM Manual	800 PSI
			Full Speed Pressure	RECORD	OEM Manual	1200 PSI
	MAIN HOIST FUNCTION TEST (Need Crane Mech to verify each platform)				OEM Manual	
	Boom Angle : 60 Degree (Recommend or as applicable)	UP	Cracking pressure	RECORD	OEM Manual	400 PSI
			Full Speed Pressure	RECORD	OEM Manual	600 PSI
		DOWN	Cracking pressure	RECORD	OEM Manual	600 PSI
			Full Speed Pressure	RECORD	OEM Manual	1400 PSI
	AUX HOIST FUNCTION TEST (Need Crane Mech to verify each platform)				OEM Manual	
	Boom Angle : 60 Degree (Recommend or as applicable)	UP	Cracking pressure	RECORD	OEM Manual	400 PSI
			Full Speed Pressure	RECORD	OEM Manual	800 PSI
		DOWN	Cracking pressure	RECORD	OEM Manual	600 PSI
			Full Speed Pressure	RECORD	OEM Manual	1600 PSI
	SWING FUNCTION TEST (Need Crane Mech to verify each platform)				OEM Manual	
	Boom Angle : 60 Degree (Recommend or as applicable)	LEFT	Cracking pressure	RECORD	OEM Manual	100 PSI
			Full Speed Pressure	RECORD	OEM Manual	500 PSI
		RIGHT	Cracking pressure	RECORD	OEM Manual	100 PSI
			Full Speed Pressure	RECORD	OEM Manual	500 PSI
Electrical system, Crane Boom Lighting and red obstruction light	Check the electrical junction boxes, wires and connections for deterioration, desiccant bags, (replace as required)				Industry Standard	(✓) YES ( ) NO
	Check the condition of the grounding and lighting protection system.				Company Spec/Standard	(✓) YES ( ) NO
	Visually inspect boom floodlight and light guards for loose, missing, corroded				Company Spec/Standard	(✓) YES ( ) NO
	Check condition pipe support , U-bolt ,nuts of boom floodlight and Electric slipring for loose , missing , corroded				Company Spec/Standard	(✓) YES ( ) NO
	Check Electric slipring/swivel for 360° continuous rotation				OEM Munnal	(✓) YES ( ) NO
	Check Water ingress, condensation in electric slipring, red obstruction light and boom floodlight				OEM Munnal	(✓) YES ( ) NO
	Check feely movement and lubricate of boom floodlight				OEM Munnal	(✓) YES ( ) NO
	With generator in operation, intergize all lights to unsure proper function.				API RP 2D	(✓) YES ( ) NO
	Check condition of crane boom lighting and safety net is secured with strong point. * **Safety net should be replace 24 months after installation (2 year)***			Last Installation date _____	Company Spec/Standard	(✓) YES ( ) NO
	Check function of crane sound signal				Company Spec/Standard	( ) YES ( ) NO (✓) N/A
	Check function of crane boom lighting at boom upper section				Company Spec/Standard	(✓) YES ( ) NO ( ) N/A
	Check function of crane boom lighting at boom lower section				Company Spec/Standard	(✓) YES ( ) NO ( ) N/A
	Check function of crane boom lighting at winch skid				Company Spec/Standard	(✓) YES ( ) NO ( ) N/A
	Check function of crane boom lighting at crane cabin				Company Spec/Standard	(✓) YES ( ) NO ( ) N/A
	Check function becon light at boom tip				Company Spec/Standard	(✓) YES ( ) NO ( ) N/A
	Inspection wire rope guide & Roller assembly				Company Spec/Standard	(✓) YES ( ) NO
	Visually inspect red obstruction light pipe support, u-bolts, nuts connection to hand rail for loose, missing, corroded				Company Spec/Standard	(✓) YES ( ) NO
	Visually inspect safety sling attached to the red obsruction light and its base for loose, missing, corroded				Company Spec/Standard	(✓) YES ( ) NO
	Visually inspect red obstruction light function. The light is designed to turn on all the time.				Company Spec/Standard	(✓) YES ( ) NO
Operator Control Station	Check general condition of control panel, bolts, paint security, etc.				API RP 2D	(✓) YES ( ) NO
	Determine if there is a serviceable fire extinguisher in the vicinity of the crane				Company Spec/Standard	(✓) YES ( ) NO
	Determine if correct load chart is in use and easily visible for operator				API RP 2D	(✓) YES ( ) NO
	Determine if charts, indicators and hand signal chart are in the cabling and firmly attached				API RP 2D	(✓) YES ( ) NO
	Determine if angle/radius indicator plate is easily visible to operator and is moving freely.				API RP 2D	(✓) YES ( ) NO
	Check condition of control levers and determine if they "dead-man" back to the neutral position.				API RP 2D	(✓) YES ( ) NO
	Check condition of pressure gauges.				API RP 2D	(✓) YES ( ) NO
	Check proper control labels are firmly installed, completely legible and properly labeled				API RP 2D	(✓) YES ( ) NO
	Check controls for freedom-of-movement				API RP 2D	(✓) YES ( ) NO
	Check condition , Leak, freely moement of Dynamic swing break system *** Note; If HYD Oil loose in CYD reservoir must be refill*				OEM Manual	(✓) YES ( ) NO
	Check condition , Leak, freely moement of Accelerate System *** Note; If HYD Oil loose in CYD reservoir must be refill*				OEM Manual	(✓) YES ( ) NO
	Check all safety glass and rubber seal for proper condition				API RP 2D	(✓) YES ( ) NO ( ) N/A
	Function Test Horn. Note:.....Good.....				Industry Standard	(✓) YES ( ) NO ( ) N/A
	Ensure PRE/POST Check List and Pocket Manual in the cabin. Note;.....Yes.....				Company Standard	(✓) YES ( ) NO ( ) N/A
Load Indicator System	Visual check on fittings and connections for leaks, Fix leak if any. Note:.....Good.....				OEM Manual	(✓) YES ( ) NO
	Should any leaks exist, stop leak and recharge system, refer to maintenance manual				OEM Manual	(✓) YES ( ) NO
	Change and flushing Load cell fluid.				OEM Manual	(✓) YES ( ) NO
	Check general condition of tubbing, hoses, pins bolts, paint, etc.				Industry Standard	(✓) YES ( ) NO
	Insure load cell is free of obstructions				OEM Manual	(✓) YES ( ) NO
	Check condition of gauge(s) face and clean glass as required.				OEM Manual	(✓) YES ( ) NO
	Check the scale's operation and weighing accuracy. (Main Hoist) Remark : Maximum variance +/- 2% Note:.....Good.....				Company Spec/Standard	(✓) YES ( ) NO ( ) N/A

[redacted] / 22-8-25

SYSTEM	TASK	Specification	Record/Reading
	Check the scales operation and weighing accuracy. (Aux. Hoist) Remark : Maximum variance +/- 2% Note: Good	Company Spec/Standard	(✓) YES ( ) NO ( ) N/A
	Check the internal casting fluid of weight indicator. top up if required	Industry Standard	(✓) YES ( ) NO ( ) N/A
	Insure SWL tag matches ratings on the Crane Load Chart.	OEM Manual	(✓) YES ( ) NO ( ) N/A
	Insure Boom Length, matches the Crane Load Chart	OEM Manual	(✓) YES ( ) NO ( ) N/A
	Insure Boom Angle measurements and readings match the boom angle indicator.	OEM Manual	(✓) YES ( ) NO ( ) N/A
	Insure Boom Radius measurements indicate the distance from center line of the crane to the hook	OEM Manual	(✓) YES ( ) NO ( ) N/A
	Check Main load cell gap 1/4 (0.250) inch	OEM Manual	(✓) YES ( ) NO ( ) N/A
	Check Aux load cell gap 3/8(0.380) inch (Compression Load Cell Type)	OEM Manual	(✓) YES ( ) NO ( ) N/A
Pedestal & Structure	Visually check **Pedestal** for chipped/cracked paint, deformation, worn parts, dents, corroded areas, cracks weld, etc.	API RP 2D	(✓) YES ( ) NO
	Check water rain drain at pedestal must be not obstuct	Industry Standard	(✓) YES ( ) NO
	Check pin and cotter pin of pedestal missing , corrosion, wear, damage and exercise pin.	Industry Standard	(✓) YES ( ) NO
	Visually check **Base - Plate connection and Base hoist Structure** for chipped/cracked paint, deformation, worn parts, dents, corroded areas, cracks weld, etc.	API RP 2D	(✓) YES ( ) NO
	Check A fixed such as Handrial, Walkway, Grating, stationary structure without significant movement in response to waves and currents in normal operating conditions.	API RP 2C	(✓) YES ( ) NO
	Visually check and lubricate maintenance Jib. ***Note*** If on pedestal crane	OEM Manual	(✓) YES ( ) NO ( ) N/A
	Check maintenance jib is secure firmly. ***Note*** If on pedestal crane	OEM Manual	(✓) YES ( ) NO ( ) N/A
Box Boom & Luffing CYD	Check and Verify entire box boom and Boom CYD for loss of protective coating and corrosion. Note: Good	API RP 2D	(✓) YES ( ) NO
	Check and Verify entire box boom and Boom CYD for chipped/cracked paint, deformation, worn parts, dents, corroded areas, cracks, etc. Note: Good	API RP 2D	(✓) YES ( ) NO
	Check and Verify boom end connections, for bends, dents, corroded areas, cracked welds, and signs of mechanical damage, wear, etc. **any deviation should be reported**	API RP 2D	(✓) YES ( ) NO
	Check and Verify boom rest and wooden support to ensure it's in good condition	API RP 2D	(✓) YES ( ) NO
	Inspect pin and pin holes of Upper tank and Lower tank for excessive clearance	OEM Manual	(✓) YES ( ) NO
	BOOM CYLINDER PIN MAXIMUM TOLERANCE — 0.125 Inch (3mm)	Industry Standard	As found: On Standard
	Check BOOM CYLINDERS for proper operation and good condition	API RP 2D	(✓) YES ( ) NO
	Check Boom cylinder barrels and rods for leaks, mechanical damage and corrosion	Industry Standard	(✓) YES ( ) NO
	Check and measurement boom foot pin and connection pins for clearance	Industry Standard	(✓) YES ( ) NO
	BOOM FOOT PINS & BOOM BOX CONNECTER PIN TOLERANCE — 0.125 Inch (3mm)	Industry Standard	
	Boom Foot Pin Tolerance	Industry Standard	0.045 inch
	Boom Box Connecter Pin Tolerance	Industry Standard	0.010 inch
	Check connecting bolts of box boom loose, corrosion, wear, damage	OEM Manual	(✓) YES ( ) NO
	Lubricate boom foot pins and bushings	OEM Manual	(✓) YES ( ) NO
	Lubricate boom cylinder pins, bearings and bushings	OEM Manual	(✓) YES ( ) NO
	Boom function test angle/radius to correction **Note; The cylinder(s) mechanism shall be capable of elevating the boom from a minimum of zero degrees to the maximum recommended boom angle.	API RP 2C	(✓) YES ( ) NO
	Operation functional test and verify Boom Creeping down **Note ; Test at angle 60°	Industry Standard	(✓) YES ( ) NO As found: Not Creeping down
Wire Rope	Determine if parts-of-line match parts of line on the load chart in the crane cabin.	API RP 2D	(✓) YES ( ) NO
	Determine if visible portion of wire rope adequately lubricated. If not lubricate wire rope	API RP 2D	(✓) YES ( ) NO
	For each layer of wire rope on drum, check that all rope is parallel and each crossover point at hoist flanges is correct	API RP 2D	(✓) YES ( ) NO
	The top layer of rope must not be lower to the flange tips 2.5 in for Smooth drum,2 in for groove drum or 2.5 times of wire rope diameter	API RP 2C	(✓) YES ( ) NO
	Inspect wire rope for, kinking, crushing, broken wires, necking down of rope diameter, worn outside wires, corroded or broken wires at end connection, cutting or unstringing.	API RP 2D	(✓) YES ( ) NO As found: Good
	Note Running Ropes of rotation-resistant construction used in the main or auxiliary Hoist: - Four (4) Randomly distributed broken wires within 30 rope diameter - Two (2) broken wires in one stand within 6 rope diameter	API RP2D Edition 7	(✓) YES ( ) NO As found: Good
	One valley break can indicate internal rope damage requiring close inspection of this section of the rope. When one or more valley breaks are found in one lay length the rope should be retired.	API RP2D Edition 7	(✓) YES ( ) NO As found: Good
	Reductions for the rope diameter, from initial wire rope dimensional measurements, in a nonworking area (an area away from the sheaves) compared to the lowest diameter of rope measured in three working areas (areas where the rope regularly goes over a sheave) of more than the following is observed: — 3/64 in. (0.047 in.) (1.2 mm) for diameters up to and including 3/4 in. (19.1 mm); — 1/16 in. (0.062 in.) (1.6 mm) for diameters of 7/8 in. to 1-1/8 in. (22.2 mm to 28.6 mm); — 3/32 in. (0.093 in.) (0.8 mm) for diameter of 1-1/4 in. to 1-1/2 in. (31.8 mm to 38.1 mm); — For rope diameters greater than 1-1/2 in., a 5 % diameter loss from baseline measurement. — Wear of one-third the original diameter of the outside individual wires.	API RP2D Edition 7	(✓) YES ( ) NO As found dimension: Good
	Increase in the length of an individual rope lay is observed. This increase in lay length and accompanying reduction in diameter can be caused by failure of the core. This can occur more readily in ropes or rotation-resistant construction.	API RP2D Edition 7	(✓) YES ( ) NO As found: Good
	-Inspection and Verify running and standing rope from heat effect **Note; Not more than 250°C -There is evidence of heat damage from any source (i.e. engine exhaust, flare towers, stress corrosion cracking, etc.). Heat can be generated by passing a rope over a frozen or non-turning sheave, contact with structural members of the crane, improperly grounded welding leads or lightning strikes	Industry Standard	(✓) YES ( ) NO As found: Good
	With the boom at the highest possible angle and the main load block or overhaul ball at the water level, ensure there is a minimum of 5 wraps of wire-rope remaining on the drums. Note: (Thai law, requires minimum of 2 wraps)	API SPEC 2C / Thai Law	(✓) YES ( ) NO
	Reference: - Running rope safety factor not less than 6 for wire rope that are running wire, (Thai law; Wire rope nominal breaking strength x number parts of line / Design factor 6) - Standing rope safety factor not less than 3.5 for wire rope that are stay cables, (Thai law)	Thai Law	(✓) YES ( ) NO ( ) N/A
	Measure and record nominal diameter of "running ropes" main and auxiliary (particularly on drum, equalizer sheave and at sockets, clips and dead end points) *****Nominal = several measurements added together divided by Number of measurements*****	API RP 2D	(✓) YES ( ) NO
	Inspect wire rope and record dimension.	API RP 2D	
	MAIN WIRE ROPE OD: — FULL DRUM	OEM Manual	0.645 inch
	HALF DRUM	OEM Manual	0.649 inch
	WATER LEVEL	OEM Manual	0.642 inch

[redacted] / 22-8-25

SYSTEM	TASK		Specification	Record/Reading
	AUX WIRE ROPE OD:	FULL DRUM	OEM Manual	0.644 inch
		HALF DRUM	OEM Manual	0.640 inch
		WATER LEVEL	OEM Manual	0.646 inch
	Slip-Cut 1 meter of all ropes at the wedge socket and re-wedge to prevent rust inside of wedge socket (at outward end of rope, not on hoist drum) Dead end tail length is never less than 6 inches, or: - Standard 6 to 8 Strand wire rope is not less than 7 times the rope diameter - Rotation Resistant Wire Rope is not less than 20 times the rope diameter		Company Spec/Standard	✓ YES ( ) NO
	U-bolt and Fist Grip Clips: Extreme care should be exercised to assure proper orientation of U-bolt clips. The U-bolt segment shall be in contact with the wire rope dead-end. The orientation, spacing, torquing, and number of all clips shall be in accordance with the crane manufacture's specifications.		API SPEC 2C	✓ YES ( ) NO
	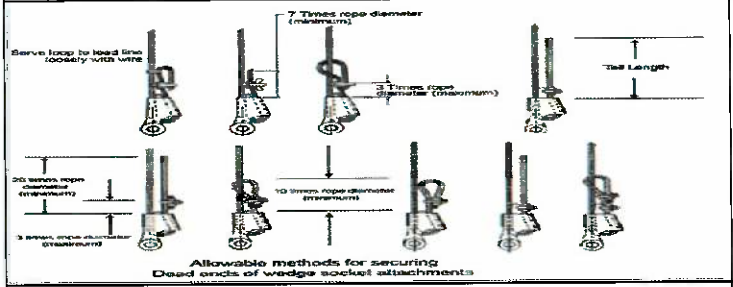 Allowable methods for securing Dead ends of wedge socket attachments		API SPEC 2C	Model ans Size wedge socket. Main hoist. Model..... Size.....5/8 - 3/4 Aux.Hoist. Model..... Size.....5/8 - 3/4
	Verify that the wedge socket and wedge are the correct size for the rope in use and record the size		API SPEC 2C	✓ YES ( ) NO
Sheaves & Bearings	Lubricate all sheave bearings.		API RP 2D	✓ YES ( ) NO
	Visually inspect all sheaves and bushings for cracks, wear and deterioration		API RP 2D	✓ YES ( ) NO As found.....Normal
	Visually inspect wire rope track of sheave for rope imprints, wear and deterioration. If damage exist sheave should be resurfaced or replaced.		API RP 2D	✓ YES ( ) NO As found.....Normal
	Pins retained by snap rings, bolt lock shafts, plates lock should be checked for missing or loose for all		API RP 2D	✓ YES ( ) NO
	Check wirerope guards and keepers for proper location and condition.		API RP 2D	✓ YES ( ) NO
	Determine if wire rope is jumping the sheaves, by looking for signs of damage on the sheave brim		Industry Standard	✓ YES ( ) NO
	Sheave Rope Profile for optimum Rope life the sheave groove profile should be correctly matched to the rope diameter		Industry Standard	✓ YES ( ) NO
	Check rope sheave should be machine grooved to adepth of not less than 1.5 times the norminal diameter of the rope		Industry Standard	✓ YES ( ) NO
	MAIN POINT SHEAVES: Note;.....Normal		Industry Standard	No.1 ✓ YES ( ) NO No.2 ✓ YES ( ) NO
	AUX SHEAVES: Note;.....Normal		Industry Standard	No.1 ✓ YES ( ) NO
	IDLER SHEAVES: Note;.....Normal		Industry Standard	AUX ✓ YES ( ) NO Main ✓ YES ( ) NO
	Pins for bronze bushing and straight roller bearing should have a running clearnace of .031 inch/ sheave of end play and should be adjusted accordingly.(count from left)		Industry Standard	✓ YES ( ) NO
	MAIN POINT SHEAVES:		Industry Standard	Sheave No.1 0.029 inch Sheave No.2 0.029 inch
	AUX SHEAVES:		Industry Standard	Sheave No.1 0.025 inch
	IDLER SHEAVES:		Industry Standard	Sheave AUX.....0.020 inch. Sheave Main.....0.020 inch.
	Ensure the sheaves are aligned and the fleet angle is correct **Remark; Wire rope User's Manual allows 2 degree on grooved winch drum, Smooth Drum shuold be not more than 1-1/2 degree		API RP 2D	( ) YES ( ) NO
	Determine if wire rope size and sheave sizes/grooves are compatible and record size. Sheave pitch diameter (D) to nominal wire rope diameter (d) ratio (D/d) shall not be less than 18:1		API SPEC 2C	✓ YES ( ) NO
	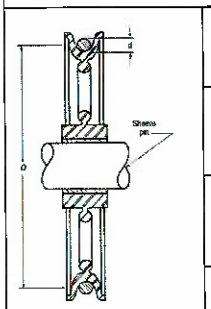	MAIN POINT SHEAVES: SHEAVE D / WIRE ROPE d = >18	API SPEC 2C	18 inch (D) 5/8 inch (d) 28 (Ratio D/d)
		AUX SHEAVES: SHEAVE D / WIRE ROPE d = >18	API SPEC 2C	14 inch (D) 5/8 inch (d) 22 (Ratio D/d)
		IDLER SHEAVES: SHEAVE D / WIRE ROPE d = > 18 (If applicable)	API SPEC 2C	18 inch (D) 5/8 inch (d) 28 (Ratio D/d)
		MAIN BLOCK SHEAVES: SHEAVE D / WIRE ROPE d = > 16	API SPEC 2C	16 inch (D) 5/8 inch (d) 25 (Ratio D/d)
Load Block	**Load Block:** Check the load block for cleanliness, binding sheaves, damaged or worn sheaves, worn or distorted sheave pins, broken bolts, and worn cheek weights. Note ;.....		Industry Standard	✓ YES ( ) NO As found.....Good
	Hook: Check the hook damage, excessive wear to the hook safety latch, hook swivel trunnions, thrust collar, securing, damage or missing lubrication fittings, proper lubrication, cracks and gouges, and if visibly bent or twisted or has been exposed to welding or arching. Note ;.....		Industry Standard	✓ YES ( ) NO As found.....Good

[redacted] / 22-8-25

SYSTEM	TASK	Specification	Record/Reading
	Hook: Tip has been bent more than 10 degree out of plane from the hook body	Industry Standard/API RP2D7	(✓) YES ( ) NO As found Normal
	Inspect the Pins for bronze bushing and straight roller bearing should have a running clearnace of .031 inch/ sheave of end play and should be adjusted accordingly	Industry Standard	(✓) YES ( ) NO
	Inspect Hook or shackle to swivel case clearance is set at .031 to .062 inch, Clearance exceeding .12 to .18 (ONLY CROSBY BRAND)	OEM Crosby	(✓) YES ( ) NO
	OEM STANDARD RECOMMEND that Crane block removal from service untill replaced and repair following below	**OEM STANDARD**	
	- Elongated center pin and hook trunnion holes exceeding 5% of Original diameter	OEM STANDARD	(✓) YES ( ) NO As found Normal
	-Material loss due to wear exceeding 10% of original section	OEM STANDARD	(✓) YES ( ) NO As found Normal
	-Sheave wire rop groove diameter smaller than 2.5%	OEM STANDARD	(✓) YES ( ) NO As found Normal
	Loosened tie bolts nuts, center pin round nuts, check weight cap screws and hook nut cap screws. Tie bolt nuts to be torqued to 35-40 ft.Lbs and restaked, all other fasteners wrench tight	**OEM STANDARD**	(✓) YES ( ) NO
	Throat opening - any distortion causeing an increase in throat opening of 5% not ot exceed 1/4 in. (6 mm.)(or as recommended by the manufacturer)	**ASME B30.10**	(✓) YES ( ) NO
	Inspect rope track worn in sheave groove, sheave must be resurface or replace	API RP 2D	(✓) YES ( ) NO
	Ensure the load block is not using "Cast Iron" check weights they can not be used as per API	API SPEC 2C	(✓) YES ( ) NO As found Good
	Determine if all hooks are equipped with properly operating safety latches and check for proper functioning	API RP 2D	(✓) YES ( ) NO
	Lubricate sheave bearings and swivels	OEM Manual	(✓) YES ( ) NO
	Re-thighten nut firmly to point at which trunion will just rotate, the Re-tighten set-screw in nut and thread condition as in the picture below.	Industry Standard	(✓) YES ( ) NO
	Last NDE inspection record	Industry Standard	Last inspect date —
	RECORD LOAD BLOCK INFORMATION : — Manufacturer:	OEM Manual	MCKISSICK
	Model:	OEM Manual	M30D14-H
	Serial Number:	OEM Manual	4131982G
	Record Load block measurements and details for future comparison with historical data ☒	Industry Standard	(✓) YES ( ) NO
	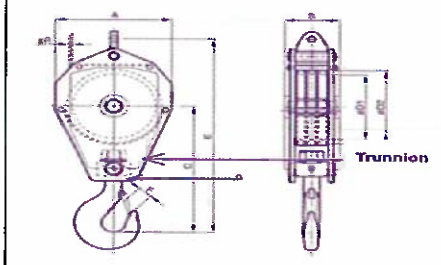 — A - Block OD	Industry Standard	17.5 mm/ inch
	B - Block length	Industry Standard	12.5 mm/ inch
	C - Center of Pin to hook Saddle	Industry Standard	28 mm/ inch
	D1 - Sheave Diameter	Industry Standard	14 mm/ inch
	E - Block Width	Industry Standard	34.5 mm/ inch
	F - Throat Opening	Industry Standard	6.5 mm/ inch
	G - Trunnion	Industry Standard	0.035 mm/ inch
Aux. Ball	**Inspect Auxiliary ball for cleanliness, binding swivel, work pad-eye hole. Inspect the hook damage, excessive wear to the hook safety latch. Bent connector plates,Severe corrosion pitting, hook swivel trunnions, thrust collar, securing, damage or missing lubrication fittings,Loose, missing or damaged retaining nuts, cotter pins or swivel set screws ,Missing or illegible rating and warning tags, proper lubrication, cracks and gouges, and if visibly bent or twisted or has been exposed to welding or arching.**	Industry Standard	(✓) YES ( ) NO
	Hook: Tip has been bent more than 10 degree out of plane from the hook body	Industry Standard/API RP2D7	(✓) YES ( ) NO
	OEM STANDARD recommend that Crane overhaul ball removal from service untill replaced and repair following below	**OEM STANDARD**	
	- Elongated ball pin holes, hook latch pin holes and swivel eye exceeding 5% of original diameter.	OEM STANDARD	(✓) YES ( ) NO As found Normal
	-Swivel end play gap exceeding .08". Excessive end play indicates damaged internal set screw	OEM STANDARD	(✓) YES ( ) NO As found Normal
	-Material loss due to wear exceeding 10% of original section	OEM STANDARD	(✓) YES ( ) NO As found Normal
	Throat opening - any distortion causeing an increase in throat opening of 5% not ot exceed 1/4 in. (6 mm.)(or as recommended by the manufacturer)	**ASME B30.10**	(✓) YES ( ) NO
	All hooks that lift personnel are to have a positive locking safety latch ****locking Pin to be used while lifting personnel****	API RP 2D	(✓) YES ( ) NO
	*** Temperature Effected : When hooks are to be used at temperature above 400° F. (204°C) or below -40°F (-40°C), the hook manufacturer or a qualified person should be consulted *** Chemically Active Environment : The strength of hooks can be affected by chemically active environments, such as caustic or acid substances or fumes. The hook manufacturer or qualified person should be consulted before hooks are used in chemically active environment	**ASME B30.10**	
	Verify to ensure nut firmly at which trunion rotate. Identify to set-screw in nut/ swivel/ counter pin and thread condition.	Industry Standard	(✓) YES ( ) NO
	Last NDE inspection record	Industry Standard	Last inspect date —
	RECORD AUX BALL INFORMATION : — Manufacturer:	OEM Manual	MCKISSICK
	Model:	OEM Manual	M87T200E
	Serial Number:	OEM Manual	0831397
	Record Auxiliary Ball measurements and details for future comparison with historical data: For Model M807T200E ONLY	Industry Standard	
	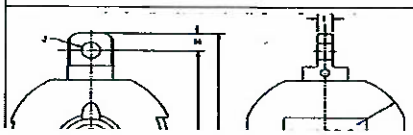 — AA Dimensions 3.0 Inch	Industry Standard	3.0 mm/ inch
	A Dimensions 24.89 Inch	Industry Standard	24.8 mm/ inch
	B Dimensions 21.71 Inch	Industry Standard	21.7 mm/ inch

[redacted] / 22 - 8 - 25

SYSTEM	TASK		Specification	Record/Reading
	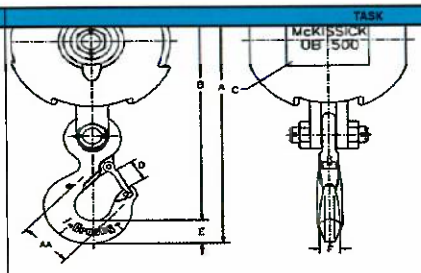	C Dimensions 12.50 Inch	Industry Standard	12.5 mm/ inch
		D Dimensions 1.61 Inch	Industry Standard	1.6 mm/ inch
		E Dimensions 1.81 Inch	Industry Standard	1.8 mm/ inch
		F Dimensions 1.38 Inch	Industry Standard	1.3 mm/ inch
		H Dimensions 1.38 Inch	Industry Standard	1.3 mm/ inch
		I Dimensions 0.88 Inch	Industry Standard	0.8 mm/ inch
		J Dimensions 1.31 Inch	Industry Standard	1.3 mm/ inch
Safety system	Check Condition anti - two block , hanging chain ,eye bolts , fix bolts , shackle for missing , corrosion , erosion , deformation		API RP 2D	(✓) YES ( ) NO
	Check anti - two block kick out plate for freely movement		Company Spec/Standard	(✓) YES ( ) NO
	Check anti-2-block device proper function of Main winch		Company Spec/Standard	(✓) Function ( ) False
	Check anti-2-block device proper function of Aux. winch		Company Spec/Standard	(✓) Function ( ) False
	Check relation of boom radius and boom angle (lowest, middle, highest) with refrence to load chart. Recharge fluid W-15 to load indicator, if required.		API RP 2D	(✓) YES ( ) NO
	Functional test of emergency lowering system (See procedure in Emergency Load Lowering Box). **Note:** Keep for 1 Yr PM to sustain crane mechanic competency. **Caution:** Function test must be performed on top deck with max 2-foot height.		Company Spec/Standard	(✓) YES ( ) NO ( ) N/A
	Visually check emergency load lowering kit. Ensure EMERGENCY LOWERING PROCEDURE and MATERIAL LIST are in the box. - Ensure ALL items shown on the list are in the box and in good condition - **SECURE THE BOX WITH A TIE WRAP.**		Company Spec/Standard	(✓) YES ( ) NO ( ) N/A
Slew Mechanism	Visually check for damage and excessive wear on gear teeth		OEM Manual	(✓) YES ( ) NO
	Visually check slew gear box in the area of oil seal for any leaks		API RP 2D	(✓) YES ( ) NO
	RECORD SLEW GEAR BOX INFORMATION :	Manufacturer:	OEM Manual	ESK
		Model:	OEM Manual	250 A DICC4-51
		Serial Number:	OEM Manual	TOS-01-19
	CHECK and RE-TORQUE swing drive gearbox mounting bolts at following brands: - ESKRIDGE, Model: 250 = 150 FT-LBS		API RP 2D	(✓) Yes ( ) No
	Check swing gearbox oil level/condition, top up if required	Meropa 220	OEM Manual	(✓) YES ( ) NO
	Monitor slew gearbox oil condition by visually examine for burnt smell, metal particles, and/or other contaminants, record and change if found.		OEM Manual	(✓) CHANGE OIL ( ) NOT CHANGE OIL
	Change slew gear box oil		OEM Manual	(✓) CHANGE OIL ( ) NOT CHANGE OIL
	Grease all pivot points of slew ring (bearing)		OEM Manual	(✓) YES ( ) NO
	Grease open gears (pinion)		OEM Manual	(✓) YES ( ) NO
	Rotate crane 360 degree and check smoothness of operation		OEM Manual	(✓) YES ( ) NO
	Check swing drive static parking brake for proper operation Caution: **DO NOT stop the swing of the crane with this static brake (parking brake)**		OEM Manual	(✓) YES ( ) NO
	Check swing drive dynamic parking brake for proper operation		OEM Manual	(✓) YES ( ) NO
	Check swing lock mechanism condition; corrosion ,dent , loos all part,worn and wear		OEM Manual	(✓) YES ( ) NO As found condition Good
	Check swing lock mechanism freely lock and unlock for function. **Check and inspect for hydraulic for leaks on actuator model.**		OEM Manual	(✓) YES ( ) NO As found condition Good
	Check condition of slew ring bolts e.g. Bolt grade and washers. Caution: Use only hardened flat washers under head of bolt. Do not use lock washers, or regular flat washers.		Industry Standard	(✓) YES ( ) NO As found condition Good
	Monitor ball-ring grease sample. If found wear and tear particles, take sample and send to lab. **Wear assessment by grease sample analysis—wear may be monitored by periodic grease sample analysis as describe in this section. Grease samples should be collected every twelve months as a minimum and the results of the analysis recorded; this period should be shortened if obvious metal or contaminants are present.		API RP 2D	( ) SEND TO LAB (✓) NOT SEND TO LAB As found Good
	Verify crane condition and load test as separate procedure. **Table 1—Static/Onboard Test Load and Radius** Static/Onboard Rated Load at a Specific Radius lb (kg) / Test Loads In Excess of Static/Onboard Rated Load at a Specific Radius ≤ 40,000 (18,144) / 25 % > 40,000 ≤ 100,000 (>18,144 ≤ 45,356) / 10,000 lb (4536 kg) > 100,000 (45,356) / 10 %		API 2C	(✓) YES ( ) NO Specific test load 6000 lbs.
	Verify crane condition and load test as separate procedure. " Record crane load test in load test form."		Company Standard	(✓) YES ( ) NO

Risk Level Definitions: The following 3 levels indicate the impact the noted deficiency poses to the operation or structural integrity of the equipment:

Level 1 = Incidental	Level #2 = Restricted Operation	Level #3 =Out of Service
Minor deficiency that is recommended to be promptly addressed, but poses no safety and/or environmental risk. The crane can still be operated at full duty.	Deficiency identified that has the potential to limit, de-rate or damage the crane, its surroundings and/or the environment. The duty and locked/ tagged out until the crane's duty and operation should be de-rated or service restricted.	The crane should be removed from duty and locked/ tagged out until the deficiency is rectified.

System:	Risk Level:	Component:		In Accordance with:	
		Location:		Date Originated:	

Description:

Recommended Action:

[redacted] / 22-8-25

SYSTEM	TASK		Specification	Record/Reading
Recommended urgency timeframe for corrective action:		Completed Date:	Completed By:	

System:	Risk Level:	Component:		In Accordance with:	
		Location:		Date Originated:	
Description:					
Recommended Action:					
Recommended urgency timeframe for corrective action:			Completed Date:	Completed By:	

System:	Risk Level:	Component:		In Accordance with:	
		Location:		Date Originated:	
Description:					
Recommended Action:					
Recommended urgency timeframe for corrective action:			Completed Date:	Completed By:	

System:	Risk Level:	Component:		In Accordance with:	
		Location:		Date Originated:	
Description:					
Recommended Action:					
Recommended urgency timeframe for corrective action:			Completed Date:	Completed By:	

System:	Risk Level:	Component:		In Accordance with:	
		Location:		Date Originated:	
Description:					
Recommended Action:					
Recommended urgency timeframe for corrective action:			Completed Date:	Completed By:	

System:	Risk Level:	Component:		In Accordance with:	
		Location:		Date Originated:	
Description:					
Recommended Action:					
Recommended urgency timeframe for corrective action:			Completed Date:	Completed By:	

Job Completed By [redacted]

Date : 11, 13, 21 Aug, 2025

Action Taken : Respool wire rope Aux Winch (Bad spooling)

: Repair Filler neck for Cap Radiator.

"Completed"

THE PEDESTAL CRANE CONDITION VERIFICATION

Date : 13 Aug 25			
Crane Owner : CTEP/ COTL Field: Bonchamas Platform/ Vessel: BEWS			
Crane Owner 's representative : (Mech Supv./ M'Dent) [redacted]			
Qualified inspector : (Qualified Crane Mechanic)			
Inspector 's company / agency : (Third Party or Outsource to witness if applicable)			
Manufacture Nautilus Fabrication by Oil States Year of Fabrication 2008 Country USA Model / Serial 180B1HD-30(MS) / 23A08 C Standard API Edition SIXTH 2004			Remark
Safe Working Load (SWL) ---> OEM	15.46 Metric Tonnes		
Safe Working Load (SWL) —> Existing via MOC, if applicable	— Metric Tonnes		
Boom length, Main	80 Ft		
Boom length, Auxiliary if applicable	— Ft		
Part of line main hoist	4 Part line		
Part of line auxiliary hoist	1 Part line		
Safe Working Load at longest boom radius	80 ft	8304 ~~Metric Tonnes~~/ Lbs	
Safe Working Load at shortest boom radius	13 ft	34,046 ~~Metric Tonnes~~/ Lbs	
The document of crane specification for Testing , Maintenance and Inspection are provided by:	OEM	MOC / Crane Engineer	
Has the crane ever been modified by MOC ? (To verify if this crane is modified with MOC --> Allow to test the crane. If this crane is modifed without MOC --> Not allow to test the crane)	YES	NO	(Employers are not allowed to modify or adjust any part of cranes or dericks or consent to other persons to do these things, that might reduce the safety of the employees who work with the cranes or derricks).
Does the rotating part have proper guard in place?	YES	NO	(Need mitigation plan)
Is the ladder and hand rail in place?	YES	NO	(Need mitigation plan)
Is the maintenance platform in place?	YES	NO	(Need mitigation plan)
Is the SWL tag labelled on crane pedestal, main block or aux ball?	YES	NO	(Need mitigation plan)
Verify if the crane major component damaged or not	YES (Need to repair or mitigate unsafe condition with MOC before testing)	NO	(Employers shall not allow employees work with damaged/ unsafe cranes or derricks)
Inspect boom end connections, for bends, dents, corroded areas, cracked welds, and signs of mechanical damage, wear, etc. **any deviation should be reported** Level 1 = Incidental : Minor deficiency that is recommended to be promptly addressed, but poses no safety and/or environmental risk. The crane can still be operated at full duty. --> Allow to test Level #2 = Restricted Operation: Deficiency identified that has the potential to limit, de-rate or damage the crane, its surroundings and/or the environment. The duty and locked/ tagged out until the crane's duty and operation should be de-rated or service restricted. --> To be derated Level #3 = Out of Service;The crane should be removed from duty and locked/ tagged out until the deficiency is rectified. --> Not Use	YES (To be verified)	NO	
Function Load Testing			
1. Verify Crane SWL (Existing)	3.0 Metric Tonnes		
2. Verify routine maximum actual load.	3.0 Metric Tonnes		
3. Select the specimen load to be more than actual routine load 1.25 times but not more than SWL. Example # 1 : Crane 's SWL is 18 Metric Tonnes. The routine maximum actual load is 2.4 Metric Tonnes. Therefore, the load testing shall be 2.4 x 1.25 = 3 Metric Tonnes. Example # 2 : Crane 's SWL is 18 Metric Tonnes. The routine maximum actual load is 16 Metric Tonnes. By calculation, the load testing is 16 x 1.25 = 20 Metric Tonnes more than SWL (18 MTon). Therefore, the load testing shall be 18 Metric Tonnes equal to SWL.	3.0 Metric Tonnes		
4. Use Auxiliary Winch if specimen load less than or equal 3 Metric Tonne	YES	NO	
5.Use Main Winch if specimen load more than 3 Metric Tonne	YES	NO	
6. The record of load testing : Fill in "Function Test Record" sheet attached.			

RECORDED FUNCTION TEST PROCEDURE

1. CHECK AND RECORD READING RADIUS AND BOOM INDICATIOR AT FOUR (4) VALUES INCLUDING MAXIMUM AND MINIMUM.

(ALL REDIUS MEASUREMENT ARE TO BE TEKEN FROM THE CENTERLINE OF CRANE ROTATION)

ACTUAL	INDICATED RADIUS (FT)
A) 15' (MINIMUM)	15
B) 20'	20
C) 25'	25
D) 30' (INTERMIDIATE)	30
E) 40'	40
F) 50' (INTERMIDIATE)	50
G) 60'	60
H) 75' (MAXIMUM)	75

2. CHECK AND RECORD READING ON BOOM ANGLE / DEGREES.

SPECIFICATION		INDICATED BOOM ANGLE (DEGREES)
1). MAXIMUM.	80 DEGREES	80
2). INTERMEDIATE.	60 DEGREES	60
3). INTERMEDIATE.	40 DEGREES	40
4). MINIMUM.	0 DEGREES	0

3. READING ON LOAD INDICATOR WITHOUT SLINGS OR LOAD / LBS. (LOAD BLOCK + WIRE ROPE)

ACTUAL		INDICATOR READ FREE LOAD, (LBS)
1). MAXIMUM RADIUS	LBS.	
2). MINIMUM RADIUS	LBS,	

4. CHECK AND RECORD ENGINE HIGH IDLE SPEED / RPM.

SPECIFICATION			INDICATED OF FUNCTIONAL (RPM)
1). IDLE SPEED	900	RPM	900
2). LOW SPEED	–	RPM	–
3). HIGH SPEED	2200	RPM	2200

5. FUNTIONALLY TEST THE FOLLOWING.

ACTUAL	INDICATED OF FUNCTIONAL (TESTED)
A) MAIN HOIST ANTI -TWO BLOCK.	function
B) AUXILIALY HOIST ANTI -TWO BLOCK.	function
C) HIGH BOOM ANGLE KICK OUT.	N/A
D) LOW BOOM ANGLE KICK OUT.	N/A
E) PRIME MOVER SHUTDOWN.	function
F) EMERGENCY SHUTDOWN.	function
G) ROTATE CRANE 360 LEFT.	Smoot
H) ROTATE CRANE 360 RIGHT.	Smoot

6. RECORD HYDRAULIC RELIEF VALVE PRESSURE SETTING ON FOLLOWING HYDRAULIC FUNCTION:

SPECIFICATION			INDICATED PRESSURE (PSI)
A) MAIN HOIST	3250	PSI.	3250
B) AUXILIALY HOIST	2950	PSI.	2950
C) BOOM HOIST	3000	PSI.	3000

TEST CONDUCTED BY: [redacted] POSITION : CR-Mech

CRANE OPERATOR : POSITION :

COMMENTS : DATE : 13 Aug 25

CRANE Mfg. : Nautilus
MODEL: 180B1-80 (HS)
SERIAL NUMBER:

LOCATION: SRWA

DATA BASE - PM JOB TASK CARD
WO: 1260071

Crew Size:
Estimated Hours:

SYSTEM	TASK		Specification	Record/Reading
Safety	Perform Job Safety Analysis (JSA)		Company Spec/Standard	✓ ( ) YES ( ) NO
	Obtain "COMPANY" PERMIT TO WORK		Company Spec/Standard	✓ ( ) YES ( ) NO
	Perform Tool Box Talk		Company Spec/Standard	✓ ( ) YES ( ) NO
	BEFORE/AFTER JOB EXECUTION: Ensure to comply with isolation procedure (LOCK OUT/TAG OUT, WARNING SIGNS and BARRIERS).		Company Spec/Standard	✓ ( ) YES ( ) NO
Required Tools	Insure proper tools are available at the job site		Company Spec/Standard	✓ ( ) YES ( ) NO
	Tool bag		Company Spec/Standard	✓ ( ) YES ( ) NO
	Tool box		Company Spec/Standard	✓ ( ) YES ( ) NO
	Tool Container		Company Spec/Standard	✓ ( ) YES ( ) NO
	MPI equipment and operator		Company Spec/Standard	( ) YES ✓ NO
	Check safety harness Software and Hardware should be good condition before use		Company Spec/Standard	✓ ( ) YES ( ) NO
	Check Rescue Equipment ready to use onsite		Company Spec/Standard	✓ ( ) YES ( ) NO
	Portable Scaffolding and Crew if require		Company Spec/Standard	✓ ( ) YES ( ) NO
Lubricants	Insure proper lubricants and consumables are available at the job site.		Company Spec/Standard	✓ ( ) YES ( ) NO
	Hydraulic System - Hydraulic Oil	Rando HD-68	OEM Manual	✓ ( ) YES ( ) NO
	Slew Gearbox - Gear Oil	Meropa 220	OEM Manual	✓ ( ) YES ( ) NO
	Auxiliary Hoist - Gear Oil	Meropa 220	OEM Manual	✓ ( ) YES ( ) NO
	Main Hoist - Gear Oil	Meropa 220	OEM Manual	✓ ( ) YES ( ) NO
	Grease Points - Lithium Based **IT MUST NOT INCLUDE MOLYBDENUM DISULPHIDE**	MULTIFAK EP#2	OEM Manual	✓ ( ) YES ( ) NO
	Open Gear Teeth - Open Gear Lube highly water resistant and of an adhesive nature.	OMEGA 73	OEM Manual	✓ ( ) YES ( ) NO
	Pneumatic Lubricator	SAE Grade 10	OEM Manual	( ) YES ✓ NO
	Wire rope Lubricant Company preferred grade	Birlube 70	OEM Manual	✓ ( ) YES ( ) NO
	Engine Oil - SAE Grade 15W-40 (Delo Gold)	15W-40	OEM Manual	✓ ( ) YES ( ) NO
	Safe Load Indicator fluid	W-15	OEM Manual	✓ ( ) YES ( ) NO
	Engine Radiator - Should have radiator preservatives additives	Cat® SCA	OEM Manual	✓ ( ) YES ( ) NO
Consumables	Spray Cold Galvanize		Company Spec/Standard	✓ ( ) YES ( ) NO
	Denso Tape		Company Spec/Standard	✓ ( ) YES ( ) NO
	WD-40		Company Spec/Standard	✓ ( ) YES ( ) NO
History Review	Before starting work, tasks preparation at least 1 day prior to starting work: 1. Review history PM/ CM from Roving Team, 2. Review last PM/ CM/ PMI from Crane Mech, 3. List out all punch list and prepare parts. 4. Review last Certificate task performed		API RP 2D	✓ ( ) YES ( ) NO
	Require to update part history from Crane Mech on following main compenents to ensure the right parts are prepared: - Aux/ Main/ Boom Cylinder, Engine, Swing Gearbox, etc. Reference: Crane OEM information of each part need to be recorded - Manufacturer & Contact info - Model & serial number - Installation date		Company Spec/Standard	✓ ( ) YES ( ) NO
	Review history data from Certificates and incorporate into current PM: - Pull Test Certificates (ongoing update, 4 yr. history). - Load Test Certificates (ongoing update, 4 yr. history). - Wire Rope Certifications (running rope and standing rope) (life of rope). - Hoist Certifications for hoist classified as "personnel handling" hoist.		API RP 2D	✓ ( ) YES ( ) NO
	Review Last Preventative Maintenance Records (Inspection Reports) - Pre-use (Pre-Post Inspection) - 6 Monthly (API RP 2D Not Defined, Company Standard) - 1 Yearly (API RP 2D Defined Annual Inspection)		API RP 2D	✓ ( ) YES ( ) NO
Lifting Gear Preparation	Visually Inspect (Sling, sling hooks and shackles) include Websling / Chain		Company Spec/Standard	✓ ( ) YES ( ) NO
	Check color code / Tag & date inspection		Company Spec/Standard	✓ ( ) YES ( ) NO
General	Determine if access route to-from crane is clean, safe, unobstructed and adequately protected against falls, tripping and slipping		Company Spec/Standard	✓ ( ) YES ( ) NO
	Check drain lines and drip pans for deterioration		API RP 2D	✓ ( ) YES ( ) NO
	Remove any sediment collected in the bottom of drip pans		Industry Standard	✓ ( ) YES ( ) NO
	Check for general crane and components for loss of protective coating and corrosion		Industry Standard	✓ ( ) YES ( ) NO
	Check for missing or loose ,corrosion, deformation pins, pin keepers, bolts, nuts, fasteners of all laders, cages and working platform		API RP 2D	✓ ( ) YES ( ) NO
	Apply grease to exposed grease parts (control valve spools, ball-ring gear, parking brake valve, etc.)		OEM Manual	✓ ( ) YES ( ) NO
Prime Mover	Engine CUMMIN		OEM Manual	✓ ( ) YES ( ) NO
	CUMMIN Model : C8.3	S/N.:	OEM Manual	73451629
		AR.No.:	OEM Manual	—
	Change engine lube oil & oil filter and check the condition of old oil. As found : Normal		OEM Manual	✓ ( ) YES ( ) NO
	Check diesel tank level, top up if required.		OEM Manual	✓ ( ) YES ( ) NO
	Check / Clean crankcase breather cap. Change if required		OEM Manual	✓ ( ) YES ( ) NO
	Check / Clean air cleaner filter. Replace if require. (Note : Include inspect air cleaner housing)		OEM Manual	✓ ( ) YES ( ) NO
	Check condition and inspect of the radiator and cap.		OEM Manual	✓ ( ) YES ( ) NO
	Check for any signs of leaks on or around the engine ie; Crankshaft seal for front & rear seal , Engine oil cooler. As found: Normal		OEM Manual	✓ ( ) YES ( ) NO
	Check condition exhaust system for leaks, corrosion, insulation and general. As found : Normal		OEM Manual	✓ ( ) YES ( ) NO
	Check condition of all engie hoses and tube. (Fuel supply,Cooling system and Lube oil system. As found: Normal		OEM Manual	✓ ( ) YES ( ) NO
	Drain water and sediment form diesel tank. As found : A little contaminated		OEM Manual	✓ ( ) YES ( ) NO
	Check / Clean Diesel tank level sightglass and diesel tag.		OEM Manual	✓ ( ) YES ( ) NO
	Apply grease of fan bearing/shaft.		OEM Manual	✓ ( ) YES ( ) NO
	Check that neither the top nor bottom tensioner arm stop is touching the cast boss on the tensioner body for CUMMINS engine as picture		OEM Manual	✓ ( ) YES ( ) NO
	Change water coolant and check condition base of water coolant and record PH.		OEM Manual	✓ ( ) YES ( ) NO
	COOLANT PARAMETERS (PH):	6 or higher	OEM Manual	PH = 7
	HOUR METER PARAMETERS:	LAST READING ____ HRS	OEM Manual	290 HRS

[redacted] / 11 Nov 25

SYSTEM	TASK	Specification	Record/Reading
	Check and retigthen the bolts of all engine base. / Inspection mouting rubber. As found ; Normal	OEM Manual	(✓) YES ( ) NO
	Inspect the engine fan blades that there is a break is it severely distorted or rusted. As found ; Normal	OEM Manual	(✓) YES ( ) NO
	Check condition fan blade and guard cover.	OEM Manual	(✓) YES ( ) NO
	Check engine HYD starter drive gear bendix and fly wheel gear teeth condition and record. **Replace if required*	OEM Manual	(✓) YES ( ) NO Bendix Gear: 90 % Fly wheel Gear: 90 %
	Check and inspect condition the Bendix of hydraulic Starter motor.	OEM Manual	(✓) YES ( ) NO
	Lubricate and check engine throttle system.	OEM Manual	(✓) YES ( ) NO
	Determine if the tachometer operates properly: Record Value of Idle & Max Speed (RPMs) Note: Too low idle (RPMS) will cause excessive worn at winch brake	OEM Manual	
	ENGINE RPM SPECIFIC — IDLE/LOW SPEED — 900-1000 RPM	OEM Manual	900 RPM
	ENGINE RPM SPECIFIC — MAX SPEED — 2200 RPM	OEM Manual	2200 RPM
	Confirm engine oil pressure as per Parameters below and Record Value:	OEM Manual	
	ENGINE OIL PRESSURE SPECIFIC — Minimum — Not lower then 10 PSI	OEM Manual	25 PSI
	ENGINE OIL PRESSURE SPECIFIC — Maximum — 70 PSI	OEM Manual	70 PSI
	Confirm engine fuel pressure Parameters are correct and Record Value:	OEM Manual	
	ENGINE FUEL PRESSURE SPECIFIC** — Normal — Not lower then 18 PSI	OEM Manual	(✓) YES ( ) NO As found 25 PSI
	Confirm engine temperature Parameters and Record Value:	OEM Manual	
	ENGINE WATER TEMP SPECIFIC — NORMAL — 158-195 F	OEM Manual	170 F
	Test engine SAFETY DEVICE- ensure engine kill cable shuts off FUEL supply	API RP 2D	(✓) Function ( ) False
	Test engine SAFETY DEVICE- ensure EMERGENCY KILL CABLE - shuts off AIR supply	API RP 2D	(✓) Function ( ) False
	Test engine SAFETY DEVICE- ensure ENGINE low lube oil - releases OIL PRESSURE to ctivate Alarm Air System ****Note*** Engine oil pressure low alarm at 20 PSI*	Company Spec/Standard	(✓) Function ( ) False
	Test engine SAFETY DEVICE- ensure HIGH TEMP - releases OIL PRESSURE to activate Alarm Air System	Company Spec/Standard	(✓) Function ( ) False
	Check and clean up the water separator filter.	OEM Manual	(✓) YES ( ) NO
	Check the general conditionand functioning of turbocharger. Note:	OEM Manual	( ) Leak (✓) Not Leak
	Change fuel filter and inspect the primary hand pump.	OEM Manual	(✓) YES ( ) NO
	Check water temperator regulator.(Thermostat). Change if require refer from cooling temperature.	OEM Manual	(✓) YES ( ) NO
	Change corrosion resistor(water filter)	OEM Manual	(✓) YES ( ) NO
	Check or adjust the engine valve lash. (Intake vale = 0.012", Exhaust valve =0.022 ")	OEM Manual	(✓) YES ( ) NO ( ) N/A
	Check condition wear of pump drive spline and record ***Note; Remaining 70% of Original Spline Surface must be replace.*	Company Spec/Standard	90 % Remaining
	Check condition wear of adaptor Coulping spline shaft and record ***Note; Remaining 70% of Original adaptor Coulping spline shaft Surface must be replace.*	Company Spec/Standard	90 % Remaining
	Check condition wear of Coulping spline and record. Re-tigthen of all lock bolts. ***Note; Remaining 70% of Original adaptor Coulping spline shaft Surface must be replace.*	Company Spec/Standard	90 % Remaining
Hydraulic Start System (Apply for C2-Remote P/F Only)	**Check pressure system** at the pressure gauge which should reach 3,000 PSI as standard when the system is FULLY charged. Record Value. (As the system cools down, the pressure should drop slightly and finally stabilised.)	OEM Manual	(✓) YES ( ) NO
	Visually inspect all hydraulic connections and hoses for leaks and retighten if necessary. (Caution: This should NOT be done if the system is under pressure.) 1. Slowly release system pressure by loosening the bleed screw on top of the hand pump. 2. Ensure no pressure remains, retighten the suspected leak fitting or replace the damaged hose or component. 3. Retighten the bleed screw on the hand pump. 4. Pump the system up to 2200 - 2600 PSI 5. Inspect that the leak was eliminated.	OEM Manual	(✓) YES ( ) NO
	Function check Accumulator Pre-charge. (Caution: This should NOT be done if the system is under pressure.) 1. Shut the engine off, release system pressure via the bleed screw on top of the hand pump 2. Retighten bleed screw and actuate the hand pump. The pressure will rapidly increase and then stabilised. This pressure is related to accumulator gas pre-charge pressure. 4. If the pressure rapidly increase to 3000 PSI, it indicates that the accumulator has lost its gas charge. 5. Troubleshoot as necessary	OEM Manual	(✓) YES ( ) NO
	Check function rechaging system by function boom down while the engine running. 1. The crane engine is running at 1,000-1500 RPM. 2. Slowly control lever boom function down for charging pressure to accumulator. 3. This pressure should read on prssure gauge between 2200 - 2600 PSI depending on the recharge ratio 80% std. (90% optional). Record Pressure Value.	OEM Manual	2500 PSI
	Check Nitrogen pressure in Accumulator ***Note**spec @ 1,500 psi as follow schematic and if found pressure loss below 1400 PSI then prepare recharge nitrogen in system	OEM Manual	1500 PSI
	Every 36 months or 2000 engine running hours (approximately 1500 starts) replace the high pressure filter.	OEM Manual	(✓) YES ( ) NO
Pneumatic System	Check for noisy compressor operation, which could indicate a worn drive gear coupling, a loose pulley or excessive internal wear	OEM Manual	(✓) YES ( ) NO
	Check Air Compressor external oil supply and return lines, if applicable, for kinks, bends, or restrictionsto flow	OEM Manual	(✓) YES ( ) NO
	Inspect the Air compressor discharge port, inlet cavity and discharge line for evidence of restrictions and carboning. (If excessive buildup is noted)	OEM Manual	(✓) YES ( ) NO
	Check all hose connections are sound and all mounting and pivoting connections are secure.	OEM Manual	(✓) YES ( ) NO
	Check condition / Clean and lubricate unloading valve	OEM Manual	(✓) YES ( ) NO
	Check proper air pressure is available for the system. Record Value.	OEM Manual	
	AIR SYSTEM PARAMETERS: — MAX 60 PSI	OEM Manual	60 PSI
	Visually inspection condition of air receiver for signs of corrosion or loose of structural integrity.	Industry Standard	(✓) YES ( ) NO
	Check the hose, piping and tubing for mechanical damage, corrosion, splits, blisters, cracking or excessive abrasion on the outer surface	Industry Standard	(✓) YES ( ) NO
	Drain off air filter and reciever to remove condensed water. If water is present, drain until water is removed.	Industry Standard	(✓) YES ( ) NO
	Check proper operation of pop off valve, by manually functioning valve.	Industry Standard	(✓) YES ( ) NO
	Check proper operation of manual latch valve, by manually functioning latch.	Industry Standard	(✓) YES ( ) NO
	Check proper operation of small engine alarm horn.	Industry Standard	(✓) YES ( ) NO

[redacted] / 11 Nov 25

SYSTEM	TASK		Specification	Record/Reading
Hoist / Brakes	Visually check a hoist exhibits erratic operation and/or unusual noise, the hoist must be taken out of service until it is inspected and serviced by a qualified technician. Continued operation of a hoist with a defect in a critical component may lead to loss of load control, property damage, serious injury or death.		OEM Manual	(✓) YES ( ) NO
	Visual exteriors of hoist, frames, drums and flanges for damage, leaks, cracks and wear and repair/replace as required to maintain the structural integrity of the hoist.		OEM Manual	(✓) YES ( ) NO
	Check all hoist mounting pins, bolts or other fasteners and replace or tighten as necessary.		OEM Manual	(✓) YES ( ) NO
	Lubricant level must be maintained between the minimum and maximum levels; midway up sight glass or at bottom of level plug port as equipped and check/clean plug vent. Use only the recommended type of lubricant.		OEM Manual	(✓) YES ( ) NO
	Inspect Brake Valve Opening Pressure test V/V 1-1/4" PD Series : no lower than 550 PSI V/V 1-1/2" CH Series : no lower than 575 PSI	Main	Braden Bulletin 527-Dec,1996	600 PSI
		Aux		450 PSI
	Inspect Brake cylinder opening pressure test. CH/PD Series : 400-450 PSI.	Main	Industry Standard	150 PSI
		Aux		500 PSI
	Measure differancian of static and dynamic brake. CH/PD Series : 150-250 PSI.	Main	Industry Standard	250 PSI
		Aux		150 PSI
	Check for external oil leaks and repair as necessary. This is extremely important due to the accelerated wear that will result from insufficient lubricating oil in the hoist.		OEM Manual	(✓) YES ( ) NO
	RECORD BOOM CYLINDER INFORMATION :	Boom cylinder Diameter:	OEM Manual	DIA: 12 Inch
		CY Number:	OEM Manual	L= 8102-20 R= 8102-21
		Serial Number:	OEM Manual	L= 8131 R= 8132
	RECORD MAIN HOIST INFORMATION :	Manufacturer:	OEM Manual	Braden
		Model:	OEM Manual	CH175A-23040-02-1
		Serial Number:	OEM Manual	0509090
	Check MAIN HOIST for proper operation and good condition		API RP 2D	(✓) YES ( ) NO
	Brake test & record pressure of MAIN HOIST.		OEM Manual	(✓) YES ( ) NO As found: In the standard
	Change main hoist gear oil and inspect for small particles in the old oil. ** Refer to Onsite Gear Oil Sample Procedure ** ** Replace and send oil sample to SKL if abnormal ** ** Take photo of Oil Sampling for Reference**		OEM Manual	(✓) YES ( ) NO As found: Not contaminated
	RECORD AUXILIARY HOIST INFORMATION :	Manufacturer:	OEM Manual	Braden
		Model:	OEM Manual	PD12C-29044-04-1
		Serial Number:	OEM Manual	0507808
	Check AUXILIARY HOIST for proper operation and good condition		API RP 2D	(✓) YES ( ) NO
	Brake test & record pressure of AUXILIARY HOIST		API RP 2D	(✓) YES ( ) NO
	Change Aux. hoist gear oil and inspect for small particles in the old oil. ** Refer to Onsite Gear Oil Sample Procedure ** ** Replace and send oil sample to SKL if abnormal ** ** Take photo of Oil Sampling for Reference** Please record if any abnormal condition. Note.....		OEM Manual	( ) SEND SKL LAB (✓) NOT SEND SKL LAB
	Check pressre relief Valve: Determine hoistes' relief valve pressure gauge is working and giving accurate measurement by notice whether pressure gauge is vibrating or not. If not, set relief valve pressure in accordance with the schematic and parameters below. Record all readings.		OEM Manual	(✓) YES ( ) NO
	BOOM RELIEF VALVE TEST	Relief Specific: 3,000 PSI	OEM Manual	3000 PSI
	MAIN HOIST RELIEF VALVE TEST	Relief Specific: 3,250 PSI	OEM Manual	3250 PSI
	AUX HOIST RELIEF VALVE TEST	Relief Specific: 2,950 PSI	OEM Manual	2950 PSI
	SWING RELIEF VALVE TEST	Relief Specific: 1,500 PSI	OEM Manual	1500 PSI
	Measure Pressure of hoist motor case drains and Record Value Reference Bulletin: BRADEN Inspection, Testing, Preventive Maintenance and Special Operating Instructions For Planetary Hoists PB-308 latest edition for further details.		OEM Manual	
	MAIN HOIST CASE DRAIN for Gear Motor (Down Mode).	PRESSURE < 100 psi	Company Spec/Standard	5 PSI
	AUX. HOIST CASE DRAIN for Gear Motor (Down Mode).	PRESSURE < 100 psi	Company Spec/Standard	5 PSI
Hydraulic System	Check hydraulic tank oil level. Oil should be visible in the sight glass. Top up as required (3/4 Tank Minimum)		OEM Manual	(✓) YES ( ) NO
	Check hydraulic oil condition. (Check if running hours are more than 100 hours from last oil change or during Annual inspection) ** Refer to Onsite Hydraulic Oil Sample Procedure ** ** Replace and send oil sample to SKL if abnormal ** ** Take photo of Oil Sampling for Reference**	Rando HD-68	Company Spec/Standard	( ) SEND SKL LAB (✓) NOT SEND SKL LAB
	Inspect hydraulic tank and strainer filter. Change hydraulic oil. If required with lab confirmation.		Company Spec/Standard	(✓) YES ( ) NO
Hydraulic System	Drain off 1 liter of oil to remove condensed water. If water is present, drain until water is removed and top up with clean oil		Industry Standard	(✓) YES ( ) NO
	Check for any hydraulic leaks		Industry Standard	(✓) YES ( ) NO
	Check the hydraulic hose, piping and tubing for mechanical damage, corrosion, splits, blisters, cracking or excessive abrasion on the outer surface		API RP 2D	(✓) YES ( ) NO
	Check that all hydraulic hose connections are sound and that all mounting and pivoting connections are secure.		Industry Standard	(✓) YES ( ) NO
	Lubricate hydraulic swivel in pedestal and insure tie down restrains are in place and preventing the swivel from rotating with the crane structure.		OEM Manual	(✓) YES ( ) NO
	Ensure the filter breather on tank is not covered or clogged		Industry Standard	(✓) YES ( ) NO
	Visually inspect for missing or loose pins, pin keepers, bolts, nuts, fasteners on all pumps, motors and valves		API RP 2D	(✓) YES ( ) NO
	* Re-tighten the stud bolt of hydraulic main pump and marking the nut for checking to prevent loosening. Note : Torqe spec model P76, P75, PGP/PGM350 ,PGP/PGM330 = 200 ft-lbs. , for model PGP/PGM315 = 140 ft-lbs. and PGP/PGM365 = 450 ft-lbs.		The Commercial Intertech manual	(✓) YES ( ) NO
	Check the filter bypass indicator, while engine is running		OEM Manual	(✓) YES ( ) NO
	With engine running (after all other items pass inspection), check the system for leaks around fittings, hoses, valves and reservoirs		Industry Standard	(✓) YES ( ) NO
	With engine running, check the source of any unusual noise or vibration that may cause or indicate equipment damage or wear		Industry Standard	(✓) YES ( ) NO
	Ensure all hoses are properly rated for the system, see "Parameters" for each system for details.		Industry Standard	(✓) YES ( ) NO
	Record hydraulic oil operating temperture. Note: Hydraulic fluid overheating temperature is over 180 F degrees or 82 C, degrees (reservoir temperature)		Industry Standard	130 Degree F

[redacted] / 11, Nov 25

SYSTEM	TASK				Specification	Record/Reading
	Determine if hydraulic return pressure gauge is working and giving accurate measurements. Record readings					
	RECORD HYDRAULIC RETURN PRESSURE PARAMETERS:			60 PSI "maximum"	OEM Manual	60 PSI
	Check and inspect the hydraulic return filters and seals.				OEM Manual	✓) YES ( ) NO
	Function Testing and record pressures with engine at :			2,200 RPM	API RP 2D	
	BOOM FUNCTION TEST (Need Crane Mech to verify each platform)				OEM Manual	
	Boom Angle : 60 Degree (Recommend or as applicable)	UP	Cracking pressure	RECORD	OEM Manual	400 PSI
			Full Speed Pressure	RECORD	OEM Manual	800 PSI
		DOWN	Cracking pressure	RECORD	OEM Manual	500 PSI
			Full Speed Pressure	RECORD	OEM Manual	1400 PSI
	MAIN HOIST FUNCTION TEST (Need Crane Mech to verify each platform)				OEM Manual	
	Boom Angle : 60 Degree (Recommend or as applicable)	UP	Cracking pressure	RECORD	OEM Manual	100 PSI
			Full Speed Pressure	RECORD	OEM Manual	600 PSI
		DOWN	Cracking pressure	RECORD	OEM Manual	600 PSI
			Full Speed Pressure	RECORD	OEM Manual	1200 PSI
	AUX HOIST FUNCTION TEST (Need Crane Mech to verify each platform)				OEM Manual	
	Boom Angle : 60 Degree (Recommend or as applicable)	UP	Cracking pressure	RECORD	OEM Manual	100 PSI
			Full Speed Pressure	RECORD	OEM Manual	500 PSI
		DOWN	Cracking pressure	RECORD	OEM Manual	500 PSI
			Full Speed Pressure	RECORD	OEM Manual	1400 PSI
	SWING FUNCTION TEST (Need Crane Mech to verify each platform)				OEM Manual	
	Boom Angle : 60 Degree (Recommend or as applicable)	LEFT	Cracking pressure	RECORD	OEM Manual	100 PSI
			Full Speed Pressure	RECORD	OEM Manual	500 PSI
		RIGHT	Cracking pressure	RECORD	OEM Manual	100 PSI
			Full Speed Pressure	RECORD	OEM Manual	500 PSI
Electrical system, Crane Boom Lighting and red obstruction light	Check the electrical junction boxes, wires and connections for deterioration, desiccant bags, (replace as required)				Industry Standard	✓) YES ( ) NO
	Check the condition of the grounding and lighting protection system.				Company Spec/Standard	✓) YES ( ) NO
	Visually inspect boom floodlight and light guards for loose, missing, corroded				Company Spec/Standard	✓) YES ( ) NO
	Check condition pipe support , U-bolt ,nuts of boom floodlight and Electric slipring for loose , missing , corroded				Company Spec/Standard	✓) YES ( ) NO
	Check Electric slipring/swivel for 360° continuous rotation				OEM Munnal	✓) YES ( ) NO
	Check Water ingress, condensation in electric slipring, red obstruction light and boom floodlight				OEM Munnal	✓) YES ( ) NO
	Check feely movement and lubricate of boom floodlight				OEM Munnal	✓) YES ( ) NO
	With generator in operation, intergize all lights to unsure proper function.				API RP 2D	✓) YES ( ) NO
	Check condition of crane boom lighting and safety net is secured with strong point. * **Safety net should be replace 24 months after installation (2 year)***			Last installation date _____	Company Spec/Standard	✓) YES ( ) NO
	Check function of crane sound signal				Company Spec/Standard	( ) YES ✓) NO ( ) N/A
	Check function of crane boom lighting at boom upper section				Company Spec/Standard	✓) YES ( ) NO ( ) N/A
	Check function of crane boom lighting at boom lower section				Company Spec/Standard	✓) YES ( ) NO ( ) N/A
	Check function of crane boom lighting at winch skid				Company Spec/Standard	✓) YES ( ) NO ( ) N/A
	Check function of crane boom lighting at crane cabin				Company Spec/Standard	✓) YES ( ) NO ( ) N/A
	Check function becon light at boom tip				Company Spec/Standard	✓) YES ( ) NO ( ) N/A
	Inspection wire rope guide & Roller assembly				Company Spec/Standard	✓) YES ( ) NO
	Visually inspect red obstruction light pipe support, u-bolts, nuts connection to hand rail for loose, missing, corroded				Company Spec/Standard	✓) YES ( ) NO
	Visually inspect safety sling attached to the red obsruction light and its base for loose, missing, corroded				Company Spec/Standard	✓) YES ( ) NO
	Visually inspect red obstruction light function. The light is designed to turn on all the time.				Company Spec/Standard	✓) YES ( ) NO
Operator Control Station	Check general condition of control panel, bolts, paint security, etc.				API RP 2D	✓) YES ( ) NO
	Determine if there is a serviceable fire extinguisher in the vicinity of the crane				Company Spec/Standard	✓) YES ( ) NO
	Determine if correct load chart is in use and easily visible for operator				API RP 2D	✓) YES ( ) NO
	Determine if charts, indicators and hand signal chart are in the cabling and firmly attached				API RP 2D	✓) YES ( ) NO
	Determine if angle/radius indicator plate is easily visible to operator and is moving freely.				API RP 2D	✓) YES ( ) NO
	Check condition of control levers and determine if they "dead-man" back to the neutral position.				API RP 2D	✓) YES ( ) NO
	Check condition of pressure gauges.				API RP 2D	✓) YES ( ) NO
	Check proper control labels are firmly installed, completely legible and properly labeled				API RP 2D	✓) YES ( ) NO
	Check controls for freedom-of-movement				API RP 2D	✓) YES ( ) NO
	Check condition , Leak, freely moement of Dynamic swing break system *** Note; If HYD Oil loose in CYD reservoir must be refill*				OEM Manual	✓) YES ( ) NO
	Check condition , Leak, freely moement of Accelerate System *** Note; If HYD Oil loose in CYD reservoir must be refill*				OEM Manual	✓) YES ( ) NO
	Check all safety glass and rubber seal for proper condition				API RP 2D	✓) YES ( ) NO ( ) N/A
	Function Test Horn. Note;.....Good.....				Industry Standard	✓) YES ( ) NO ( ) N/A
	Ensure PRE/POST Check List and Pocket Manual in the cabin. Note;.....have.....				Company Standard	✓) YES ( ) NO ( ) N/A
Load Indicator System	Visual check on fittings and connections for leaks. Fix leak if any. Note:..Normal.....				OEM Manual	✓) YES ( ) NO
	Should any leaks exist, stop leak and recharge system, refer to maintenance manual				OEM Manual	✓) YES ( ) NO
	Change and flushing Load cell fluid.				OEM Manual	✓) YES ( ) NO
	Check general condition of tubbing, hoses, pins bolts, paint, etc.				Industry Standard	✓) YES ( ) NO

[redacted] / 14 Nov 25

SYSTEM	TASK	Specification	Record/Reading
	Insure load cell is free of obstructions	OEM Manual	✓ YES ( ) NO
	Check condition of gauge(s) face and clean glass as required.	OEM Manual	✓ YES ( ) NO
	Check the scale's operation and weighing accuracy. (Main Hoist) Remark: Maximum variance +/- 2% Note: Good	Company Spec/Standard	✓ YES ( ) NO ( ) N/A
	Check the scale's operation and weighing accuracy. (Aux. Hoist) Remark: Maximum variance +/- 2% Note: Good	Company Spec/Standard	✓ YES ( ) NO ( ) N/A
	Check the internal casting fluid of weight indicator. top up if required	Industry Standard	✓ YES ( ) NO ( ) N/A
	Insure SWL tag matches ratings on the Crane Load Chart.	OEM Manual	✓ YES ( ) NO ( ) N/A
	Insure Boom Length, matches the Crane Load Chart	OEM Manual	✓ YES ( ) NO ( ) N/A
	Insure Boom Angle measurements and readings match the boom angle indicator.	OEM Manual	✓ YES ( ) NO ( ) N/A
	Insure Boom Radius measurements indicate the distance from center line of the crane to the hook	OEM Manual	✓ YES ( ) NO ( ) N/A
	Check Main load cell gap 1/4 (0.250) inch	OEM Manual	✓ YES ( ) NO ( ) N/A
	Check Aux load cell gap 3/8(0.380) inch (Compression Load Cell Type)	OEM Manual	✓ YES ( ) NO ( ) N/A
Pedestal & Structure	Visually check **Pedestal** for chipped/cracked paint, deformation, worn parts, dents, corroded areas, cracks weld, etc.	API RP 2D	✓ YES ( ) NO
	Check water rain drain at pedestal must be not obstuct	Industry Standard	✓ YES ( ) NO
	Check pin and cotter pin of pedestal missing , corrosion, wear, damage and exercise pin.	Industry Standard	✓ YES ( ) NO
	Visually check **Base - Plate connection and Base hoist Structure** for chipped/cracked paint, deformation, worn parts, dents, corroded areas, cracks weld, etc.	API RP 2D	✓ YES ( ) NO
	Check A fixed such as Handrial, Walkway, Grating, stationary structure without significant movement in response to waves and currents in normal operating conditions.	API RP 2C	✓ YES ( ) NO
	Visually check and lubricate maintenance jib. ***Note*** If on pedestal crane	OEM Manual	✓ YES ( ) NO ( ) N/A
	Check maintenance jib is secure firmly. ***Note*** If on pedestal crane	OEM Manual	( ) YES ( ) NO ( ) N/A
Box Boom & Luffing CYD	Check and Verify entire box boom and Boom CYD for loss of protective coating and corrosion. Note:	API RP 2D	( ) YES ( ) NO
	Check and Verify entire box boom and Boom CYD for chipped/cracked paint, deformation, worn parts, dents, corroded areas, cracks, etc. Note:	API RP 2D	✓ YES ( ) NO
	Check and Verify boom end connections, for bends, dents, corroded areas, cracked welds, and signs of mechanical damage, wear, etc. **any deviation should be reported**	API RP 2D	✓ YES ( ) NO
	Check and Verify boom rest and wooden support to ensure it's in good condition	API RP 2D	✓ YES ( ) NO
	Inspect pin and pin holes of Upper tank and Lower tank for excessive clearance	OEM Manual	✓ YES ( ) NO
	BOOM CYLINDER PIN MAXIMUM TOLERANCE — 0.125 Inch (3mm)	Industry Standard	As found Normal
	Check BOOM CYLINDERS for proper operation and good condition	API RP 2D	✓ YES ( ) NO
	Check Boom cylinder barrels and rods for leaks, mechanical damage and corrosion	Industry Standard	✓ YES ( ) NO
	Check and measurement boom foot pin and connection pins for clearance	Industry Standard	✓ YES ( ) NO
	BOOM FOOT PINS & BOOM BOX CONNECTER PIN TOLERANCE — 0.125 Inch (3mm)	Industry Standard	
	Boom Foot Pin Tolerance	Industry Standard	0.025 inch
	Boom Box Connecter Pin Tolerance	Industry Standard	0.025 inch
	Check connecting bolts of box boom loose, corrosion, wear, damage	OEM Manual	✓ YES ( ) NO
	Lubricate boom foot pins and bushings	OEM Manual	✓ YES ( ) NO
	Lubricate boom cylinder pins, bearings and bushings	OEM Manual	✓ YES ( ) NO
	Boom function test angle/radius to correction **Note; The cylinder(s) mechanism shall be capable of elevating the boom from a minimum of zero degrees to the maximum recommended boom angle.	API RP 2C	✓ YES ( ) NO
	Operation functional test and verify Boom Creeping down **Note; Test at angle 60°	Industry Standard	✓ YES ( ) NO As found Normal
Wire Rope	Determine if parts-of-line match parts of line on the load chart in the crane cabin.	API RP 2D	✓ YES ( ) NO
	Determine if visible portion of wire rope adequately lubricated. If not lubricate wire rope	API RP 2D	✓ YES ( ) NO
	For each layer of wire rope on drum, check that all rope is parallel and each crossover point at hoist flanges is correct	API RP 2D	✓ YES ( ) NO
	The top layer of rope must not be lower to the flange tips 2.5 in for Smooth drum,2 in for groove drum or 2.5 times of wire rope diameter	API RP 2C	✓ YES ( ) NO
	Inspect wire rope for, kinking, crushing, broken wires, necking down of rope diameter, worn outside wires, corroded or broken wires at end connection, cutting or unstringing.	API RP 2D	✓ YES ( ) NO As found Normal
	NoteRunning Ropes of rotation-resistant construction used in the main or auxiliary Hoist: - Four (4) Randomly distributed broken wires within 30 rope diameter - Two (2) broken wires in one strand within 6 rope diameter	API RP2D Edition 7	✓ YES ( ) NO As found Normal
	One valley break can indicate internal rope damage requiring close inspection of this section of the rope. When one or more valley breaks are found in one lay length the rope should be retired.	API RP2D Edition 7	✓ YES ( ) NO As found Normal
	Reductions for the rope diameter, from initial wire rope dimensional measurements, in a nonworking area (an area away from the sheaves) compared to the lowest diameter of rope measured in three working areas (areas where the rope regularly goes over a sheave) of more than the following is observed: — 3/64 in. (0.047 in.) (1.2 mm) for diameters up to and including 3/4 in. (19.1 mm); — 1/16 in. (0.062 in.) (1.6 mm) for diameters of 7/8 in. to 1-1/8 in. (22.2 mm to 28.6 mm); — 3/32 in. (0.093 in.) (0.8 mm) for diameter of 1-1/4 in. to 1-1/2 in. (31.8 mm to 38.1 mm); — For rope diameters greater than 1-1/2 in., a 5 % diameter loss from baseline measurement. — Wear of one-third the original diameter of the outside individual wires.	API RP2D Edition 7	✓ YES ( ) NO As found dimension Normal
	Increase in the length of an individual rope lay is observed. This increase in lay length and accompanying reduction in diameter can be caused by failure of the core. This can occur more readily in ropes or rotation-resistant construction.	API RP2D Edition 7	✓ YES ( ) NO As found Normal
	-Inspection and Verify running and standing rope from heat effect **Note; Not more than 250°C -There is evidence of heat damage from any source (i.e. engine exhaust, flare towers, stress corrosion cracking, etc.). Heat can be generated by passing a rope over a frozen or non-turning sheave, contact with structural members of the crane, improperly grounded welding leads or lightning strikes	Industry Standard	✓ YES ( ) NO As found Normal
	With the boom at the highest possible angle and the main load block or overhaul ball at the water level, ensure there is a minimum of 5 wraps of wire-rope remaining on the drums. Note: (Thai law, requires minimum of 2 wraps)	API SPEC 2C / Thai Law	✓ YES ( ) NO
	Reference: - Running rope safety factor not less than 6 for wire rope that are running wire. (Thai Law; Wire rope nominal breaking strength x number parts of line / Design factor 6) - Standing rope safety factor not less than 3.5 for wire rope that are stay cables, (Thai law)	Thai Law	✓ YES ( ) NO ( ) N/A
	Measure and record nominal diameter of "running ropes"main and auxiliary (particularly on drum, equalizer sheave and at sockets, clips and dead end points) *****Nominal = several measurements added together divided by Number of measurements*****	API RP 2D	✓ YES ( ) NO
	Inspect wire rope and record dimension.	API RP 2D	

[redacted] / 11 Nov 25

SYSTEM	TASK		Specification	Record/Reading
	MAIN WIRE ROPE OD:	FULL DRUM	OEM Manual	0.645 Inch
		HALF DRUM	OEM Manual	0.640 Inch
		WATER LEVEL	OEM Manual	0.645 Inch
	AUX WIRE ROPE OD:	FULL DRUM	OEM Manual	0.642 Inch
		HALF DRUM	OEM Manual	0.645 Inch
		WATER LEVEL	OEM Manual	0.640 Inch
	Slip-Cut 1 meter of all ropes at the wedge socket and re-wedge to prevent rust inside of wedge socket (at outward end of rope, not on hoist drum) Dead end tail length is never less than 6 inches, or: - Standard 6 to 8 Strand wire rope is not less than 7 times the rope diameter - Rotation Resistant Wire Rope is not less than 20 times the rope diameter		Company Spec/Standard	(✓) YES ( ) NO
	U-bolt and Fist Grip Clips: Extreme care should be exercised to assure proper orientation of U-bolt clips. The U-bolt segment shall be in contact with the wire rope dead-end. The orientation, spacing, torquing, and number of all clips shall be in accordance with the crane manufacture's specifications.		API SPEC 2C	(✓) YES ( ) NO
	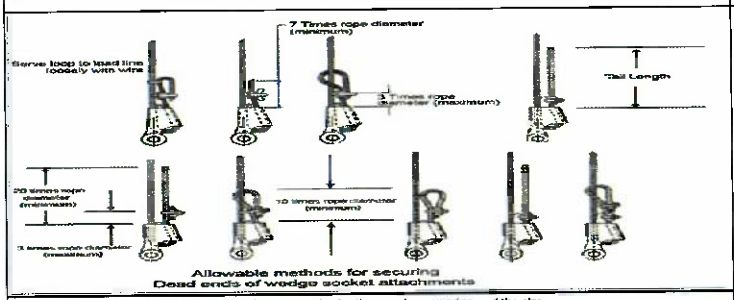 Allowable methods for securing Dead ends of wedge socket attachments		API SPEC 2C	Model ans Size wedge socket. Main hoist. Model..... Size.....5 1/8..... Aux.Hoist. Model..... Size.....5 1/8.....
	Verify that the wedge socket and wedge are the correct size for the rope in use and record the size		API SPEC 2C	(✓) YES ( ) NO
Sheaves & Bearings	Lubricate all sheave bearings.		API RP 2D	(✓) YES ( ) NO
	Visually inspect all sheaves and bushings for cracks, wear and deterioration		API RP 2D	(✓) YES ( ) NO As found.....Normal.....
	Visually inspect wire rope track of sheave for rope imprints, wear and deterioration. If damage exist sheave should be resurfaced or replaced.		API RP 2D	(✓) YES ( ) NO As found.....Normal.....
	Pins retained by snap rings, bolt lock shafts, plates lock should be checked for missing or loose for all		API RP 2D	(✓) YES ( ) NO
	Check wirerope guards and keepers for proper location and condition.		API RP 2D	(✓) YES ( ) NO
	Determine if wire rope is jumping the sheaves, by looking for signs of damage on the sheave brim		Industry Standard	(✓) YES ( ) NO
	Sheave Rope Profile for optimum Rope life the sheave groove profile should be correctly matched to the rope diameter		Industry Standard	(✓) YES ( ) NO
	Check rope sheave should be machine grooved to adepth of not less than 1.5 times the norminal diameter of the rope		Industry Standard	(✓) YES ( ) NO
	MAIN POINT SHEAVES: Note;.....		Industry Standard	No.1 (✓) YES ( ) NO No.2 (✓) YES ( ) NO
	AUX SHEAVES: Note;.....		Industry Standard	No.1 (✓) YES ( ) NO
	IDLER SHEAVES: Note;.....		Industry Standard	AUX. (✓) YES ( ) NO Main (✓) YES ( ) NO
	Pins for bronze bushing and straight roller bearing should have a running clearnace of .031 inch/ sheave of end play and should be adjusted accordingly.(count from left)		Industry Standard	(✓) YES ( ) NO
	MAIN POINT SHEAVES:		Industry Standard	Sheave No.1.....0.005..... inch Sheave No.2..0.005..... inch
	AUX SHEAVES:		Industry Standard	Sheave No.1.....0.010..... Inch
	IDLER SHEAVES:		Industry Standard	Sheave AUX.....0.005..... inch. Sheave Main...0...005..... inch.
	Ensure the sheaves are aligned and the fleet angle is correct **Remark ; Wire rope User's Manual allows 2 degree on grooved winch drum, Smooth Drum shuold be not more than 1-1/2 degree		API RP 2D	(✓) YES ( ) NO
	Determine if wire rope size and sheave sizes/grooves are compatible and record size. Sheave pitch diameter (D) to nominal wire rope diameter (d) ratio (D/d) shall not be less than 18:1		API SPEC 2C	(✓) YES ( ) NO
	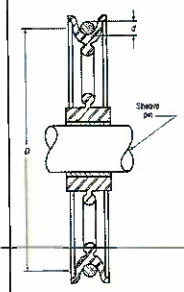	MAIN POINT SHEAVES: SHEAVE D / WIRE ROPE d = >18	API SPEC 2C	18 inch (D) 5/8 inch (d) 28 (Ratio D/d)
		AUX SHEAVES: SHEAVE D / WIRE ROPE d = >18	API SPEC 2C	____ inch (D) ____ inch (d) ____ (Ratio D/d)
		IDLER SHEAVES: SHEAVE D / WIRE ROPE d = > 18 (If applicable)	API SPEC 2C	18 inch (D) 5/8 inch (d) 23 (Ratio D/d)
		MAIN BLOCK SHEAVES: SHEAVE D / WIRE ROPE d = > 16	API SPEC 2C	____ inch (D) ____ inch (d) ____ (Ratio D/d)
Load Block	Load Block: Check the load block for cleanliness, binding sheaves, damaged or worn sheaves, worn or distorted sheave pins, broken bolts, and worn check weights. Note ;.....		Industry Standard	(✓) YES ( ) NO As found.....Normal.....

[redacted] / 29 Nov 25

SYSTEM	TASK	Specification	Record/Reading
	Hook: Check the hook damage, excessive wear to the hook safety latch, hook swivel trunnions, thrust collar, securing, damage or missing lubrication fittings, proper lubrication, cracks and gouges, and if visibly bent or twisted or has been exposed to welding or arching. Note ;.....	Industry Standard	(✓) YES ( ) NO As found.. Normal
	Hook: Tip has been bent more than 10 degree out of plane from the hook body	Industry Standard/API RP2D7	(✓) YES ( ) NO As found.. Normal
	Inspect the Pins for bronze bushing and straight roller bearing should have a running clearnace of .031 inch/ sheave of end play and should be adjusted accordingly	Industry Standard	(✓) YES ( ) NO
	Inspect Hook or shackle to swivel case clearance is set at .031 to .062 inch, Clearance exceeding .12 to .18 (ONLY CROSBY BRAND)	OEM Crosby	(✓) YES ( ) NO
	OEM STANDARD RECOMMEND that Crane block removal from service untill replaced and repair following below	**OEM STANDARD**	
	- Elongated center pin and hook trunnion holes exceeding 5% of Original diameter	OEM STANDARD	(✓) YES ( ) NO As found.. Normal
	-Material loss due to wear exceeding 10% of original section	OEM STANDARD	(✓) YES ( ) NO As found.. Normal
	-Sheave wire rop groove diameter smaller then 2.5%	OEM STANDARD	(✓) YES ( ) NO As found.. Normal
	Loosened tie bolts nuts, center pin round nuts, check weight cap screws and hook nut cap screws. Tie bolt nuts to be torqued to 35-40 ft.Lbs and restaked, all other fasteners wrench tight	OEM STANDARD	(✓) YES ( ) NO
	Throat opening - any distortion causeing an increase in throat opening of 5% not ot exceed 1/4 in. (6 mm.)(or as recommended by the manufacturer)	ASME B30.10	(✓) YES ( ) NO
	Inspect rope track worn in sheave groove, sheave must be resurface or replace	API RP 2D	(✓) YES ( ) NO
	Ensure the load block is not using "Cast Iron" cheek weights they can not be used as per API	API SPEC 2C	(✓) YES ( ) NO As found.. Normal
	Determine if all hooks are equipped with properly operating safety latches and check for proper functioning	API RP 2D	(✓) YES ( ) NO
	Lubricate sheave bearings and swivels	OEM Manual	(✓) YES ( ) NO
	Re-thighten nut firmly to point at which trunion will just rotate, the Re-tighten set-screw in nut and thread condition as in the picture below,	Industry Standard	(✓) YES ( ) NO
	Last NDE inspection record	Industry Standard	Last inspect date_____
	RECORD LOAD BLOCK INFORMATION : — Manufacturer:	OEM Manual	MCKISSICK
	Model:	OEM Manual	M30D14-4
	Serial Number:	OEM Manual	4/13/19818
	Record Load block measurements and details for future comparison with historical data ?	Industry Standard	(✓) YES ( ) NO
	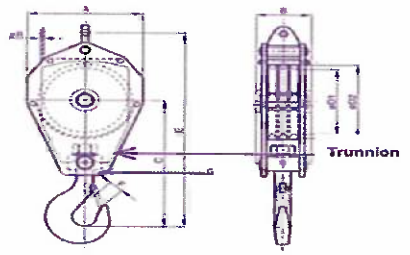 — A - Block OD	Industry Standard	18 mm/ inch
	B - Block length	Industry Standard	33.5 mm/ inch
	C - Center of Pin to hook Saddle	Industry Standard	27 mm/ inch
	D1 - Sheave Diameter	Industry Standard	14 mm/inch
	E - Block Width	Industry Standard	16.5 mm/inch
	F - Throat Opening	Industry Standard	6.5 mm/inch
	G - Trunnion	Industry Standard	0.022 mm/inch
Aux. Ball	**Inspect Auxiliary ball for cleanliness, binding swivel, work pad-eye hole. Inspect the hook damage, excessive wear to the hook safety latch, Bent connector plates,Severe corrosion pitting, hook swivel trunnions, thrust collar, securing, damage or missing lubrication fittings,Loose, missing or damaged retaining nuts, cotter pins or swivel set screws ,Missing or illegible rating and warning tags, proper lubrication, cracks and gouges, and if visibly bent or twisted or has been exposed to welding or arching.**	Industry Standard	(✓) YES ( ) NO
	Hook: Tip has been bent more than 10 degree out of plane from the hook body	Industry Standard/API RP2D7	(✓) YES ( ) NO
	OEM STANDARD recommend that Crane overhaul ball removal from service untill replaced and repair following below	**OEM STANDARD**	
	- Elongated ball pin holes, hook latch pin holes and swivel eye exceeding 5% of original diameter,	OEM STANDARD	(✓) YES ( ) NO As found.. Normal
	-Swivel end play gap exceeding .08". Excessive end play indicates damaged internal set screw	OEM STANDARD	(✓) YES ( ) NO As found.. Normal
	-Material loss due to wear exceeding 10% of original section	OEM STANDARD	(✓) YES ( ) NO As found.. Normal
	Throat opening - any distortion causeing an increase in throat opening of 5% not ot exceed 1/4 in. (6 mm.)(or as recommended by the manufacturer)	ASME B30.10	(✓) YES ( ) NO
	All hooks that lift personnel are to have a positive locking safety latch **locking Pin to be used while lifting personnel**	API RP 2D	(✓) YES ( ) NO
	*** Temperature Effected : When hooks are to be used at temperature above 400° F. (204°C) or below -40°F (-40°C), the hook manufacturer or a qualified person should be consulted *** Chemically Active Environment : The strength of hooks can be affected by chemically active environments, such as caustic or acid substances or fumes. The hook manufacturer or qualified person should be consulted before hooks are used in chemically active environment	ASME B30.10	Yes
	Verify to ensure nut firmly at which trunion rotate. Identify to set-screw in nut/ swivel/ counter pin and thread condition.	Industry Standard	(✓) YES ( ) NO
	Last NDE inspection record	Industry Standard	Last inspect date_____
	RECORD AUX BALL INFORMATION : — Manufacturer:	OEM Manual	MCKISSICK
	Model:	OEM Manual	MB7T200E
	Serial Number:	OEM Manual	4/13/9593.
	Record Auxiliary Ball measurements and details for future comparison with historical data: For Model MB07T200E ONLY	Industry Standard	
	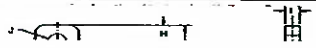 AA Dimensions 3.0 Inch	Industry Standard	3.0 mm/ inch

[redacted] / 11 Nov 25

SYSTEM	TASK		Specification	Record/Reading
	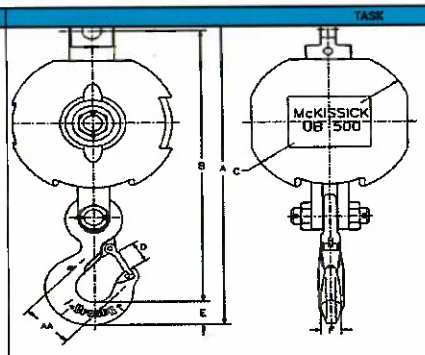	A Dimensions 24.89 inch	Industry Standard	24.80 mm/ inch
		B Dimensions 21.71 inch	Industry Standard	21.70 mm/ inch
		C Dimensions 12.50 inch	Industry Standard	12.50 mm/ inch
		D Dimensions 1.61 inch	Industry Standard	1.60 mm/ inch
		E Dimensions 1.81 inch	Industry Standard	1.81 mm/ inch
		F Dimensions 1.38 inch	Industry Standard	1.38 mm/ inch
		H Dimensions 1.38 inch	Industry Standard	1.38 mm/ inch
		I Dimensions 0.88 inch	Industry Standard	0.88 mm/ inch
		J Dimensions 1.31 inch	Industry Standard	1.31 mm/ inch
Safety system	Check Condition anti - two block , hanging chain ,eye bolts , fix bolts , shackle for missing , corrosion , erosion , deformation		API RP 2D	(✓) YES ( ) NO
	Check anti - two block kick out plate for freely movement		Company Spec/Standard	(✓) YES ( ) NO
	Check anti-2-block device proper function of Main winch		Company Spec/Standard	(✓) Function ( ) False
	Check anti-2-block device proper function of Aux. winch		Company Spec/Standard	(✓) Function ( ) False
	Check relation of boom radius and boom angle (lowest, middle, highest) with refrence to load chart. Recharge fluid W-15 to load indicator, if required.		API RP 2D	(✓) YES ( ) NO
	Functional test of emergency lowering system (See procedure in Emergency Load Lowering Box). **Note:** Keep for 1 Yr PM to sustain crane mechanic competency. **Caution:** Function test must be performed on top deck with max 2-foot height.		Company Spec/Standard	(✓) YES ( ) NO ( ) N/A
	Visually check emergency load lowering kit. Ensure EMERGENCY LOWERING PROCEDURE and MATERIAL LIST are in the box. - Ensure ALL items shown on the list are in the box and in good condition - **SECURE THE BOX WITH A TIE WRAP.**		Company Spec/Standard	(✓) YES ( ) NO ( ) N/A
Slew Mechanism	Visually check for damage and excessive wear on gear teeth		OEM Manual	(✓) YES ( ) NO
	Visually check slew gear box in the area of oil seal for any leaks		API RP 2D	(✓) YES ( ) NO
	RECORD SLEW GEAR BOX INFORMATION :	Manufacturer:	OEM Manual	ESK
		Model:	OEM Manual	250 A D1C4-51
		Serial Number:	OEM Manual	
	CHECK and RE-TORQUE swing drive gearbox mounting bolts at following brands: - ESKRIDGE, Model: 250 = 150 FT-LBS		API RP 2D	(✓) Yes ( ) No
	Check swing gearbox oil level/condition, top up if required	Meropa 220	OEM Manual	(✓) YES ( ) NO
	Monitor slew gearbox oil condition by visually examine for burnt smell, metal particles, and/or other contaminants, record and change if found.		OEM Manual	(✓) CHANGE OIL (✓) NOT CHANGE OIL
	Change slew gear box oil		OEM Manual	(✓) CHANGE OIL (✓) NOT CHANGE OIL
	Grease all pivot points of slew ring (bearing)		OEM Manual	(✓) YES ( ) NO
	Grease open gears (pinion)		OEM Manual	(✓) YES ( ) NO
	Rotate crane 360 degree and check smoothness of operation		OEM Manual	(✓) YES ( ) NO
	Check swing drive static parking brake for proper operation Caution: **DO NOT stop the swing of the crane with this static brake (parking brake)**		OEM Manual	(✓) YES ( ) NO
	Check swing drive dynamic parking brake for proper operation		OEM Manual	(✓) YES ( ) NO
	Check swing lock mechanism condition; corrosion ,dent , loos all part,worn and wear		OEM Manual	(✓) YES ( ) NO As found condition: Normal
	Check swing lock mechanism freely lock and unlock for function. **Check and inspect for hydraulic for leaks on actuator model.**		OEM Manual	(✓) YES ( ) NO As found condition: Normal
	Check condition of slew ring bolts e.g. Bolt grade and washers. Caution: Use only hardened flat washers under head of bolt. Do not use lock washers, or regular flat washers.		Industry Standard	(✓) YES ( ) NO As found condition: Normal
	Monitor ball-ring grease sample. If found wear and tear particles, take sample and send to lab. **Wear assessment by grease sample analysis—wear may be monitored by periodic grease sample analysis as describe in this section. Grease samples should be collected every twelve months as a minimum and the results of the analysis recorded; this period should be shortened if obvious metal or contaminants are present.		API RP 2D	( ) SEND TO LAB (✓) NOT SEND TO LAB As found: Normal
	Verify crane condition and load test as separate procedure. **Table 1—Static/Onboard Test Load and Radius** Static/Onboard Rated Load at a Specific Radius lb (kg) — Test Loads In Excess of Static/Onboard Rated Load at a Specific Radius ≤ 40,000 (18,144) — 25 % > 40,000 ≤ 100,000 (>18,144 ≤ 45,356) — 10,000 lb (4536 kg) > 100,000 (45,356) — 10 %		API 2C	( ) YES ( ) NO Specific test load: 5200 lbs.
	Verify crane condition and load test as separate procedure. " Record crane load test in load test form."		Company Standard	(✓) YES ( ) NO

Risk Level Definitions: The following 3 levels indicate the impact the noted deficiency poses to the operation or structural integrity of the equipment:

Level 1 = Incidental	Level #2 = Restricted Operation	Level #3 =Out of Service
Minor deficiency that is recommended to be promptly addressed, but poses no safety and/or environmental risk. The crane can still be operated at full duty.	Deficiency identified that has the potential to limit, de-rate or damage the crane, its surroundings and/or the environment. The duty and locked/ tagged out until the crane's duty and operation should be de-rated or service restricted.	The crane should be removed from duty and locked/ tagged out until the deficiency is rectified.

[redacted] / 11 Nov 25

SYSTEM	TASK				Specification	Record/Reading
System:	Risk Level:	Component:			In Accordance with:	
		Location:			Date Originated:	
Description:						
Recommended Action:						
Recommended urgency timeframe for corrective action:			Completed Date:		Completed By:	

System:	Risk Level:	Component:			In Accordance with:	
		Location:			Date Originated:	
Description:						
Recommended Action:						
Recommended urgency timeframe for corrective action:			Completed Date:		Completed By:	

System:	Risk Level:	Component:			In Accordance with:	
		Location:			Date Originated:	
Description:						
Recommended Action:						
Recommended urgency timeframe for corrective action:			Completed Date:		Completed By:	

System:	Risk Level:	Component:			In Accordance with:	
		Location:			Date Originated:	
Description:						
Recommended Action:						
Recommended urgency timeframe for corrective action:			Completed Date:		Completed By:	

System:	Risk Level:	Component:			In Accordance with:	
		Location:			Date Originated:	
Description:						
Recommended Action:						
Recommended urgency timeframe for corrective action:			Completed Date:		Completed By:	

System:	Risk Level:	Component:			In Accordance with:	
		Location:			Date Originated:	
Description:						
Recommended Action:						
Recommended urgency timeframe for corrective action:			Completed Date:		Completed By:	

Done by.

[redacted]

10 Nov 2025.

THE PEDESTAL CRANE CONDITION VERIFICATION

Date : 10 Nov 25			
Crane Owner : CTEP/ COTL Field: Benchamas Platform/ Vessel: SRWA			
Crane Owner 's representative : (Mech Supv./ M'Dent)			
Qualified inspector : (Qualified Crane Mechanic) [redacted]			
Inspector 's company / agency : (Third Party or Outsource to witness if applicable)			
Manufacture Nautilus Fabrication by Oilstates Year of Fabrication 2014 Country USA Model / Serial 190B1HD-30MS / 22313 C Standard API Edition Seventh 2012			Remark
Safe Working Load (SWL) —> OEM	15.46 Metric Tonnes		
Safe Working Load (SWL) —> Existing via MOC, if applicable	– Metric Tonnes		
Boom length, Main	80 Ft		
Boom length, Auxiliary if applicable	– Ft		
Part of line main hoist	4 Part line		
Part of line auxiliary hoist	1 Part line		
Safe Working Load at longest boom radius	80 ft	3.50 Metric Tonnes/ Lbs	
Safe Working Load at shortest boom radius	13 ft	15.46 Metric Tonnes/ Lbs	
The document of crane specification for Testing , Maintenance and Inspection are provided by:	OEM	MOC / Crane Engineer	
Has the crane ever been modified by MOC ? (To verify if this crane is modified with MOC --> Allow to test the crane. If this crane is modifed without MOC --> Not allow to test the crane)	YES	NO	(Employers are not allowed to modify or adjust any part of cranes or dericks or consent to other persons to do these things, that might reduce the safety of the employees who work with the cranes or derricks).
Does the rotating part have proper guard in place?	YES	NO	(Need mitigation plan)
Is the ladder and hand rail in place?	YES	NO	(Need mitigation plan)
Is the maintenance platform in place?	YES	NO	(Need mitigation plan)
Is the SWL tag labelled on crane pedestal, main block or aux ball?	YES	NO	(Need mitigation plan)
Verify if the crane major component damaged or not	YES (Need to repair or mitigate unsafe condition with MOC before testing)	NO	(Employers shall not allow employees work with damaged/ unsafe cranes or derricks)
Inspect boom end connections, for bends, dents, corroded areas, cracked welds, and signs of mechanical damage, wear, etc. **any deviation should be reported** Level 1 = Incidental : Minor deficiency that is recommended to be promptly addressed, but poses no safety and/or environmental risk. The crane can still be operated at full duty. --> Allow to test Level #2 = Restricted Operation: Deficiency identified that has the potential to limit, de-rate or damage the crane, its surroundings and/or the environment. The duty and locked/ tagged out until the crane's duty and operation should be de-rated or service restricted. --> To be derated Level #3 = Out of Service;The crane should be removed from duty and locked/ tagged out until the deficiency is rectified. --> Not Use	YES (To be verified)	NO	
Function Load Testing			
1. Verify Crane SWL (Existing)	3.0 Metric Tonnes		
2. Verify routine maximum actual load.	2.4 Metric Tonnes		
3. Select the specimen load to be more than actual routine load 1.25 times but not more than SWL Example # 1 : Crane 's SWL is 18 Metric Tonnes. The routine maximum actual load is 2.4 Metric Tonnes. Therefore, the load testing shall be 2.4 x 1.25 = 3 Metric Tonnes. Example # 2 : Crane 's SWL is 18 Metric Tonnes. The routine maximum actual load is 16 Metric Tonnes. By calculation, the load testing is 16 x 1.25 = 20 Metric Tonnes more than SWL (18 MTon). **Therefore, the load testing shall be 18 Metric Tonnes equal to SWL.**	3.0 Metric Tonnes		
4. Use Auxiliary Winch if specimen load less than or equal 3 Metric Tonne	YES	NO	
5.Use Main Winch if specimen load more than 3 Metric Tonne	YES	NO	
6. The record of load testing : Fill in "Function Test Record" sheet attached.			

RECORDED FUNCTION TEST PROCEDURE

1. CHECK AND RECORD READING RADIUS AND BOOM INDICATIOR AT FOUR (4) VALUES INCLUDING MAXIMUM AND MINIMUM.

(ALL REDIUS MEASUREMENT ARE TO BE TEKEN FROM THE CENTERLINE OF CRANE ROTATION)

ACTUAL	INDICATED RADIUS (FT)
A) 15' (MINIMUM)	15
B) 20'	20
C) 25'	25
D) 30' (INTERMIDIATE)	30
E) 40'	40
F) 50' (INTERMIDIATE)	50
G) 60'	60
H) 75' (MAXIMUM)	75

2. CHECK AND RECORD READING ON BOOM ANGLE / DEGREES.

SPECIFICATION	INDICATED BOOM ANGLE (DEGREES)
1). MAXIMUM. .....80..... DEGREES	80
2). INTERMEDIATE. .....60..... DEGREES	60
3). INTERMEDIATE. .....40..... DEGREES	40
4). MINIMUM. .....0..... DEGREES	0

3. READING ON LOAD INDICATOR WITHOUT SLINGS OR LOAD / LBS. (LOAD BLOCK + WIRE ROPE)

ACTUAL	INDICATOR READ FREE LOAD, (LBS)
1). MAXIMUM RADIUS 680 LBS.	680
2). MINIMUM RADIUS 790 LBS.	790

4. CHECK AND RECORD ENGINE HIGH IDLE SPEED / RPM.

SPECIFICATION	INDICATED OF FUNCTIONAL (RPM)
1). IDLE SPEED 900 RPM	900
2). LOW SPEED – RPM	–
3). HIGH SPEED 2200 RPM	2200

5. FUNTIONALLY TEST THE FOLLOWING.

ACTUAL	INDICATED OF FUNCTIONAL (TESTED)
A) MAIN HOIST ANTI -TWO BLOCK.	function
B) AUXILIALY HOIST ANTI -TWO BLOCK.	function
C) HIGH BOOM ANGLE KICK OUT.	N/A
D) LOW BOOM ANGLE KICK OUT.	N/A
E) PRIME MOVER SHUTDOWN.	function
F) EMERGENCY SHUTDOWN.	function
G) ROTATE CRANE 360 LEFT.	Smoot
H) ROTATE CRANE 360 RIGHT.	Smoot

6. RECORD HYDRAULIC RELIEF VALVE PRESSURE SETTING ON FOLLOWING HYDRAULIC FUNCTION:

SPECIFICATION	INDICATED PRESSURE (PSI)
A) MAIN HOIST 3250 PSI.	3250
B) AUXILIALY HOIST 2950 PSI.	2950
C) BOOM HOIST 3000 PSI.	3000

TEST CONDUCTED BY: [redacted] POSITION :

CRANE OPERATOR : POSITION : CR-Mech

COMMENTS : DATE : 10 Nov 25

CRANE MAKE : American Aero
MODEL: B-65
SERIAL NUMBER : 98912

LOCATION
C1 / BEPP South side

DATA BASE - PM JOB TASK CARD
WO: 1263967

Crew Size: 2
Estimated Hours: 24

SYSTEM	TASK		Specification	Record/Reading
	JOB PREPARATION			
Safety	Perform Job Safety Analysis (JSA)		Company Spec/Standard	(✓) YES ( ) NO
	Obtain "COMPANY" PERMIT TO WORK		Company Spec/Standard	(✓) YES ( ) NO
	Perform Tool Box Talk		Company Spec/Standard	(✓) YES ( ) NO
	BEFORE/AFTER JOB EXECUTION: Ensure to comply with isolation procedure (LOCK OUT/TAG OUT, WARNING SIGNS and BARRIERS).		Company Spec/Standard	(✓) YES ( ) NO
Required Tools	Insure proper tools are available at the job site		Company Spec/Standard	(✓) YES ( ) NO
	Tool bag		Company Spec/Standard	(✓) YES ( ) NO
	Tool box		Company Spec/Standard	(✓) YES ( ) NO
Lubricants	Insure proper lubricants and consumables are available at the job site.		Company Spec/Standard	(✓) YES ( ) NO
	Hydraulic System - Hydraulic Oil	Rando HD-68	OEM Manual	(✓) YES ( ) NO
	Slew Gearbox - Gear Oil	Omala 220	OEM Manual	(✓) YES ( ) NO
	Auxiliary Hoist - Gear Oil	Omala 220	OEM Manual	(✓) YES ( ) NO
	Main Hoist - Gear Oil	Omala 220	OEM Manual	(✓) YES ( ) NO
	Grease Points - Lithium Based **IT MUST NOT INCLUDE MOLYBDENUM	MULTIFAX EP#2	OEM Manual	(✓) YES ( ) NO
	Open Gear Teeth - Open Gear Lube highly water resistant and of an adhesive	Open Gear Lube	OEM Manual	(✓) YES ( ) NO
	Pneumatic Lubricator	SAE Grade 10	OEM Manual	( ) YES (✓) NO
	Wire rope Lubricant Company preferred grade	Brilube 70	OEM Manual	(✓) YES ( ) NO
	Engine Oil - SAE Grade 15W-40 (Delo Gold)	15W-40	OEM Manual	(✓) YES ( ) NO
	Safe Load Indicator fluid	W-15	OEM Manual	(✓) YES ( ) NO
	Engine Radiator - Should have radiator preservatives additives	Delo Extended Life	OEM Manual	(✓) YES ( ) NO
Consumables	Spray Cold Galvanize		Company Spec/Standard	(✓) YES ( ) NO
	Denso Tape		Company Spec/Standard	(✓) YES ( ) NO
	WD-40		Company Spec/Standard	(✓) YES ( ) NO
History Review	Before starting work, tasks preparation at least 1 day prior to starting work: 1. Review history PM/ CM from Roving Team, 2. Review last PM/ CM/ PMI from Crane Mech, 3. List out all punch list and prepare parts. 4. Review last Certificate task performed		API RP 2D	(✓) YES ( ) NO
	Require to update part history from Roving Team and Crane Mech on following main compenents to ensure the right parts are prepared: - Aux/ Main/ Boom Cylinder, Engine, Swing Gearbox, etc. **Reference:** Crane OEM information of each part need to be recorded - Manufacturer & Contact info - Model & serial number - Installation date		Company Spec/Standard	(✓) YES ( ) NO
	Review history data from Certificates and incorporate into current PM: - Pull Test Certificates (ongoing update, 4 yr. history). - Load Test Certificates (ongoing update, 4 yr. history). - Wire Rope Certifications (running rope and standing rope) (life of rope). - Hoist Certifications for hoist classified as "personnel handling" hoist.		API RP 2D	(✓) YES ( ) NO
	Review Last Preventative Maintenance Records (Inspection Reports) - Pre-use (Pre-Post Inspection) - 1 Monthly - 3 Monthly (API RP 2D Defined Quarterly Inspection) - 6 Monthly (API RP 2D Not Defined, Company Standard) - 1 Yearly (API RP 2D Defined Annual Inspection)		API RP 2D	(✓) YES ( ) NO
Lifting Gear Preparation	Visually Inspect (Sling, sling hooks and shackles) include Websling / Chain		Company Spec/Standard	(✓) YES ( ) NO
	Check color code / Tag & date inspection		Company Spec/Standard	(✓) YES ( ) NO
	PM JOB STARTING			
General	Determine if access route to-from crane is clean, safe, unobstructed and adequately protected against falls, tripping and slipping		Company Spec/Standard	(✓) YES ( ) NO
	Inspect all ladders and cages		API RP 2D	(✓) YES ( ) NO
	Inspect drain lines and drip pans for deterioration		API RP 2D	(✓) YES ( ) NO
	Remove any sediment collected in the bottom of drip pans		Industry Standard	(✓) YES ( ) NO
	Inspect for general crane and components for loss of protective coating and corrosion		Industry Standard	(✓) YES ( ) NO
	Visually inspect for missing or loose pins, pin keepers, bolts, nuts, fasteners		API RP 2D	(✓) YES ( ) NO
	Apply grease to exposed grease parts (control valve spools, ball-ring gear, parking brake valve, etc.)		OEM Manual	(✓) YES ( ) NO
	Grease all grease fittings e.g. boom foot pin, lower/ upper tank of boom cylinder		OEM Manual	(✓) YES ( ) NO
Take oil sample	Prepare oil sample bottles, labeling and required			(✓) YES ( ) NO
	Review previous oil analysis report			(✓) YES ( ) NO
	Prepare the hoist and hydraulic oil sample point by cleaning the drain area			(✓) YES ( ) NO
	Start the crane engine and run until the water teamerature reaches 60°C(140°F) And check leaked			(✓) YES ( ) NO
	Operate the hoist in both diretions for one to two minutes.			(✓) YES ( ) NO
	Do not take the sample from the first oil out the drain port			(✓) YES ( ) NO
	Take a sample from the mid stream flow of the oil to obtain accurate representation of the oil condition (APPROX.250 CC.)			(✓) YES ( ) NO
				(✓) YES ( ) NO
	Close the sampling valve and install the valve protecive cap			(✓) YES ( ) NO
	After an oil sample then check the oil level and add new oil as required.			(✓) YES ( ) NO
	Hydraulic Oil	Rando HD-68	Current reading ____ HRS	(✓) YES ( ) NO
	Main Hoist - Gear Oil / Meropa 220 / Model CH280A-53608/0960	S/N 9804935	reading 81078 HRS	(✓) YES ( ) NO
	Aux. Hoist - Gear Oil / Meropa 220 / Model CH280B-35040-01	S/N 1500611	Current reading 81078 HRS	(✓) YES ( ) NO
	Boom Hoist - Gear Oil / Meropa 220 / Model	S/N	Current reading ____ HRS	(✓) YES ( ) NO
	Engine -Lube oil / 3306	Delo Gold 15W-40	Current reading 81078 HRS	(✓) YES ( ) NO
	Check lube oil level and condition, top up / replace if required		OEM Manual	(✓) YES ( ) NO

[redacted] / 8 Nov 25.

SYSTEM	TASK			Specification	Record/Reading
	Check diesel tank level, top up if required **Full Tanks gather less Condensation**			OEM Manual	(✓) YES ( ) NO
	Check/Clean crankcase breather			OEM Manual	(✓) YES ( ) NO
	Check/Clean air cleaner			OEM Manual	(✓) YES ( ) NO
	Check radiator & Cap and record condition			OEM Manual	(✓) YES ( ) NO
	Check for any signs of leaks on or around the engine ie; Crankshaft seal (front /rear)			OEM Manual	(✓) YES ( ) NO
	Inspect for engine exhaust system for leaks, corrosion, insulation and general condition			OEM Manual	(✓) YES ( ) NO
	Inspect all engine hoses for wear and deterioration			OEM Manual	(✓) YES ( ) NO
	Drain water and sediment for diesel tank			OEM Manual	(✓) YES ( ) NO
	Lubricate fan bearing/shaft			OEM Manual	(✓) YES ( ) NO
	Test radiator Coolant PH, Top up if required and Record Value			OEM Manual	(✓) YES ( ) NO
	COOLANT PARAMETERS (PH):	6 to 8		OEM Manual	PH = 7
	Determine if engine hour meter is working and giving accurate measurements and record:			OEM Manual	
	HOUR METER PARAMETERS:	LAST READING	xxxx HRS	OEM Manual	8109 HRS
	Check condition of engine hold down bolts			OEM Manual	(✓) YES ( ) NO
	Inspect belts for wear and looseness. If necessary, replace or adjust. To check belt Tension, apply 110 N (25 lbs) of force midway between the pulleys. Correctly adjusted belts with deflect 13 to 19 mm (1/2 to 3/4 inch).			OEM Manual	(✓) YES ( ) NO
	Check engine starter drive gear bendix and fly wheel gear teeth condition and record. **Replace if required"			OEM Manual	(✓) YES ( ) NO
	Lubricate engine throttle linkage, if applicable			OEM Manual	(✓) YES ( ) NO
	Determine if the tachometer operates properly: Record Value of Idle & Max Speed (RPMs) Note: Too low Idle (RPMS) will cause excessive worn at winch break			OEM Manual	
	ENGINE RPM SPECIFIC**	IDLE SPEED	850 RPM	OEM Manual	850 RPM
		MAX SPEED	2100 RPM	OEM Manual	2200 RPM
	Confirm engine oil pressure as per Parameters below and Record Value:			OEM Manual	
	ENGINE OIL PRESSURE SPECIFIC**	Minimum	30 PSI	OEM Manual	30 PSI
		Maximum	70 PSI	OEM Manual	70 PSI
	Confirm engine fuel pressure Parameters are correct and Record Value:			OEM Manual	
	ENGINE FUEL PRESSURE SPECIFIC**	Minimum	25 PSI	OEM Manual	25 PSI
		Maximum	42 PSI	OEM Manual	40 PSI
	Confirm engine temperature Parameters and Record Value:			OEM Manual	
	ENGINE WATER TEMP PARAMETERS	NORMAL	120 - 180 degrees F	OEM Manual	175 F
	Test engine SAFETY DEVICE- ensure engine kill cable shuts off FUEL supply			API RP 2D	(✓) Function ( ) False
	Test engine SAFETY DEVICE- ensure EMERGENCY KILL CABLE - shuts off AIR supply			API RP 2D	(✓) Function ( ) False
	Test engine SAFETY DEVICE- ensure LOW LUBE OIL PRESSURE - releases OIL PRESSURE to trip the Fuel Supply and shutting down engine			Company Spec/Standard	(✓) Function ( ) False
	Test engine SAFETY DEVICE- ensure OVER SPEED - releases OIL PRESSURE to trip the Fuel Supply and shutting down engine			Company Spec/Standard	(✓) Function ( ) False
	Evaluate engine performance, tune up if required			Company Spec/Standard	(✓) YES ( ) NO
	Check / Clean primary fuel/water separator *Replace if required*			OEM Manual	(✓) YES ( ) NO
	Obtain engine lube oil sample (if running hours are more than 100 hours for new engine or during Annual inspection for old engine) - **Apply for C1 Crane Only.**			OEM Manual	(✓) YES ( ) NO
	Check condition of turbocharger, and for any oil or hot air leaks			OEM Manual	( ) Leak (✓) Not Leak
	Change fuel filter			OEM Manual	(✓) YES ( ) NO
Eleritc Start System	Check condition of electric starter and component all parts.			OEM Manual	(✓) YES ( ) NO
	Check condition of cord and connecting of line power.			OEM Manual	(✓) YES ( ) NO
	Check function start engine. * Note : Do not crank the engine for more than 30 seconds.*			OEM Manual	(✓) Function ( ) False
	Check the battery power by check lamp of monitor control. (Is the light on)			OEM Manual	(✓) YES ( ) NO
Hoist / Brakes	Any time a hoist exhibits erratic operation and/or unusual noise, the hoist must be taken out of service until it is inspected and serviced by a qualified technician. Continued operation of a hoist with a defect in a critical component may lead to loss of load control, property damage, serious injury or death.			OEM Manual	(✓) YES ( ) NO
	Inspect exteriors of hoist, frames, drums and flanges for damage, leaks, cracks and wear and repair/replace as required to maintain the structural integrity of the hoist.			OEM Manual	(✓) YES ( ) NO
	Check all hoist mounting pins, bolts or other fasteners and replace or tighten as necessary.			**OEM Manual**	(✓) YES ( ) NO
	Lubricant level must be maintained between the minimum and maximum levels; midway up sight glass or at bottom of level plug port as equipped and check/clean plug vent. **Use only the recommended type of lubricant.**			OEM Manual	(✓) YES ( ) NO
	Check for external oil leaks and repair as necessary. **This is extremely important due to the accelerated wear that will result from insufficient lubricating oil in the hoist.**			OEM Manual	(✓) YES ( ) NO
	RECORD MAIN HOIST INFORMATION :		Manufacturer:	OEM Manual	BRADEN
			Model:	OEM Manual	CH240A-53/064/046-01
			Serial Number:	Inspector's Assessment	9804934
	Check MAIN HOIST for proper operation and good condition			API RP 2D	(✓) YES ( ) NO
	Brake test & record pressure of MAIN HOIST			**OEM Manual**	(✓) YES ( ) NO
	Check MAIN HOIST gearbox oil level/condition, top up if required. **** Refer to Onsite Gear Oil Sample Procedure **** **** Replace and send oil sample to SKL if abnormal **** **** Take photo of Oil Sampling for Reference****			OEM Manual	(✓) YES ( ) NO
	Obtain MAIN HOIST gearbox oil sample and visually check			OEM Manual	(✓) YES ( ) NO
	RECORD AUXILIARY HOIST INFORMATION :		Manufacturer:	OEM Manual	BRADEN
			Model:	OEM Manual	CH230B-35DAD-01
			Serial Number:	Inspector's Assessment	1500611
	Check AUXILIARY HOIST for proper operation and good condition			API RP 2D	(✓) YES ( ) NO
	Brake test & record pressure of AUXILIARY HOIST			**API RP 2D**	(✓) YES ( ) NO
	Check AUXILIARY HOIST gearbox oil level/condition, top up if required. ** Refer to Onsite Gear Oil Sample Procedure ** ** Replace and send oil sample to SKL if abnormal ** ** Take photo of Oil Sampling for Reference**			OEM Manual	( ) SEND SKL LAB (✓) NOT SEND SKL LAB
	Obtain AUXILIARY HOIST gearbox oil sample and visually check			OEM Manual	(✓) YES ( ) NO

[redacted] / 8 Nov 2025

SYSTEM	TASK			Specification	Record/Reading
	Check Relief Valve: Determine hoistes' relief valve pressure gauge is working and giving accurate measurement by notice whether pressure gauge is vibrating or not. If not, set relief valve pressure in accordance with the schematic and parameters below. Record all readings.			OEM Manual	(✓) YES ( ) NO
	BOOM RELIEF VALVE TEST	Relief Specific:	3300 PSI	OEM Manual	3300 PSI
	MAIN HOIST RELIEF VALVE TEST	Relief Specific:	3000 PSI	OEM Manual	3000 PSI
	AUX HOIST RELIEF VALVE TEST	Relief Specific:	3000 PSI	OEM Manual	3000 PSI
	SWING RELIEF VALVE TEST	Relief Specific:	3000 PSI	OEM Manual	3000 PSI
	Measure flow rate of hoist motor case drains and Record Value **Reference Bulletin:** BRADEN Inspection, Testing, Preventive Maintenance and Special Operating Instructions For Planetary Hoists PB-308 latest edition for further details.			OEM Manual	
	MAIN HOIST CASE DRAIN for Gear Motor (Down Mode). All Crane Types Except Favco & Herkules :	IDLE	200 ml/ min	Company Spec/Standard	200 ml/ min
		FULL	500 ml/ min	Company Spec/Standard	500 ml/ min
	AUX HOIST CASE DRAIN for Gear Motor (Down Mode). All Crane Types Except Favco & Herkules :	IDLE	200 ml/ min	Company Spec/Standard	200 ml/ min
		FULL	500 ml/ min	Company Spec/Standard	500 ml/ min
	BOOM HOIST CASE DRAIN for Gear Motor (Down Mode). All Crane Types Except Favco & Herkules :	IDLE	200 ml/ min	Company Spec/Standard	200 ml/ min
		FULL	500 ml/ min	Company Spec/Standard	500 ml/ min
Hydraulic System	Check hydraulic tank oil level. Oil should be visible in the sight glass. Top up as required (3/4 Tank Minimum)			OEM Manual	(✓) YES ( ) NO
	Check hydraulic oil condition. (Check if running hours are more than 100 hours from last oil change or during Annual inspection) ** Refer to Onsite Hydraulic Oil Sample Procedure ** ** Replace and send oil sample to SKL if abnormal ** ** Take photo of Oil Sampling for Reference**		Rando HD-68	Company Spec/Standard	( ) SEND SKL LAB (✓) NOT SEND SKL LAB
Hydraulic System	Drain off 1 liter of oil to remove condensed water. If water is present, drain until water is removed and top up with clean oil			Industry Standard	(✓) YES ( ) NO
	Check for any hydraulic leaks			Industry Standard	(✓) YES ( ) NO
	Check the hydraulic hose, piping and tubing for mechanical damage, corrosion, splits, blisters, cracking or excessive abrasion on the outer surface			API RP 2D	(✓) YES ( ) NO
	Check that all hydraulic hose connections are sound and that all mounting and pivoting connections are secure.			Industry Standard	(✓) YES ( ) NO
	Ensure the filler breather on tank is not covered or clogged			Industry Standard	(✓) YES ( ) NO
	Visually inspect for missing or loose pins, pin keepers, bolts, nuts, fasteners on all pumps, motors and valves			API RP 2D	(✓) YES ( ) NO
	Check the filter bypass indicator, while engine is running			OEM Manual	(✓) YES ( ) NO
	With engine running (after all other items pass inspection), check the system for leaks around fittings, hoses, valves and reservoirs			Industry Standard	(✓) YES ( ) NO
	With engine running, check the source of any unusual noise or vibration that may cause or indicate equipment damage or wear			Industry Standard	(✓) YES ( ) NO
	Ensure all hoses are properly rated for the system, see "Parameters" for each system for details.			Industry Standard	(✓) YES ( ) NO
	Check sign for leak, clamp support and condition of hydraulic oil cooler			Industry Standard	(✓) YES ( ) NO
	Record hydraulic oil operating temperture. Note: Hydraulic fluid overheating temperature is over 180 F degrees or 82 C, degrees (reservoir temperature)			Industry Standard	130 Degree F
	Determine if hydraulic return pressure gauge is working and giving accurate measurements. Record readings				
	RECORD HYDRAULIC RETURN PRESSURE:		75 psi "maximum"	OEM Manual	55 PSI
	Test all hydraulic relief valves and record pressures with engine at :		2100 RPM	API RP 2D	
	BOOM FUNCTION TEST	Relief Specific:	3300 PSI	OEM Manual	3000 PSI
	Boom Angle : 60 Degree (Recommend or as applicable)	UP (working)	RECORD	OEM Manual	900 PSI
		DOWN (working)	RECORD		1000 PSI
	MAIN HOIST FUNCTION TEST	Relief Specific:	3000 PSI	OEM Manual	3000 PSI
	Boom Angle : 60 Degree (Recommend or as applicable)	UP (working)	RECORD	OEM Manual	1400 PSI
		DOWN (working)	RECORD		1600 PSI
	AUX HOIST FUNCTION TEST	Relief Specific:	3000 PSI	OEM Manual	3000 PSI
	Boom Angle : 60 Degree (Recommend or as applicable)	UP (working)	RECORD	OEM Manual	1700 PSI
		DOWN (working)	RECORD		1700 PSI
	SWING FUNCTION TEST	Relief Specific:	3000 PSI	OEM Manual	3000 PSI
	Boom Angle : 60 Degree (Recommend or as applicable)	Right (working)	RECORD	OEM Manual	1000 PSI
		Left (working)	RECORD	OEM Manual	1000 PSI
Electrical system	Check the electrical junction boxes, wires and connections for deterioration			Industry Standard	(✓) YES ( ) NO
	Check the condition of the Slip ring			Industry Standard	(✓) YES ( ) NO
	Check the condition of the grounding and lighting protection system.			Company Spec/Standard	(✓) YES ( ) NO
	Visually inspect boom lights and light guards for loose, missing, corroded			Company Spec/Standard	(✓) YES ( ) NO

[redacted] / 8 Nov 25.

SYSTEM	TASK		Specification	Record/Reading
	Check the electrical junction boxes, wires and connections for desiccant bags, (replace as required)		Company Spec/Standard	(✓) YES ( ) NO
	Check condition of battery		Industry Standard	(✓) YES ( ) NO
	Check volt of Battery		Industry Standard	12 Volt
	With generator in operation, intergize all lights to unsure proper function.		API RP 2D	( ) YES ( ) NO
Operator Control Station	Check general condition of control panel, bolts, paint security, etc.		API RP 2D	(✓) YES ( ) NO
	Determine if there is a serviceable fire extinguisher in the vicinity of the crane		Company Spec/Standard	(✓) YES ( ) NO
	Determine if correct load chart is in use and easily visible for operator		API RP 2D	(✓) YES ( ) NO
	Determine if charts, indicators and hand signal chart are in the cabling and firmly attached		API RP 2D	(✓) YES ( ) NO
	Determine if angle/radius indicator plate is easily visible to operator and is moving freely.		API RP 2D	(✓) YES ( ) NO
	Check condition of control levers and determine if they "dead-man" back to the neutral position.		API RP 2D	(✓) YES ( ) NO
	Check condition of pressure gauges.		API RP 2D	(✓) YES ( ) NO
	Check proper control labels are firmly installed, completely legible and properly labeled		API RP 2D	(✓) YES ( ) NO
	Check controls for freedom-of-movement		API RP 2D	
	Check condition and function Main/ Aux selector valve		Industry Standard	(✓) YES ( ) NO
	Check condition and function of boom/ main/ aux/ swing joy stick		Industry Standard	(✓) YES ( ) NO
Load Indicator System	Visual check on fittings and connections for leaks. Fix leak if any.		OEM Manual	(✓) YES ( ) NO
	Should any leaks exist, stop leak and recharge system, refer to maintenance manual		OEM Manual	(✓) YES ( ) NO
	Check general condition of tubbing, hoses, pins bolts, paint, etc.		Industry Standard	(✓) YES ( ) NO
	Check load cell gap 5/8 inch or +/- 1/8 inch (Daiphragm Load Cell Type)		OEM Manual	(✓) YES ( ) NO
	Insure load cell is free of obstructions		OEM Manual	(✓) YES ( ) NO
	Check condition of gauge(s) face and clean glass as required.		OEM Manual	(✓) YES ( ) NO
	Check weight indicator function (Main)		Company Spec/Standard	(✓) YES ( ) NO
	Check weight indicator fluid, top up if required		Industry Standard	(✓) YES ( ) NO
	Insure Safe Working Load, matches ratings on the Crane Load Chart		OEM Manual	(✓) YES ( ) NO
	Insure Boom Length, matches the Crane Load Chart		OEM Manual	(✓) YES ( ) NO
	Insure Boom Angle measurements and readings match the boom angle indicator.		OEM Manual	(✓) YES ( ) NO
	Insure Boom Radius measurements indicate the distance from center line of the crane to the hook		OEM Manual	(✓) YES ( ) NO
	Check load cell gap 5/8 inch or +/- 1/8 inch (Daiphragm Load Cell Type)		OEM Manual	(✓) YES ( ) NO
	Check weight indicator accuracy "maximum variance +/- 2%" (Other Types)		Industry Standard	(✓) YES ( ) NO
Pedestal & Structure	Visually inspect **Pedestal** for chipped/cracked paint, deformation, worn parts, dents, corroded areas, cracks, etc.		API RP 2D	(✓) YES ( ) NO
	Visually inspect **Condition of crane structure** for chipped/cracked paint, deformation, worn parts, dents, corroded areas, cracks, etc.		API RP 2D	(✓) YES ( ) NO
Pedestal & Structure	Visually inspect **condition of box boom** for chipped/cracked paint, deformation, worn parts, dents, corroded areas, cracks, etc.		API RP 2D	(✓) YES ( ) NO
Boom & Boom Cylinders	Lubricate boom foot pins and bushings		OEM Manual	(✓) YES ( ) NO
	Lubricate boom cylinder pins, bearings and bushings		OEM Manual	(✓) YES ( ) NO
	Inspect and function test angle/radius indicator and lubricate		API RP 2D	(✓) YES ( ) NO
	Inspect entire boom for loss of protective coating and corrosion		API RP 2D	(✓) YES ( ) NO
	Inspect entire boom for chipped/cracked paint, deformation, worn parts, dents, corroded areas, cracks, etc.		API RP 2D	(✓) YES ( ) NO
	Inspect boom end connections, for bends, dents, corroded areas, cracked welds, and signs of mechanical damage, wear, etc. ****any deviation should be reported****		API RP 2D	(✓) YES ( ) NO
	Inspect boom rest and wooden support to ensure it's in good condition		API RP 2D	(✓) YES ( ) NO
	Inspect connecting pins and pin holes for excessive clearance		OEM Manual	
	BOOM CYLINDER PIN MAXIMUM TOLERANCE	1/8" (3mm)	Industry Standard	0.031 inch
	Inspect connecting bolts of box boom		OEM Manual	(✓) YES ( ) NO
	Check BOOM CYLINDERS for proper operation and good condition		API RP 2D	(✓) YES ( ) NO
	Inspect cylinder barrels and rods for leaks, mechanical damage and corrosion		Industry Standard	(✓) YES ( ) NO
	Check boom foot and connection pins for clearance		Industry Standard	
	BOOM FOOT PINS TOLERANCE	1/8" (3mm)	Industry Standard	0.045 inch
Crane Boom Lighting & Safety Net	Check condition of crane boom lighting and safety net is secured with strong point. * **Safety net should be replace 24 months after installation (2 year)***	Last installation date _____	Company Spec/Standard	(✓) YES ( ) NO
Crane Boom	Check function of crane boom lighting		Company Spec/Standard	(✓) YES ( ) NO
Wire Rope	Determine if parts-of-line match parts of line on the load chart in the crane cabin.		API RP 2D	(✓) YES ( ) NO
	Determine if visible portion of wire rope adequately lubricated. If not lubricate wire rope		API RP 2D	(✓) YES ( ) NO
	For each layer of wire rope on drum, check that all rope is parallel and each crossover point at hoist flanges is correct		API RP 2D	(✓) YES ( ) NO
	Inspect wire rope for, kinking, crushing, broken wires, necking down of rope diameter, worn outside wires, corroded or broken wires at end connection, cutting or unstringing. **Running Ropes of rotation-resistant construction used in the main or auxiliary Hoist:** - Four (4) Randomly distributed broken wires with in one (1) lay length - Two (2) broken wires in one strand within one (1) lay length		API RP 2D	(✓) YES ( ) NO
	With the boom at the highest possible angle and the main load block or overhaul ball at the water level, ensure there is a minimum of 5 wraps of wire-rope remaining on the drums. Note: (Thai law, requires minimum of 2 wraps)		API SPEC 2C / Thai Law	(✓) YES ( ) NO
	Reference: · Running rope safety factor not less than 5 for wire rope that are running wire, (Thai law; Wire rope nominal breaking strength x number parts of line / Design factor 5) · Standing rope safety factor not less than 3.5 for wire rope that are stay cables, (Thai law)		Thai Law	(✓) YES ( ) NO
	Measure and record nominal diameter of "running ropes"main and auxiliary (particularly on drum, equalizer sheave and at sockets, clips and dead end points) *******Nominal = several measurements added together divided by Number of measurements*******		API RP 2D	(✓) YES ( ) NO
	Inspect wedge sockets condition for damage, proper wedging and record size below:		API RP 2D	
	MAIN WIRE ROPE OD:	FULL DRUM	OEM Manual	0.880 inch
		HALF DRUM	OEM Manual	0.885 inch

[redacted] / 8 Nov 25.

SYSTEM	TASK		Specification	Record/Reading
	AUX WIRE ROPE OD:	WATER LEVEL	OEM Manual	0.786 inch
		FULL DRUM	OEM Manual	0.775 inch
		HALF DRUM	OEM Manual	0.775 inch
		WATER LEVEL	OEM Manual	0.775 inch
	U-bolt and Fist Grip Clips: Extreme care should be exercised to assure proper orientation of U-bolt clips. The U-bolt segment shall be in contact with the wire rope dead-end. The orientation, spacing, torquing, and number of all clips shall be in accordance with the crane manufacture's specifications.		API SPEC 2C	(✓) YES ( ) NO
Sheaves & Bearings	Lubricate all sheave bearings		API RP 2D	(✓) YES ( ) NO
	Visually inspect all sheaves and bushings for cracks, wear and deterioration		API RP 2D	(✓) YES ( ) NO
	Visually inspect wire rope track of sheave for rope imprints, wear and deterioration. If damage exist sheave should be resurfaced or replaced.		API RP 2D	(✓) YES ( ) NO
	Check wirerope guards and keepers for proper location and condition.		API RP 2D	(✓) YES ( ) NO
	Determine if wire rope is jumping the sheaves, by looking for signs of damage on the sheave brim		Industry Standard	(✓) YES ( ) NO
	Determine if wire rope size and sheave sizes/grooves are compatible and record size. Sheave pitch diameter (D) to nominal wire rope diameter (d) ratio (D/d) shall not be less than 18:1		API SPEC 2C	(✓) YES ( ) NO
	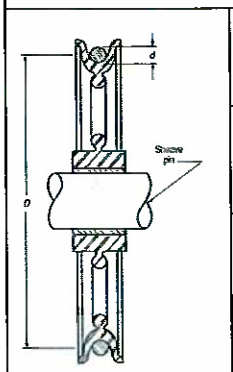 MAIN POINT SHEAVES:	SHEAVE D / WIRE ROPE d = >18	API SPEC 2C	18 inch (D) 7/8 inch (d) 18 (Ratio D/d)
	AUX SHEAVES:	SHEAVE D / WIRE ROPE d = >18	API SPEC 2C	18 inch (D) 3/4 inch (d) 20 (Ratio D/d)
	IDLER SHEAVES:	SHEAVE D / WIRE ROPE d = > 18 (If applicable)	API SPEC 2C	18 inch (D) 7/8 inch (d) 18 (Ratio D/d)
	MAIN BLOCK SHEAVES:	SHEAVE D / WIRE ROPE d = > 16	API SPEC 2C	18 inch (D) 7/8 inch (d) 18 (Ratio D/d)
Load Block	Load Block: Inspect the load block for cleanliness, binding sheaves, damaged or worn sheaves, worn or distorted sheave pins, broken bolts, and worn cheek weights.		Industry Standard	(✓) YES ( ) NO
	Hook: Inspect the hook damage, excessive wear to the hook safety latch, hook swivel trunnions, thrust collar, securing, damage or missing lubrication fittings, proper lubrication, cracks and gouges, and if visibly bent or twisted or has been exposed to welding or arching.		Industry Standard	(✓) YES ( ) NO
	Inspect rope track worn in sheave groove, sheave must be resurface or replace		API RP 2D	(✓) YES ( ) NO
	Check wire rope guard or cable keepers at all sheave location for properly condition		API RP 2D	(✓) YES ( ) NO
	Ensure the load block is not using "Cast Iron" cheek weights they can not be used as per API		API SPEC 2C	(✓) YES ( ) NO
	Determine if all hooks are equipped with properly operating safety latches and check for proper functioning		API RP 2D	(✓) YES ( ) NO
	Lubricate sheave bearings and swivels		OEM Manual	(✓) YES ( ) NO
	RECORD LOAD BLOCK INFORMATION :	Manufacturer:	OEM Manual	American Aero
		Model:	OEM Manual	–
		Serial Number:	OEM Manual	98-8818
	Record Load block measurements and details for future comparison with historical data ☐		Industry Standard	( ) YES ( ) NO
	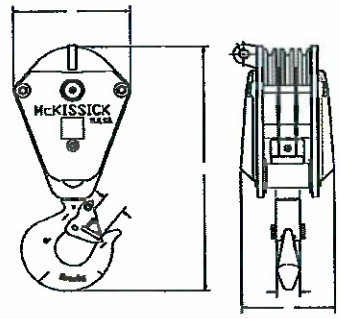	A - Block OD	Industry Standard	23 inch
		B - Block length	Industry Standard	40 inch
		C - Center of Pin to hook Saddle	Industry Standard	33 inch
		D1 - Sheave Diameter	Industry Standard	16 inch
		E - Block Width	Industry Standard	13 inch
		F - Throat Opening	Industry Standard	7 inch
		G - Trunnion	Industry Standard	0.030 inch
Aux Ball	Inspect Auxiliary ball for cleanliness, binding swivel, work pad-eye hole. Inspect the hook damage, excessive wear to the hook safety latch, hook swivel trunnions, thrust collar, securing, damage or missing lubrication fittings, proper lubrication, cracks and gouges, and if visibly bent or twisted or has been exposed to welding or arching.		Industry Standard	(✓) YES ( ) NO
	All hooks that lift personnel are to have a positive locking safety latch **locking Pin to be used while lifting personnel**		API RP 2D	(✓) YES ( ) NO
	RECORD AUX BALL INFORMATION :	Manufacturer:	OEM Manual	Johnson
		Model:	OEM Manual	OR7EE 200-4
		Serial Number:	OEM Manual	95-1727

[redacted] / 8 Nov 25.

SYSTEM	TASK		Specification	Record/Reading
	Record Auxiliary Ball measurements and details for future comparison with historical data:		Industry Standard	
	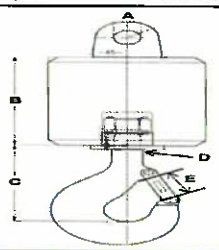	A - Pad eye	Industry Standard	1.5 inch
		B - Block length	Industry Standard	12 inch
		C - Hook Length	Industry Standard	9 inch
		D- Trunnion	Industry Standard	0.012 inch
		E -Throat Opening	Industry Standard	3.5 inch
Safety system	Check Condition anti - two block , hanging chain ,eye bolts , fix bolts , shackle for missing , corrosion , erosion , deformation		API RP 2D	(✓) YES ( ) NO
	Check anti - two block kick out plate for freely movement		Industry Standard	(✓) YES ( ) NO
	Check anti-2-block device proper function and hanging chain distance 10 ft. normal designed of Main Hoist ** *Note; When the block strikes the hanging weight or hanging valve the hoist should stop completely within 12 in. to 18 in. (30.5 cm to 45.7 cm) or at worst creep up slowly.*		API RP 2D	(✓) Function ( ) False
	Check anti-2-block device proper function and hanging chain distance 10 ft. normal designed of Auxiliary Hoist ** *Note; When the block strikes the hanging weight or hanging valve the hoist should stop completely within 12 in. to 18 in. (30.5 cm to 45.7 cm) or at worst creep up slowly.*		API RP 2D	(✓) Function ( ) False
	Take off and Clean up boom high angle limit stopoer and Activate to free movement		API RP 2D	(✓) YES ( ) NO
	Check function to ensure that boom cannot lower down when anti-2-block of Main and Aux activate		API RP 2D	( ) Function (✓) False N/A
	Check relation of boom radius and boom angle (lowest, middle, highest) with refrence to load chart.		API RP 2D	(✓) YES ( ) NO
	Visually check condition of emergency lowering tool and procedure on site Visually check emergency load lowering kit. Ensure EMERGENCY LOWERING PROCEDURE and MATERIAL LIST are in the box. - Ensure ALL items shown on the list are in the box and in good condition - **SECURE THE BOX WITH A TIE WRAP.**		Company Spec/Standard	(✓) YES ( ) NO
Slew mechanism	Grease all general grease points of slew ring (bearing)		OEM Manual	(✓) YES ( ) NO
	Grease open gears (pinion)		OEM Manual	(✓) YES ( ) NO
	Check for damage and excessive wear on gear teeth		OEM Manual	(✓) YES ( ) NO
	Check slew gear box in the area of oil seal and check for any leaks		API RP 2D	(✓) YES ( ) NO
	CHECK and RE-TORQUE swing drive gearbox mounting bolts at following brands: - ESKRIDGE, Model: 250 = 150 FT-LBS		API RP 2D	150 FT-LBS
	Check swing gearbox oil level/condition, top up if required	Omala 220	OEM Manual	(✓) YES ( ) NO
	Monitor slew gearbox oil condition by visually examine for burnt smell, metal particles, and/or other contaminants, record and change if found.		OEM Manual	( ) CHANGE OIL (✓) NOT CHANGE OIL
	Change slew gear box oil (Every 1 yr)		OEM Manual	( ) CHANGE OIL (✓) NOT CHANGE OIL
	Check swing drive static parking brake for proper operation Caution: **DO NOT stop the swing of the crane with this static brake (parking brake)**		OEM Manual	(✓) YES ( ) NO
	Rotate crane 360 degree and check smoothness of operation		OEM Manual	(✓) YES ( ) NO
	Function test Dynamic brake while slewing the crane		OEM Manual	(✓) YES ( ) NO
	Check condition of slew ring bolts e.g. Bolt grade and washers. **Caution:** Use only hardened flat washers under head of bolt. Do not use lock washers, or regular flat washers.		Industry Standard	(✓) YES ( ) NO
	Monitor ball-ring grease sample. If found wear and tear particles, take sample and send to lab.		Company Spec/Standard	( ) SEND TO LAB (✓) NOT SEND TO LAB
	Rotate crane 360 degree and check smoothness of operation		OEM Manual	(✓) YES ( ) NO
	Check swing drive static parking brake for proper operation Caution: **DO NOT stop the swing of the crane with this static brake (parking brake)**		OEM Manual	(✓) YES ( ) NO
	Check swing lock mechanism and Cylinder condition; leak, corrosion ,dent , loos all part,worn and wear		OEM Manual	(✓) YES ( ) NO
	Check swing lock mechanism freely lock and unlock for function		OEM Manual	(✓) YES ( ) NO
	Verify crane condition and load test as separate procedure. **Table 1—Static/Onboard Test Load and Radius** Static/Onboard Rated Load at a Specific Radius lb (kg) / Test Loads in Excess of Static/Onboard Rated Load at a Specific Radius ≤ 40,000 (18,144) / 25 % > 40,000 ≤ 100,000 (>18,144 ≤ 45,356) / 10,000 lb (4536 kg) > 100,000 (45,356) / 10 %		API 2C	(✓) YES ( ) NO
	Verify crane condition and load test as separate procedure.		ปจ.1	(✓) YES ( ) NO

Risk Level Definitions: The following 3 levels indicate the impact the noted deficiency poses to the operation or structural integrity of the equipment:

[redacted] / 8 Nov 25

SYSTEM	TASK	Specification	Record/Reading
Level 1 = Incidental	Level #2 = Restricted Operation	Level #3 =Out of Service	
Minor deficiency that is recommended to be promptly addressed, but poses no safety and/or environmental risk. The crane can still be operated at full duty.	Deficiency identified that has the potential to limit, de-rate or damage the crane, its surroundings and/or the environment. The duty and locked/ tagged out until the crane's duty and operation should be de-rated or service restricted.	The crane should be removed from duty and locked/ tagged out until the deficiency is rectified.	

System:	Risk Level:	Component:		In Accordance with:	
		Location:		Date Originated:	
Description:					
Recommended					
Recommended urgency timeframe for corrective action:			Completed Date:	Completed By:	

System:	Risk Level:	Component:		In Accordance with:	
		Location:		Date Originated:	
Description:					
Recommended					
Recommended urgency timeframe for corrective action:			Completed Date:	Completed By:	

System:	Risk Level:	Component:		In Accordance with:	
		Location:		Date Originated:	
Description:					
Recommended					
Recommended urgency timeframe for corrective action:			Completed Date:	Completed By:	

System:	Risk Level:	Component:		In Accordance with:	
		Location:		Date Originated:	
Description:					
Recommended					
Recommended urgency timeframe for corrective action:			Completed Date:	Completed By:	

System:	Risk Level:	Component:		In Accordance with:	
		Location:		Date Originated:	
Description:					
Recommended					
Recommended urgency timeframe for corrective action:			Completed Date:	Completed By:	

System:	Risk Level:	Component:		In Accordance with:	
		Location:		Date Originated:	
Description:					
Recommended					
Recommended urgency timeframe for corrective action:			Completed Date:	Completed By:	

System:	Risk Level:	Component:		In Accordance with:	
		Location:		Date Originated:	
Description:					
Recommended					

SYSTEM	TASK		Specification		Record/Reading
Recommended urgency timeframe for corrective action:		Completed Date:		Completed By:	

Job Completed By

[redacted]

7 Nov 25

CRANE MAKE : Nautilus
MODEL: 180B1-80
SERIAL NUMBER :

LOCATION
BEWB

DATA BASE - PM JOB TASK CARD
WO: 1264127

Crew Size: 4
Estimated Hours: 11

SYSTEM	TASK		Specification	Record/Reading
Safety	Perform Job Safety Analysis (JSA)		Company Spec/Standard	(✓) YES ( ) NO
	Obtain "COMPANY' PERMIT TO WORK		Company Spec/Standard	(✓) YES ( ) NO
	Perform Tool Box Talk		Company Spec/Standard	(✓) YES ( ) NO
	BEFORE/AFTER JOB EXECUTION: Ensure to comply with isolation procedure (LOCK OUT/TAG OUT, WARNING SIGNS and BARRIERS).		Company Spec/Standard	(✓) YES ( ) NO
Required Tools	Insure proper tools are available at the job site		Company Spec/Standard	(✓) YES ( ) NO
	Tool bag		Company Spec/Standard	(✓) YES ( ) NO
	Tool box		Company Spec/Standard	(✓) YES ( ) NO
	Tool Container		Company Spec/Standard	(✓) YES ( ) NO
	MPI equipment		Company Spec/Standard	(✓) YES ( ) NO
	Check safety harness Software and Hardware should be good condition before use		Company Spec/Standard	(✓) YES ( ) NO
	Check Rescue Equipment ready to use onsite		Company Spec/Standard	(✓) YES ( ) NO
	Portable Scaffolding and Crew if require		Company Spec/Standard	(✓) YES ( ) NO
Lubricants	Insure proper lubricants and consumables are available at the job site.		Company Spec/Standard	(✓) YES ( ) NO
	Hydraulic System - Hydraulic Oil	Rando HD-68	OEM Manual	(✓) YES ( ) NO
	Slew Gearbox - Gear Oil	Meropa 220	OEM Manual	(✓) YES ( ) NO
	Auxiliary Hoist - Gear Oil	Meropa 220	OEM Manual	(✓) YES ( ) NO
	Main Hoist - Gear Oil	Meropa 220	OEM Manual	(✓) YES ( ) NO
	Grease Points - Lithium Based **IT MUST NOT INCLUDE MOLYBDENUM DISULPHIDE**	MULTIFAK EP#2	OEM Manual	(✓) YES ( ) NO
	Open Gear Teeth - Open Gear Lube highly water resistant and of an adhesive nature.	OMEGA 73	OEM Manual	(✓) YES ( ) NO
	Wire rope Lubricant Company preferred grade	Birlube 70	OEM Manual	(✓) YES ( ) NO
	Engine Oil - SAE Grade 15W-40 (Delo Gold)	15W-40	OEM Manual	(✓) YES ( ) NO
	Safe Load Indicator fluid	W-15	OEM Manual	(✓) YES ( ) NO
	Engine Radiator - Should have radiator preservatives additives	Cat® SCA	OEM Manual	(✓) YES ( ) NO
Consumables	Spray Cold Galvanize		Company Spec/Standard	(✓) YES ( ) NO
	Denso Tape		Company Spec/Standard	(✓) YES ( ) NO
	WD-40		Company Spec/Standard	(✓) YES ( ) NO
History Review	Before starting work, tasks preparation at least 1 day prior to starting work: 1. Review history winch gear inspection and boom replacement 2. Review last PM/ CM/ PMI from Crane Mech, 3. List out all punch list and prepare parts. 4. Review last Certificate task performed		API RP 2D	(✓) YES ( ) NO
	Require to update part history from Crane Mech on following main compenents to ensure the right parts are prepared: - Aux/ Main/ Boom Cylinder, Engine, Swing Gearbox, etc. **Reference:** Crane OEM information of each part need to be recorded - Manufacturer & Contact info - Model & serial number - Installation date		Company Spec/Standard	(✓) YES ( ) NO
	Review history data from Certificates and incorporate into current PM: - Pull Test Certificates (ongoing update, 4 yr. history). - Load Test Certificates (ongoing update, 4 yr. history). - Wire Rope Certifications (running rope and standing rope) (life of rope). - Hoist Certifications for hoist classified as "personnel handling" hoist.		API RP 2D	(✓) YES ( ) NO
	Review Last Preventative Maintenance Records (Inspection Reports) - Pre-use (Pre-Post Inspection) - 6 Monthly (API RP 2D Not Defined, Company Standard) - 1 Yearly (API RP 2D Defined Annual Inspection)		API RP 2D	(✓) YES ( ) NO
Lifting Gear Preparation	Visually Inspect (Sling, sling hooks and shackles) include Websling / Chain		Company Spec/Standard	(✓) YES ( ) NO
	Check color code / Tag & date inspection		Company Spec/Standard	(✓) YES ( ) NO
General	Determine if access route to-from crane is clean, safe, unobstructed and adequately protected against falls, tripping and slipping		Company Spec/Standard	(✓) YES ( ) NO
	Check drain lines and drip pans for deterioration		API RP 2D	(✓) YES ( ) NO
	Remove any sediment collected in the bottom of drip pans		Industry Standard	(✓) YES ( ) NO
	Check for general crane and components for loss of protective coating and corrosion		Industry Standard	(✓) YES ( ) NO
	Check for missing or loose ,corrosion, deformation pins, pin keepers, bolts, nuts, fasteners of all laders, cages and working platform		API RP 2D	(✓) YES ( ) NO
	Apply grease to exposed grease parts (control valve spools, ball-ring gear, parking brake valve, etc.)		OEM Manual	(✓) YES ( ) NO
Prime Mover	Engine CATERPILLAR		OEM Manual	
	CATERPILLAR MODEL □ 3304DI	S/N.:	OEM Manual	83Z10674
		ARR.No.:	OEM Manual	
	Check lube oil level and condition, top up / replace if required		OEM Manual	(✓) YES ( ) NO
	Check diesel tank level, top up if required.		OEM Manual	(✓) YES ( ) NO
	Check/Clean crankcase breather cap		OEM Manual	(✓) YES ( ) NO
	Check/Clean air cleaner		OEM Manual	(✓) YES ( ) NO
	Check Condition of radiator / clean radiator cap		OEM Manual	(✓) YES ( ) NO
	Check for any signs of leaks on or around the engine ie; Crankshaft seal (front /rear)		OEM Manual	(✓) YES ( ) NO
	Check for engine exhaust system for leaks, corrosion, insulation and general condition		OEM Manual	(✓) YES ( ) NO
	Check all engine hoses for wear and deterioration		OEM Manual	(✓) YES ( ) NO
	Drain water and sediment form diesel tank		OEM Manual	(✓) YES ( ) NO
	Lubricate fan bearing/shaft		OEM Manual	(✓) YES ( ) NO
	Determine if engine hour meter is working and giving accurate measurements and record:		OEM Manual	
	HOUR METER PARAMETERS: LAST READING 4779 HRS		CURRENT READING	4246 HRS

[redacted] / 7 Nov 25

SYSTEM	TASK			Specification	Record/Reading
	Check condition of engine hold down bolts			OEM Manual	(✓) YES ( ) NO
	Check condition fan blade			OEM Manual	(✓) YES ( ) NO
	Check belts for wear and looseness. If necessary, replace or adjust. To check belt Tension, apply 110 N (25 lbs) of force midway between the pulleys. Correctly adjusted belts with deflect 13 to 19 mm (1/2 to 3/4 inch).			OEM Manual	(✓) YES ( ) NO
	Check engine starter drive gear bendix and fly wheel gear teeth condition and record. **Replace if required"			OEM Manual	(✓) YES ( ) NO Bendix Gear : 85 % Fly wheel Gear teeth : 90 %
	Check condition Rachet of Bendix HYD Starter			OEM Manual	Rachet: 85 %
	Lubricate and excercise engine throttle linkage, if applicable			OEM Manual	(✓) YES ( ) NO
	Determine if the tachometer operates properly: Record Value of Idle & Max Speed (RPMs) Note: Too low Idle (RPMS) will cause excessive worn at winch break			OEM Manual	
	ENGINE RPM SPECIFIC**	IDLE SPEED	850-950 RPM	OEM Manual	850 RPM
		MAX SPEED	2200 RPM	OEM Manual	2200 RPM
	Confirm engine oil pressure as per Parameters below and Record Value:			OEM Manual	
	ENGINE OIL PRESSURE SPECIFIC**	Minimum	30 PSI	OEM Manual	30 PSI
		Maximum	70 PSI	OEM Manual	70 PSI
	Confirm engine fuel pressure Parameters are correct and Record Value:			OEM Manual	
	ENGINE 3304 DI FUEL PRESSURE SPECIFIC** * *Note;Fuel pressure at high idle is lower than 105 kPa (15 psi)RAMETERS	Normal	Green Range/ 15 PSI	OEM Manual	(✓) YES ( ) NO
	Confirm engine temperature Parameters and Record Value:			OEM Manual	
	ENGINE CAT 3304 DI WATER TEMP PARAMETERS	NORMAL	120 - 180 degrees F	OEM Manual	160 F
	Test engine SAFETY DEVICE- ensure engine kill cable shuts off FUEL supply			API RP 2D	(✓) Function ( ) False
	Check / Clean primary fuel *Replace if required*			OEM Manual	(✓) YES ( ) NO
	Check condition of turbocharger, and for any oil or hot air leaks			OEM Manual	( ) Leak (✓) Not Leak
	Change engine lube oil and oil filter			OEM Manual	(✓) YES ( ) NO
	Change fuel filter			OEM Manual	(✓) YES ( ) NO
	Evaluate engine performance, tune up if required			Company Spec/Standard	(✓) YES ( ) NO
Hydraulic Start System (Apply for C2-Remote P/F Only)	**Check pressure system** at the pressure gauge which should reach 3,000 PSI as standard when the system is FULLY charged. Record Value. (As the system cools down, the pressure should drop slightly and finally stabilised.)			OEM Manual	(✓) YES ( ) NO
	Visually inspect all hydraulic connections and hoses for leaks and retighten if necessary. (Caution: This should NOT be done if the system is under pressure.) 1. Slowly release system pressure by loosening the bleed screw on top of the hand pump. 2. Ensure no pressure remains, retighten the suspected leak fitting or replace the damaged hose or component. 3. Retighten the bleed screw on the hand pump. 4. Pump the system up to 2200 - 2600 PSI 5. Inspect that the leak was eliminated.			OEM Manual	(✓) YES ( ) NO
	Function check Accumulator Pre-charge. (Caution: This should NOT be done if the system is under pressure.) 1. Shut the engine off, release system pressure via the bleed screw on top of the hand pump 2. Retighten bleed screw and actuate the hand pump. The pressure will rapidly increase and then stabilised. This pressure is related to accumulator gas pre-charge pressure. 4. If the pressure rapidly increase to 3000 PSI, it indicates that the accumulator has lost its gas charge. 5. Troubleshoot as necessary			OEM Manual	(✓) YES ( ) NO
	Check the unloading valve integrity with the engine running. 1. Slowly release system pressure by loosening the bleed screw on top of the hand pump. 2. Tighten bleed screw on top of hand pump and notice pressure in system will increase. 3. This pressure should read between 2200 - 2600 PSI depending on the recharge ratio 80% std. (90% optional). Record Pressure Value.			OEM Manual	2500 PSI
	Check Nitrogen pressure in Accumulator ***Note**spec @ 1,500 psi as follow schematic and if found pressure loss below 1400 PSI then prepare recharge nitrogen in system			OEM Manual	1500 PSI
Hoist / Brakes	Visually check a hoist exhibits erratic operation and/or unusual noise, the hoist must be taken out of service until it is inspected and serviced by a qualified technician. Continued operation of a hoist with a defect in a critical component may lead to loss of load control, property damage, serious injury or death.			OEM Manual	(✓) YES ( ) NO
	Visual exteriors of hoist, frames, drums and flanges for damage, leaks, cracks and wear and repair/replace as required to maintain the structural integrity of the hoist.			OEM Manual	(✓) YES ( ) NO
	Check all hoist mounting pins, bolts or other fasteners and replace or tighten as necessary.			OEM Manual	(✓) YES ( ) NO
	Lubricant level must be maintained between the minimum and maximum levels; midway up sight glass or at bottom of level plug port as equipped and check/clean plug vent. Use only the recommended type of lubricant.			OEM Manual	(✓) YES ( ) NO
	Check for external oil leaks and repair as necessary. This is extremely important due to the accelerated wear that will result from insufficient lubricating oil in the hoist.			OEM Manual	(✓) YES ( ) NO
	RECORD BOOM CYLINDER INFORMATION :	Boom cylinder Diameter:		OEM Manual	DIA: 12 Inch
		CY Number:		OEM Manual	L= 6011-1 R= 6011-2
		Serial Number:		OEM Manual	L= 2430 R= 2419
	RECORD MAIN HOIST INFORMATION :	Manufacturer:		OEM Manual	Braden
		Model:		OEM Manual	CH 185A-SPL-36120-01-1

[redacted] / 7 Nov 2005

SYSTEM	TASK			Specification	Record/Reading
			Serial Number:	OEM Manual	
	Check MAIN HOIST for proper operation and good condition			API RP 2D	(✓) YES ( ) NO
	Brake test & record pressure of MAIN HOIST			OEM Manual	(✓) YES ( ) NO
	Check MAIN HOIST gear oil level/condition, top up if required. ** Refer to Onsite Gear Oil Sample Procedure ** ** Replace and send oil sample to SKL if abnormal ** ** Take photo of Oil Sampling for Reference**			OEM Manual	(✓) YES ( ) NO
	RECORD AUXILIARY HOIST INFORMATION :		Manufacturer:	OEM Manual	Braden
			Model:	OEM Manual	PD15B-41064-04-1
			Serial Number:	Inspector's Assessment	0955191
	Check AUXILIARY HOIST for proper operation and good condition			API RP 2D	(✓) YES ( ) NO
	Brake test & record pressure of AUXILIARY HOIST			API RP 2D	(✓) YES ( ) NO
	Check AUXILIARY HOIST gear oil level/condition, top up if required. ** Refer to Onsite Gear Oil Sample Procedure ** ** Replace and send oil sample to SKL if abnormal ** ** Take photo of Oil Sampling for Reference**			OEM Manual	(✓) YES ( ) NO
	Check Relief Valve: Determine hoistes' relief valve pressure gauge is working and giving accurate measurement by notice whether pressure gauge is vibrating or not. If not, set relief valve pressure in accordance with the schematic and parameters below. Record all readings.			OEM Manual	(✓) YES ( ) NO
	BOOM RELIEF VALVE TEST	Relief Specific:	2,700 PSI	OEM Manual	2700 PSI
	MAIN HOIST RELIEF VALVE TEST	Relief Specific:	2,500 PSI	OEM Manual	2500 PSI
	AUX HOIST RELIEF VALVE TEST	Relief Specific:	2,500 PSI	OEM Manual	2500 PSI
	SWING RELIEF VALVE TEST	Relief Specific:	1,200 PSI	OEM Manual	1200 PSI
	Measure Pressure of hoist motor case drains and Record Value **Reference Bulletin**: BRADEN Inspection, Testing, Preventive Maintenance and Special Operating Instructions For Planetary Hoists PB-308 latest edition for further details.			OEM Manual	
	MAIN HOIST CASE DRAIN for Gear Motor (Down Mode).	PRESSURE	< 100 psi	Company Spec/Standard	15 PSI
	AUX. HOIST CASE DRAIN for Gear Motor (Down Mode).	PRESSURE	< 100 psi	Company Spec/Standard	10 PSI
Hydraulic System	Check hydraulic tank oil level. Oil should be visible in the sight glass. Top up as required (3/4 Tank Minimum)			OEM Manual	(✓) YES ( ) NO
	Check hydraulic oil condition. (Check if running hours are more than 100 hours from last oil change or during Annual inspection) ** Refer to Onsite Hydraulic Oil Sample Procedure ** ** Replace and send oil sample to SKL if abnormal ** ** Take photo of Oil Sampling for Reference**		Rando HD-68	Company Spec/Standard	(✓) YES ( ) NO
	Drain off 1 liter of oil to remove condensed water. If water is present, drain until water is removed and top up with clean oil			Industry Standard	(✓) YES ( ) NO
	Check for any hydraulic leaks			Industry Standard	(✓) YES ( ) NO
	Check the hydraulic hose, piping and tubing for mechanical damage, corrosion, splits, blisters, cracking or excessive abrasion on the outer surface			API RP 2D	(✓) YES ( ) NO
	Check that all hydraulic hose connections are sound and that all mounting and pivoting connections are secure.			Industry Standard	(✓) YES ( ) NO
	Lubricate hydraulic swivel in pedestal and insure tie down restrains are in place and preventing the swivel from rotating with the crane structure.			OEM Manual	(✓) YES ( ) NO
	Ensure the filler breather on tank is not covered or clogged			Industry Standard	(✓) YES ( ) NO
	Visually inspect for missing or loose pins, pin keepers, bolts, nuts, fasteners on all pumps, motors and valves			API RP 2D	(✓) YES ( ) NO
	* Re-tighten the stud bolt of hydraulic main pump and marking the nut for checking to prevent loosening. Note : Torqe spec model P76, P75, PGP/PGM350 ,PGP/PGM330 = 200 ft-lbs. , for model PGP/PGM315 = 140 ft-lbs. and PGP/PGM365 = 450 ft-lbs.			The Commercial Intertech manual	(✓) YES ( ) NO
	Check the filter bypass indicator, while engine is running			OEM Manual	(✓) YES ( ) NO
	With engine running (after all other items pass inspection), check the system for leaks around fittings, hoses, valves and reservoirs			Industry Standard	(✓) YES ( ) NO
	With engine running, check the source of any unusual noise or vibration that may cause or indicate equipment damage or wear			Industry Standard	(✓) YES ( ) NO
	Ensure all hoses are properly rated for the system, see "Parameters" for each system for details.			Industry Standard	(✓) YES ( ) NO
	Record hydraulic oil operating temperture. Note: Hydraulic fluid overheating temperature is over 180 F degrees or 82 C, degrees (reservoir temperature)			Industry Standard	130 Degree F
	Determine if hydraulic return pressure gauge is working and giving accurate measurements. Record readings				
	RECORD HYDRAULIC RETURN PRESSURE PARAMETERS:		60 PSI "maximum"	OEM Manual	20 PSI
	Test all hydraulic relief valves and record pressures with engine at :		2200 RPM	API RP 2D	
	BOOM FUNCTION TEST (Need Crane Mech to verify each platform)			OEM Manual	
	Boom Angle : 60 Degree (Recommend or as applicable)	UP	Cracking pressure	RECORD	OEM Manual 600 PSI
			Full Speed Pressure	RECORD	OEM Manual 800 PSI
		DOWN	Cracking pressure	RECORD	OEM Manual 800 PSI
			Full Speed Pressure	RECORD	OEM Manual 1400 PSI
	MAIN HOIST FUNCTION TEST (Need Crane Mech to verify each platform)			OEM Manual	

[redacted] / 4 Nov 20.

SYSTEM	TASK				Specification	Record/Reading
	Boom Angle : 60 Degree (Recommend or as applicable)	UP	Cracking pressure	RECORD	OEM Manual	100 PSI
			Full Speed Pressure	RECORD	OEM Manual	600 PSI
		DOWN	Cracking pressure	RECORD	OEM Manual	700 PSI
			Full Speed Pressure	RECORD	OEM Manual	1500 PSI
	AUX HOIST FUNCTION TEST (Need Crane Mech to verify each platform)				OEM Manual	
	Boom Angle : 60 Degree (Recommend or as applicable)	UP	Cracking pressure	RECORD	OEM Manual	100 PSI
			Full Speed Pressure	RECORD	OEM Manual	500 PSI
		DOWN	Cracking pressure	RECORD	OEM Manual	600 PSI
			Full Speed Pressure	RECORD	OEM Manual	1300 PSI
	SWING FUNCTION TEST (Need Crane Mech to verify each platform)				OEM Manual	
	Via cross over relief valve, from Boom Control valve Boom Angle : 60 Degree (Recommend or as applicable)	LEFT	Cracking pressure	RECORD	OEM Manual	100 PSI
			Full Speed Pressure	RECORD	OEM Manual	500 PSI
		RIGHT	Cracking pressure	RECORD	OEM Manual	100 PSI
			Full Speed Pressure	RECORD	OEM Manual	500 PSI
	Measure flow rate of Hydraulic pump if required and record results:			GPM	Company Spec/Standard	GPM
	BOOM PUMP FLOW RATE		0 PSI	RECORD	OEM Manual	50 GPM
			700 PSI	RECORD	OEM Manual	45 GPM
			1400 PSI	RECORD	OEM Manual	48 GPM
			2100 PSI	RECORD	OEM Manual	50 GPM
			2700 PSI	54 GPM	OEM Manual	50 GPM
	MAIN PUMP FLOW RATE (54+37.5)		0 PSI =	RECORD	OEM Manual	36 GPM
			700 PSI	RECORD	OEM Manual	36 GPM
			1400 PSI	RECORD	OEM Manual	36 GPM
			2100 PSI	RECORD	OEM Manual	35 GPM
			2500 PSI	37.5.0 GPM	OEM Manual	35 GPM
	AUX PUMP FLOW RATE		0 PSI =	RECORD	OEM Manual	57 GPM
			700 PSI	RECORD	OEM Manual	50 GPM
			1400 PSI	RECORD	OEM Manual	56 GPM
			2100 PSI	RECORD	OEM Manual	57 GPM
			2500 PSI	54.0 GPM	OEM Manual	57 GPM
	SWING PUMP FLOW RATE		0 PSI =	RECORD	OEM Manual	34 GPM
			700 PSI	RECORD	OEM Manual	34 GPM
			1,200 PSI	34.0 GPM	OEM Manual	34 GPM
Electrical system and Crane Boom Lighting	Check the electrical junction boxes, wires and connections for deterioration, desiccant bags, (replace as required)				Industry Standard	(✓) YES ( ) NO
	Check the condition of the grounding and lighting protection system.				Company Spec/Standard	(✓) YES ( ) NO
	Visually inspect boom floodlight and light guards for loose, missing, corroded				Company Spec/Standard	(✓) YES ( ) NO
	Check condition pipe support , U-bolt ,nuts of boom floodlight and Electric slipring for loose , missing , corroded				Company Spec/Standard	(✓) YES ( ) NO
	Check Electric slipring/swivel for 360° continuous rotation				OEM Munnal	(✓) YES ( ) NO
	Check Water ingress, condensation in electric slipring and boom floodlight				OEM Munnal	(✓) YES ( ) NO
	Check feely movement and lubricate of boom floodlight				OEM Munnal	(✓) YES ( ) NO
	With generator in operation, intergize all lights to unsure proper function.				API RP 2D	(✓) YES ( ) NO
	Check condition of crane boom lighting and safety net is secured with strong point. * **Safety net should be replace 24 months after installation (2 year)***		Last installation date _____		Company Spec/Standard	(✓) YES ( ) NO
	Check function of crane sound signal				Company Spec/Standard	( ) YES (✓) N/A ( ) NO
	Check function of crane boom lighting at boom upper section				Company Spec/Standard	(✓) YES ( ) N/A ( ) NO
	Check function of crane boom lighting at boom lower section				Company Spec/Standard	(✓) YES ( ) N/A ( ) NO
	Check function of crane boom lighting at winch skid				Company Spec/Standard	(✓) YES ( ) N/A ( ) NO
	Check function of crane boom lighting at crane cabin				Company Spec/Standard	(✓) YES ( ) N/A ( ) NO
	Check function becon light at boom tip				Company Spec/Standard	(✓) YES ( ) N/A ( ) NO
	Inspection wire rope guide & Roller assembly				Company Spec/Standard	(✓) YES ( ) NO
Operator Control Station	Check general condition of control panel, bolts, paint security, etc.				API RP 2D	(✓) YES ( ) NO
Operator Control Station	Determine if there is a serviceable fire extinguisher in the vicinity of the crane				Company Spec/Standard	(✓) YES ( ) NO

[redacted] / 7 Nov 2026

SYSTEM	TASK	Specification	Record/Reading
	Determine if correct load chart is in use and easily visible for operator	API RP 2D	(✓) YES ( ) NO
	Determine if charts, indicators and hand signal chart are in the cabling and firmly attached	API RP 2D	(✓) YES ( ) NO
	Determine if angle/radius indicator plate is easily visible to operator and is moving freely.	API RP 2D	(✓) YES ( ) NO
	Check condition of control levers and determine if they "dead-man" back to the neutral position.	API RP 2D	(✓) YES ( ) NO
	Check condition of pressure gauges.	API RP 2D	(✓) YES ( ) NO
	Check proper control labels are firmly installed, completely legible and properly labeled	API RP 2D	(✓) YES ( ) NO
	Check controls for freedom-of-movement	API RP 2D	(✓) YES ( ) NO
	Check all safety glass and rubber seal for proper condition	API RP 2D	(✓) YES ( ) NO
Load Indicator System	Visual check on fittings and connections for leaks. Fix leak if any.	OEM Manual	(✓) YES ( ) NO
	Change Load cell fluid	OEM Manual	(✓) YES ( ) NO
	Check general condition of tubbing, hoses, pins bolts, paint, etc.	Industry Standard	(✓) YES ( ) NO
	Insure load cell is free of obstructions	OEM Manual	(✓) YES ( ) NO
	Check condition of gauge(s) face and clean glass as required.	OEM Manual	(✓) YES ( ) NO
	Check weight indicator function (Main)	Company Spec/Standard	(✓) YES ( ) NO
	Check weight indicator function (Aux)	Company Spec/Standard	(✓) YES ( ) NO
	Check weight indicator fluid, top up if required	Industry Standard	(✓) YES ( ) NO
	Insure Safe Working Load, matches ratings on the Crane Load Chart	OEM Manual	(✓) YES ( ) NO
	Insure Boom Length, matches the Crane Load Chart	OEM Manual	(✓) YES ( ) NO
	Insure Boom Angle measurements and readings match the boom angle indicator.	OEM Manual	(✓) YES ( ) NO
	Insure Boom Radius measurements indicate the distance from center line of the crane to the hook	OEM Manual	(✓) YES ( ) NO
	Check Main load cell gap 1/4 (0.250) inch	OEM Manual	(✓) YES ( ) NO
	Check Aux load cell gap 3/8(0.380) inch (Compression Load Cell Type)	OEM Manual	(✓) YES ( ) NO
	Check weight indicator accuracy "maximum variance +/- 2%	Industry Standard	(✓) YES ( ) NO
Pedestal & Structure	Visually check Pedestal for chipped/cracked paint, deformation, worn parts, dents, corroded areas, cracks weld, etc.	API RP 2D	(✓) YES ( ) NO
	Check water rain drain at pedestal must be not obstuct	Industry Standard	(✓) YES ( ) NO
	Check pin and cotter pin of pedestal missing , corrosion, wear, damage and exercise pin.	Industry Standard	(✓) YES ( ) NO
	Visually check **Base - Plate connection and Base hoist Structure** for chipped/cracked paint, deformation, worn parts, dents, corroded areas, cracks weld, etc.	API RP 2D	(✓) YES ( ) NO
	Check A fixed such as Handrial, Walkway, Grating, stationary structure without significant movement in response to waves and currents in normal operating conditions.	API RP 2C	(✓) YES ( ) NO
Box Boom & Luffing CYD	Check and Verify entire box boom and Boom CYD for loss of protective coating and corrosion	API RP 2D	(✓) YES ( ) NO
	Check and Verify entire box boom and Boom CYD for chipped/cracked paint, deformation, worn parts, dents, corroded areas, cracks, etc.	API RP 2D	(✓) YES ( ) NO
	Check and Verify boom end connections, for bends, dents, corroded areas, cracked welds, and signs of mechanical damage, wear, etc. ****any deviation should be reported****	API RP 2D	(✓) YES ( ) NO
	Check and Verify boom rest and wooden support to ensure it's in good condition	API RP 2D	(✓) YES ( ) NO
	Check BOOM CYLINDERS for proper operation and good condition	API RP 2D	(✓) YES ( ) NO
	Check Boom cylinder barrels and rods for leaks, mechanical damage and corrosion	Industry Standard	(✓) YES ( ) NO
	Check connecting bolts of box boom loose, corrosion, wear, damage	OEM Manual	(✓) YES ( ) NO
	Lubricate boom foot pins and bushings	OEM Manual	(✓) YES ( ) NO
	Lubricate boom cylinder pins, bearings and bushings	OEM Manual	(✓) YES ( ) NO
	Boom function test angle/radius to correction **Note; The cylinder(s) mechanism shall be capable of elevating the boom from a minimum of zero degrees to the maximum recommended boom angle.	API RP 2C	(✓) YES ( ) NO
	Operation functional test and verify Boom Creeping down **Note ; Test at angle 60 °	Industry Standard	(✓) YES ( ) NO
Wire Rope	Determine if parts-of-line match parts of line on the load chart in the crane cabin.	API RP 2D	(✓) YES ( ) NO
	Determine if visible portion of wire rope adequately lubricated. If not lubricate wire rope	API RP 2D	(✓) YES ( ) NO
	For each layer of wire rope on drum, check that all rope is parallel and each crossover point at hoist flanges is correct	API RP 2D	(✓) YES ( ) NO
	The top layer of rope must not be lower to the flange tips 2.5 in for Smooth drum,2 in for groove drum or 2.5 times of wire rope diameter	API RP 2C	(✓) YES ( ) NO
	Inspect wire rope for, kinking, crushing, broken wires, necking down of rope diameter, worn outside wires, corroded or broken wires at end connection, cutting or unstringing.	API RP 2D	(✓) YES ( ) NO
	****Note**Running Ropes of rotation-resistant construction used in the main or auxiliary Hoist:** - Four (4) Randomly distributed broken wires within 30 rope diameter - Two (2) broken wires in one stand within 6 rope diameter	API RP2D Edition 7	None
	One valley break can indicate internal rope damage requiring close inspection of this section of the rope. When one or more valley breaks are found in one lay length the rope should be retired.	API RP2D Edition 7	None
	Reductions for the rope diameter, from initial wire rope dimensional measurements, in a nonworking area (an area away from the sheaves) compared to the lowest diameter of rope measured in three working areas (areas where the rope regularly goes over a sheave) of more than the following is observed: — 3/64 in. (0.047 in.) (1.2 mm) for diameters up to and including 3/4 in. (19.1 mm); — 1/16 in. (0.062 in.) (1.6 mm) for diameters of 7/8 in. to 1-1/8 in. (22.2 mm to 28.6 mm); — 3/32 in. (0.093 in.) (0.8 mm) for diameter of 1-1/4 in. to 1-1/2 in. (31.8 mm to 38.1 mm); — For rope diameters greater than 1-1/2 in., a 5 % diameter loss from baseline measurement. —Wear of one-third the original diameter of the outside individual wires	API RP2D Edition 7	None
	Increase in the length of an individual rope lay is observed. This increase in lay length and accompanying reduction in diameter can be caused by failure of the core. This can occur more readily in ropes or rotation-resistant construction.	API RP2D Edition 7	(✓) YES ( ) NO

[redacted] / 4 Nov 25

SYSTEM	TASK		Specification	Record/Reading
	-Inspection and Verify running and standing rope from heat effect **Note; Not more than 250°C -There is evidence of heat damage from any source (i.e. engine exhaust, flare towers, stress corrosion cracking, etc.). Heat can be generated by passing a rope over a frozen or non-turning sheave, contact with structural members of the crane, improperly grounded welding leads or lightning strikes		Industry Standard	(✓) YES ( ) NO
	With the boom at the highest possible angle and the main load block or overhaul ball at the water level, ensure there is a minimum of 5 wraps of wire-rope remaining on the drums. Note: (Thai law, requires minimum of 2 wraps)		API SPEC 2C / Thai Law	(✓) YES ( ) NO
	Reference: · Running rope safety factor not less than 6 for wire rope that are running wire, (Thai law; Wire rope nominal breaking strength x number parts of line / Design factor 6) · Standing rope safety factor not less than 3.5 for wire rope that are stay cables, (Thai law)		Thai Law	(✓) YES ( ) NO
	Measure and record nominal diameter of "running ropes"main and auxiliary (particularly on drum, equalizer sheave and at sockets, clips and dead end points) *******Nominal = several measurements added together divided by Number of measurements*******		API RP 2D	(✓) YES ( ) NO
	Inspect wire rope and record size below:		API RP 2D	
	MAIN WIRE ROPE OD:	FULL DRUM	OEM Manual	0.790 inch
		HALF DRUM	OEM Manual	0.771 inch
		WATER LEVEL	OEM Manual	0.790 inch
	AUX WIRE ROPE OD:	FULL DRUM	OEM Manual	0.640 inch
		HALF DRUM	OEM Manual	0.649 inch
		WATER LEVEL	OEM Manual	0.640 inch
	U-bolt and Fist Grip Clips: Extreme care should be exercised to assure proper orientation of U-bolt clips. The U-bolt segment shall be in contact with the wire rope dead-end. The orientation, spacing, torquing, and number of all clips shall be in accordance with the crane manufacture's specifications.		API SPEC 2C	(✓) YES ( ) NO
Sheaves & Bearings	Lubricate all sheave bearings		API RP 2D	(✓) YES ( ) NO
	Visually inspect all sheaves and bushings for cracks, wear and deterioration		API RP 2D	(✓) YES ( ) NO
	Visually inspect wire rope track of sheave for rope imprints, wear and deterioration. If damage exist sheave should be resurfaced or replaced.		API RP 2D	(✓) YES ( ) NO
	Pins retained by snap rings, bolt lock shafts, plates lock should be checked for missing or loose for all		API RP 2D	(✓) YES ( ) NO
	Check wirerope guards and keepers for proper location and condition.		API RP 2D	(✓) YES ( ) NO
	Determine if wire rope is jumping the sheaves, by looking for signs of damage on the sheave brim		Industry Standard	(✓) YES ( ) NO
	Sheave Rope Profile for optimum Rope life the sheave groove profile should be correctly matched to the rope diameter		Industry Standard	(✓) YES ( ) NO
	Check rope sheave should be machine grooved to adepth of not less than 1.5 times the norminal diameter of the rope		Industry Standard	(✓) YES ( ) NO
	Ensure the sheaves are aligned and the fleet angle is correct **Remark ; Wire rope User's Manual allows 2 degree on grooved winch drum, Smooth Drum shuold be not more than 1-1/2 degree		API RP 2D	(✓) YES ( ) NO
	Determine if wire rope size and sheave sizes/grooves are compatible and record size. Sheave pitch diameter (D) to nominal wire rope diameter (d) ratio (D/d) shall not be less than 18:1		API SPEC 2C	(✓) YES ( ) NO
	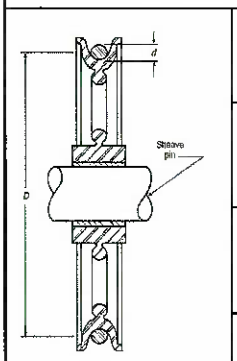	MAIN POINT SHEAVES: / SHEAVE D / WIRE ROPE d = >18	API SPEC 2C	18 inch (D) 3/4 inch (d) 24 (Ratio D/d)
		AUX SHEAVES: / SHEAVE D / WIRE ROPE d = >18	API SPEC 2C	18 inch (D) 5/7 inch (d) 27 (Ratio D/d)
		IDLER SHEAVES: / SHEAVE D / WIRE ROPE d = > 18 (If applicable)	API SPEC 2C	18 inch (D) 3/4 inch (d) 24 (Ratio D/d)
		MAIN BLOCK SHEAVES: / SHEAVE D / WIRE ROPE d = > 16	API SPEC 2C	16 inch (D) 3/4 inch (d) 22 (Ratio D/d)
Load Block	**Load Block:** Check the load block for cleanliness, binding sheaves, damaged or worn sheaves, worn or distorted sheave pins, broken bolts, and worn cheek weights.		Industry Standard	(✓) YES ( ) NO
	Hook: Check the hook damage, excessive wear to the hook safety latch, hook swivel trunnions, thrust collar, securing, damage or missing lubrication fittings, proper lubrication, cracks and gouges, and if visibly bent or twisted or has been exposed to welding or arching.		Industry Standard	(✓) YES ( ) NO
	~~**Hook:** Tip has been bent more than 10 degree out of plane from the hook body~~		Industry Standard/API RP2D7	(✓) YES ( ) NO
	Pins for bronze bushing and straight roller bearing should have a running clearnace of .031 inch/ sheave of end play and should be adjusted accordingly		Industry Standard	(✓) YES ( ) NO
	Hook or shackle to swivel case clearance is set at .031 to .062 inch, Clearance exceeding .12 to .18 (ONLY CROSBY BRAND)		OEM Crosby	(✓) YES ( ) NO

[redacted] / 7 Nov 2025

SYSTEM	TASK	Specification	Record/Reading
	OEM STANDARD RECOMMEND that Crane block removal from service untill replaced and repair following below	OEM STANDARD	
	- Elongated center pin and hook trunnion holes exceeding 5% of Original diameter	OEM STANDARD	(✓) YES ( ) NO
	-Material loss due to wear exceeding 10% of original section	OEM STANDARD	(✓) YES ( ) NO
	-Sheave wire rop groove diameter smaller than 2.5%	OEM STANDARD	(✓) YES ( ) NO
	Loosened tie bolts nuts, center pin round nuts, check weight cap screws and hook nut cap screws. Tie bolt nuts to be torqued to 35-40 ft.Lbs and restaked, all other fasteners wrench tight	OEM STANDARD	(✓) YES ( ) NO
	Throat opening - any distortion causeing an increase in throat opening of 5% not ot exceed 1/4 in. (6 mm.)(or as recommended by the manufacturer)	ASME B30.10	(✓) YES ( ) NO
	Inspect rope track worn in sheave groove, sheave must be resurface or replace	API RP 2D	(✓) YES ( ) NO
	Ensure the load block is not using **"Cast Iron"** cheek weights they can not be used as per API	API SPEC 2C	(✓) YES ( ) NO
	Determine if all hooks are equipped with properly operating safety latches and check for proper functioning	API RP 2D	(✓) YES ( ) NO
	Lubricate sheave bearings and swivels	OEM Manual	(✓) YES ( ) NO
	Re-thighten nut firmly to point at which trunion will just rotate, the Re-tighten set-screw in nut and thread condition as in the picture below,	Industry Standard	(✓) YES ( ) NO
	Last NDE inspection record	Industry Standard	Last inspect date 10 Mar 23
	RECORD LOAD BLOCK INFORMATION : Manufacturer:	OEM Manual	MCKISSICK
	Model:	OEM Manual	M035 D16H
	Serial Number:	OEM Manual	0744339
	Record Load block measurements and details for future comparison with historical data ☑	Industry Standard	(✓) YES ( ) NO
	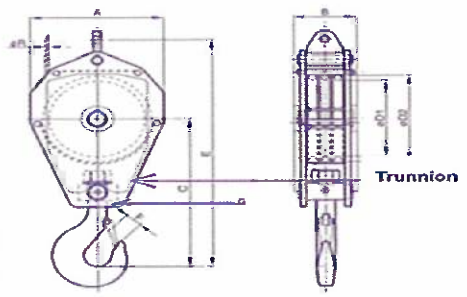 A - Block OD	Industry Standard	20 mm/ inch
	B - Block length	Industry Standard	13 mm/ inch
	C - Center of Pin to hook Saddle	Industry Standard	30 mm/ inch
	D1 - Sheave Diameter	Industry Standard	16 mm/ inch
	E - Block Width	Industry Standard	36 mm/ inch
	F - Throat Opening	Industry Standard	7 mm/ inch
	G - Trunnion	Industry Standard	0.036 mm/ inch
Aux. Ball	**Inspect Auxiliary ball** for cleanliness, binding swivel, work pad-eye hole. Inspect the hook damage, excessive wear to the hook safety latch, Bent connector plates,Severe corrosion pitting, hook swivel trunnions, thrust collar, securing, damage or missing lubrication fittings,Loose, missing or damaged retaining nuts, cotter pins or swivel set screws ,Missing or illegible rating and warning tags, proper lubrication, cracks and gouges, and if visibly bent or twisted or has been exposed to welding or arching.	Industry Standard	(✓) YES ( ) NO
	Hook: Tip has been bent more than 10 degree out of plane from the hook body	Industry Standard/API RP2D7	(✓) YES ( ) NO
	OEM STANDARD recommend that Crane overhaul ball removal from service untill replaced and repair following below	OEM STANDARD	
	- Elongated ball pin holes, hook latch pin holes and swivel eye exceeding 5% of original diameter,	OEM STANDARD	(✓) YES ( ) NO
	-Swivel end play gap exceeding .08". Excessive end play indicates damaged internal set screw	OEM STANDARD	(✓) YES ( ) NO
	-Material loss due to wear exceeding 10% of original section	OEM STANDARD	(✓) YES ( ) NO
	Throat opening - any distortion causeing an increase in throat opening of 5% not ot exceed 1/4 in. (6 mm.)(or as recommended by the manufacturer)	ASME B30.10	(✓) YES ( ) NO
	All hooks that lift personnel are to have a positive locking safety latch **locking Pin to be used while lifting personnel**	API RP 2D	(✓) YES ( ) NO
	*** Temperature Effected : When hooks are to be used at temperature above 400° F. (204°C) or below -40°F (-40°C), the hook manufacturer or a qualified person should be consulted *** Chemically Active Environment : The strength of hooks can be affected by chemically active environments, such as caustic or acid substances or fumes. The hook manufacturer or qualified person should be consulted before hooks are used in chemically active environment	ASME B30.10	
	Verify to ensure nut firmly at which trunion rotate. Identify to set-screw in nut/ swivel/ counter pin and thread condition.	Industry Standard	(✓) YES ( ) NO
	Last NDE inspection record	Industry Standard	Last inspect date 10 Mar 23
	RECORD AUX BALL INFORMATION : Manufacturer:	OEM Manual	MCKISSICK
	Model:	OEM Manual	MB 07T200E
	Serial Number:	OEM Manual	9813198
	Record Auxiliary Ball measurements and details for future comparison with historical data: For Model MB07T200E ONLY	Industry Standard	
	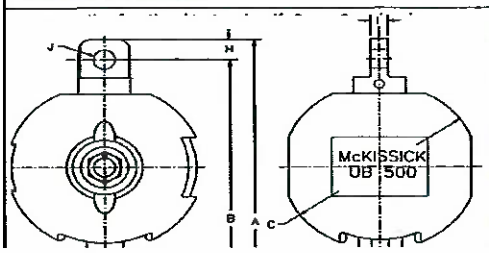 AA Dimensions 3.0 Inch	Industry Standard	3.0 mm/ inch
	A Dimensions 24.89 Inch	Industry Standard	24.89 mm/ inch
	B Dimensions 21.71 Inch	Industry Standard	21.71 mm/ inch
	C Dimensions 12.50 Inch	Industry Standard	12.50 mm/ inch
	D Dimensions 1.61 Inch	Industry Standard	1.61 mm/ inch

[redacted] / 7 Nov 2025

SYSTEM	TASK		Specification	Record/Reading
	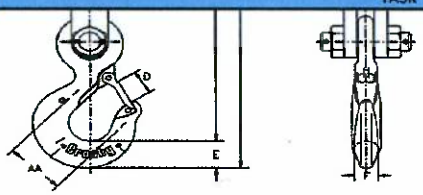	E Dimensions 1.81 Inch	Industry Standard	1.81 mm/ inch
		F Dimensions 1.38 Inch	Industry Standard	1.38 mm/ inch
		H Dimensions 1.38 Inch	Industry Standard	1.38 mm/ inch
		I Dimensions 0.88 Inch	Industry Standard	0.88 mm/ inch
		J Dimensions 1.31 Inch	Industry Standard	1.31 mm/ inch
Safety system	Check Condition anti - two block , hanging chain ,eye bolts , fix bolts , shackle for missing , corrosion , erosion , deformation		API RP 2D	(✓) YES ( ) NO
	Check anti - two block kick out plate for freely movement		Company Spec/Standard	(✓) YES ( ) NO
	Check anti-2-block device proper function of Main winch			(✓) Function ( ) False
	Check anti-2-block device proper function of Aux. winch			(✓) Function ( ) False
	Visually check emergency load lowering kit. Ensure EMERGENCY LOWERING PROCEDURE and MATERIAL LIST are in the box. - Ensure ALL items shown on the list are in the box and in good condition - **SECURE THE BOX WITH A TIE WRAP.**		Company Spec/Standard	(✓) YES ( ) NO
Slew Mechanism	Visually check for damage and excessive wear on gear teeth		OEM Manual	(✓) YES ( ) NO
	Visually check slew gear box in the area of oil seal for any leaks		API RP 2D	(✓) YES ( ) NO
	CHECK and RE-TORQUE swing drive gearbox mounting bolts at following brands: - ESKRIDGE, Model: 250 = 150 FT-LBS		API RP 2D	150 FT-LBS
	RECORD SLEW GEAR BOX INFORMATION :	Manufacturer:	OEM Manual	ESK
		Model:	OEM Manual	250 A
		Serial Number:	OEM Manual	-
	Check swing gearbox oil level/condition, top up if required	Meropa 220	OEM Manual	(✓) YES ( ) NO
	Monitor slew gearbox oil condition by visually examine for burnt smell, metal particles, and/or other contaminants, record and change if found.		OEM Manual	( ) CHANGE OIL (✓) NOT CHANGE OIL
	Grease all pivot points of slew ring (bearing)		OEM Manual	(✓) YES ( ) NO
	Grease open gears (pinion)		OEM Manual	(✓) YES ( ) NO
	Check condition of slew ring bolts e.g. Bolt grade and washers. **Caution:** Use only hardened flat washers under head of bolt. Do not use lock washers, or regular flat washers.		Industry Standard	(✓) YES ( ) NO
	Monitor ball-ring grease sample. If found wear and tear particles, take sample and send to lab. **Wear assessment by grease sample analysis—wear may be monitored by periodic grease sample analysis as describe in this section. Grease samples should be collected every twelve months as a minimum and the results of the analysis recorded; this period should be shortened if obvious metal or contaminants are present.		API PR 2D	( ) SEND TO LAB (✓) NOT SEND TO LAB
	Check ball ring bolts torque (For American Aero ONLY) : After 3-4 hours, or initial "Run-in", and after every 500 operating hours, re-torque all of the bolts. Annually, or AFTER 2,000 Hours of Operation, re-torque the bolts. **Criteria:** If one or more bolts are found to be tightened to less than 80% of the prescribed pre-stress, that loosen bolt (s) should be replaced, in addition to the two adjacent bolts. If 20% of the total number of bolts are found to tightened to less than 80% of the prescribed pre-stress, replace all bolts.(Pre - Load)		Company Spec/Standard	(✓) YES ( ) NO
	PARAMETER	1236 ft-lbs	OEM Manual	(✓) YES ( ) NO
	PARAMETER	1236 ft-lbs	OEM Manual	(✓) YES ( ) NO
	Check slew pinion back lash clearance, and record:		OEM Manual	
	RECORD MEASSUREMENTS:	0.019" Min/ 0.030" Max 0-North	OEM Manual	0.022 inch
		45-Northeast	OEM Manual	0.019 inch
		90-East	OEM Manual	0.020 inch
		135-Southeast	OEM Manual	0.021 inch
		180-South	OEM Manual	0.024 inch
		225-Southwest	OEM Manual	0.022 inch
		270-West	OEM Manual	0.024 inch
		315-Northwest	OEM Manual	0.024 inch
	RECORD SLEW RING INFORMATION :	**Manufacturer:**	OEM Manual	Rotex
		Model:	OEM Manual	-
		Serial Number:	OEM Manual	44560 A1
	TORQUE WRENCH RECORD:	**Torque Wrench S/N:**	Industry Standard	-
		Calibration Date:	Industry Standard	20178/06/11
	Perform ball ring deflection readings to check for bearing wear and record reading in below chart:		API RP 2D	(✓) YES ( ) NO

Explain reason for No Bearing Deflection Reading: (IF N/A)

Applicable for Nautilus ONLY

Boom Position	Boom Rest	Water Side	180 Degrees From	180 Degrees from	Grease Samples Positions	
0-North	0	0	0	0	0	
45-Northeast	0.005	0.018	0.005	0.007	45	
90-East	0.015	0.022	0.026	0.022	90	
135-Southeast	0.022	0.036	0.034	0.036	135	
180-South	0.032	0.022	0.032	0.032	180	
225-	0.010	0.003	0.010	0.003	225	
270-West	0	0	0	0	270	

[redacted] / 7 Nov 20.

SYSTEM	TASK				Specification		Record/Reading
	315-	0	0	0	0	315	
	360-North	0	0	0	0	360	

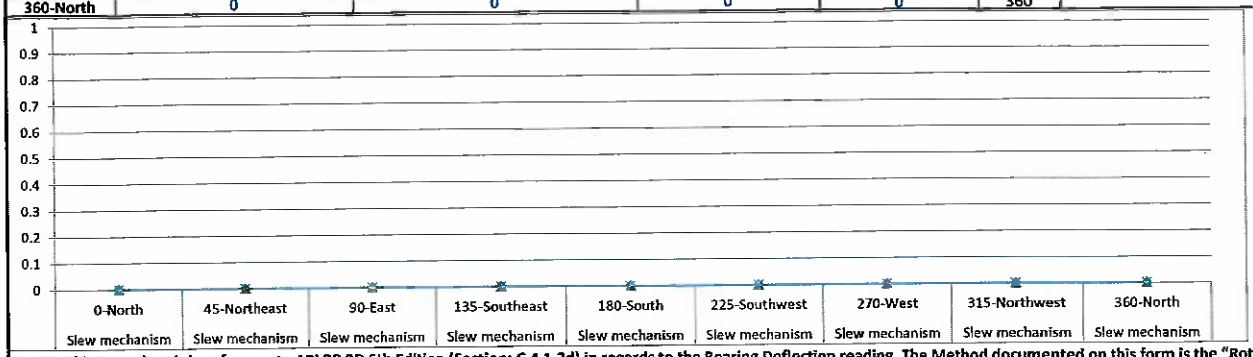

NOTE: This Procedure is in reference to API RP 2D 6th Edition (Section: C.4.1.2d) in regards to the Bearing Deflection reading, The Method documented on this form is the "Rotation Method" as described in detail in the API RP 2D

Review with previous PM inspection report for signs of irregularities or increased wear.		API RP 2D	(✓) YES ( ) NO
The permissible bearing wear for the swing bearing to be used as a guideline ** Note ; If the initial bearing clearance (bearing defection) is not know the absolute maximum permissible clearance(or wear) for the bearing is: 0.120 inch (3.05 mm)	< 0.134 inch	OEM Manual	0.036 inch
Rotate crane 360 degree and check smoothness of operation		OEM Manual	(✓) YES ( ) NO
Check swing drive static parking brake for proper operation Caution: **DO NOT stop the swing of the crane with this static brake (parking brake)**		OEM Manual	(✓) YES ( ) NO
Check swing lock mechanism condition, corrosion ,dent , loos all part,worn and wear		OEM Manual	(✓) YES ( ) NO
Check swing lock mechanism freely lock and unlock for function		OEM Manual	(✓) YES ( ) NO
Verify crane condition and load test as separate procedure.		API 2C	( ) YES ( ) NO
Verify crane condition and load test as separate procedure.		บัจ.1	(✓) YES ( ) NO

Table 1—Static/Onboard Test Load and Radius

Static/Onboard Rated Load at a Specific Radius lb (kg)	Test Loads in Excess of Static/Onboard Rated Load at a Specific Radius
≤ 40,000 (18,144)	25 %
> 40,000 ≤ 100,000 (>18,144 ≤ 45,356)	10,000 lb (4536 kg)
> 100,000 (45,356)	10 %

Risk Level Definitions: The following 3 levels indicate the impact the noted deficiency poses to the operation or structural integrity of the equipment:

Level 1 = Incidental	Level #2 = Restricted Operation	Level #3 =Out of Service
Minor deficiency that is recommended to be promptly addressed, but poses no safety and/or environmental risk. The crane can still be operated at full duty.	Deficiency identified that has the potential to limit, de-rate or damage the crane, its surroundings and/or the environment. The duty and locked/ tagged out until the crane's duty and operation should be de-rated or service restricted.	The crane should be removed from duty and locked/ tagged out until the deficiency is rectified.

System:	Risk Level:	Component: Location:		In Accordance with: Date Originated:	
Description:	Aux load Cell Valus is Incorrect.				
Recommended	WO: 1268193.				
Recommended urgency timeframe for corrective action:	Next Plan.		Completed Date:	Completed By:	

System:	Risk Level:	Component: Location:		In Accordance with: Date Originated:	
Description:					
Recommended					
Recommended urgency timeframe for corrective action:			Completed Date:	Completed By:	

System:	Risk Level:	Component: Location:		In Accordance with: Date Originated:	
Description:					
Recommended					

[redacted] / 7 Nov 25.

SYSTEM	TASK			Specification		Record/Reading
Recommended urgency timeframe for corrective action:			Completed Date:		Completed By:	

System:	Risk Level:	Component:		In Accordance with:	
		Location:		Date Originated:	
Description:					
Recommended					

Recommended urgency timeframe for corrective action:		Completed Date:		Completed By:	

System:	Risk Level:	Component:		In Accordance with:	
		Location:		Date Originated:	
Description:					
Recommended					

Recommended urgency timeframe for corrective action:		Completed Date:		Completed By:	

System:	Risk Level:	Component:		In Accordance with:	
		Location:		Date Originated:	
Description:					
Recommended					

Recommended urgency timeframe for corrective action:		Completed Date:		Completed By:	

System:	Risk Level:	Component:		In Accordance with:	
		Location:		Date Originated:	
Description:					
Recommended					

Recommended urgency timeframe for corrective action:		Completed Date:		Completed By:	

Completed By

[redacted]

7 Nov 25

THE PEDESTAL CRANE CONDITION VERIFICATION

Date : 6 Nov 25			
Crane Owner : CTEP/ COTL Field: Benchamas Platform/ Vessel: BFWB			
Crane Owner 's representative : (Mech Supv./ M'Dent) [redacted]			
Qualified inspector : (Qualified Crane Mechanic) [redacted]			
Inspector 's company / agency : (Third Party or Outsource to witness if applicable)			
Manufacture Nautilus Fabrication by Oil State Year of Fabrication 1998 Country USA Model / Serial 190B1-30/109709 C Standard API Edition Fifth			Remark
Safe Working Load (SWL) —> OEM	18.46 Metric Tonnes		
Safe Working Load (SWL) —> Existing via MOC, if applicable	— Metric Tonnes		
Boom length, Main	80 Ft		
Boom length, Auxiliary if applicable	— Ft		
Part of line main hoist	4 Part line		
Part of line auxiliary hoist	1 Part line		
Safe Working Load at longest boom radius	80 ft	7666 ~~Metric Tonnes~~/ Lbs	
Safe Working Load at shortest boom radius	13 ft	40703 ~~Metric Tonnes~~/ Lbs	
The document of crane specification for Testing , Maintenance and Inspection are provided by:	OEM	MOC / Crane Engineer	
Has the crane ever been modified by MOC ? (To verify if this crane is modified with MOC —> Allow to test the crane. If this crane is modifed without MOC --> Not allow to test the crane)	YES	NO	(Employers are not allowed to modify or adjust any part of cranes or dericks or consent to other persons to do these things, that might reduce the safety of the employees who work with the cranes or derricks).
Does the rotating part have proper guard in place?	YES	NO	(Need mitigation plan)
Is the ladder and hand rail in place?	YES	NO	(Need mitigation plan)
Is the maintenance platform in place?	YES	NO	(Need mitigation plan)
Is the SWL tag labelled on crane pedestal, main block or aux ball?	YES	NO	(Need mitigation plan)
Verify if the crane major component damaged or not	YES (Need to repair or mitigate unsafe condition with MOC before testing)	NO	(Employers shall not allow employees work with damaged/ unsafe cranes or derricks)
Inspect boom end connections, for bends, dents, corroded areas, cracked welds, and signs of mechanical damage, wear, etc. **any deviation should be reported** Level 1 = Incidental : Minor deficiency that is recommended to be promptly addressed, but poses no safety and/or environmental risk. The crane can still be operated at full duty. --> Allow to test Level #2 = Restricted Operation: Deficiency identified that has the potential to limit, de-rate or damage the crane, its surroundings and/or the environment. The duty and locked/ tagged out until the crane's duty and operation should be de-rated or service restricted. --> **To be derated** Level #3 = Out of Service;The crane should be removed from duty and locked/ tagged out until the deficiency is rectified. --> Not Use	YES (To be verified)	NO	
Function Load Testing			
1. Verify Crane SWL (Existing)	3.0 Metric Tonnes		
2. Verify routine maximum actual load.	2.4 Metric Tonnes		
3. Select the specimen load to be more than actual routine load 1.25 times but not more than SWL. Example # 1 : Crane 's SWL is 18 Metric Tonnes. The routine maximum actual load is 2.4 Metric Tonnes. Therefore, the load testing shall be 2.4 x 1.25 = 3 Metric Tonnes. Example # 2 : Crane 's SWL is 18 Metric Tonnes. The routine maximum actual load is 16 Metric Tonnes. By calculation, the load testing is 16 x 1.25 = 20 Metric Tonnes more than SWL (18 MTon). **Therefore, the load testing shall be 18 Metric Tonnes equal to SWL.**	3.0 Metric Tonnes		
4. Use Auxiliary Winch if specimen load less than or equal 3 Metric Tonne	YES	NO	
5.Use Main Winch if specimen load more than 3 Metric Tonne	YES	NO	
6. The record of load testing : Fill in "Function Test Record" sheet attached.			

RECORDED FUNCTION TEST PROCEDURE

1. CHECK AND RECORD READING RADIUS AND BOOM INDICATIOR AT FOUR (4) VALUES INCLUDING MAXIMUM AND MINIMUM.

(ALL REDIUS MEASUREMENT ARE TO BE TEKEN FROM THE CENTERLINE OF CRANE ROTATION)

ACTUAL	INDICATED RADIUS (FT)
A) 15' (MINIMUM)	15
B) 20'	20
C) 25'	25
D) 30' (INTERMIDIATE)	30
E) 40'	40
F) 50' (INTERMIDIATE)	50
G) 60'	60
H) 75' (MAXIMUM)	75

2. CHECK AND RECORD READING ON BOOM ANGLE / DEGREES.

SPECIFICATION	INDICATED BOOM ANGLE (DEGREES)
1). MAXIMUM. ....21..... DEGREES	21
2). INTERMEDIATE. ....60..... DEGREES	60
3). INTERMEDIATE. ..... 40..... DEGREES	40
4). MINIMUM. .....0..... DEGREES	0

3. READING ON LOAD INDICATOR WITHOUT SLINGS OR LOAD / LBS. (LOAD BLOCK + WIRE ROPE)

ACTUAL	INDICATOR READ FREE LOAD, (LBS)
1). MAXIMUM RADIUS 740 LBS.	740
2). MINIMUM RADIUS 950 LBS,	950

4. CHECK AND RECORD ENGINE HIGH IDLE SPEED / RPM.

SPECIFICATION	INDICATED OF FUNCTIONAL (RPM)
1). IDLE SPEED 850 RPM	850
2). LOW SPEED – RPM	–
3). HIGH SPEED 2200 RPM	2200

5. FUNTIONALLY TEST THE FOLLOWING.

ACTUAL	INDICATED OF FUNCTIONAL (TESTED)
A) MAIN HOIST ANTI -TWO BLOCK.	function
B) AUXILIALY HOIST ANTI -TWO BLOCK.	function
C) HIGH BOOM ANGLE KICK OUT.	N/A
D) LOW BOOM ANGLE KICK OUT.	N/A
E) PRIME MOVER SHUTDOWN.	function
F) EMERGENCY SHUTDOWN.	function
G) ROTATE CRANE 360 LEFT.	Smoot
H) ROTATE CRANE 360 RIGHT.	Smoot

6. RECORD HYDRAULIC RELIEF VALVE PRESSURE SETTING ON FOLLOWING HYDRAULIC FUNCTION:

SPECIFICATION	INDICATED PRESSURE (PSI)
A) MAIN HOIST ....2500... PSI.	2500
B) AUXILIALY HOIST ..2500..... PSI.	2500
C) BOOM HOIST 2700..... PSI.	2700

TEST CONDUCTED BY: [redacted] POSITION : CR-Mech

CRANE OPERATOR : POSITION :

COMMENTS : DATE : 6 Nov 25

.....

.....

.....

.....

CRANE MAKE : Nautilus
MODEL: 180B1-80
SERIAL NUMBER :

LOCATION
BEWC

DATA BASE - PM JOB TASK CARD 3M
WO: 1264682

Crew Size:
Estimated Hours:

SYSTEM	TASK		Specification	Record/Reading
	JOB PREPARATION			
Safety	Perform Job Safety Analysis (JSA)		Company Spec/Standard	(✓) YES ( ) NO
	Obtain "COMPANY" PERMIT TO WORK		Company Spec/Standard	(✓) YES ( ) NO
	Perform Tool Box Talk		Company Spec/Standard	(✓) YES ( ) NO
	BEFORE/AFTER JOB EXECUTION: Ensure to comply with isolation procedure (LOCK OUT/TAG OUT, WARNING SIGNS and BARRIERS).		Company Spec/Standard	(✓) YES ( ) NO
Required Tools	Insure proper tools are available at the job site		Company Spec/Standard	(✓) YES ( ) NO
	Tool bag		Company Spec/Standard	(✓) YES ( ) NO
	Tool box		Company Spec/Standard	(✓) YES ( ) NO
Lubricants	Insure proper lubricants and consumables are available at the job site.		Company Spec/Standard	(✓) YES ( ) NO
	Hydraulic System - Hydraulic Oil	Rando HD-68	OEM Manual	(✓) YES ( ) NO
	Slew Gearbox - Gear Oil	Omala 220	OEM Manual	(✓) YES ( ) NO
	Auxiliary Hoist - Gear Oil	Omala 220	OEM Manual	(✓) YES ( ) NO
	Main Hoist - Gear Oil	Omala 220	OEM Manual	(✓) YES ( ) NO
	Grease Points - Lithium Based **IT MUST NOT INCLUDE MOLYBDENUM	MULTIFAX EP#2	OEM Manual	(✓) YES ( ) NO
	Open Gear Teeth - Open Gear Lube highly water resistant and of an adhesive nature.	Open Gear Lube	OEM Manual	(✓) YES ( ) NO
	Wire rope Lubricant Company preferred grade	Brilube 70	OEM Manual	(✓) YES ( ) NO
	Engine Oil - SAE Grade 15W-40 (Delo Gold)	15W-40	OEM Manual	(✓) YES ( ) NO
	Safe Load Indicator fluid	W-15	OEM Manual	(✓) YES ( ) NO
	Engine Radiator - Should have radiator preservatives additives	Delo Extended Life	OEM Manual	(✓) YES ( ) NO
Consumables	Spray Cold Galvanize		Company Spec/Standard	(✓) YES ( ) NO
	WD-40		Company Spec/Standard	(✓) YES ( ) NO
History Review	Before starting work, tasks preparation at least 1 day prior to starting work: 1. Review history PM/ CM from Roving Team, 2. Review last PM/ CM/ PMI from Crane Mech, 3. List out all punch list and prepare parts. 4. Review last Certificate task performed		API RP 2D	(✓) YES ( ) NO
	Require to update part history from Roving Team and Crane Mech on following main compenents to ensure the right parts are prepared: - Aux/ Main/ Boom Cylinder, Engine, Swing Gearbox, etc. **Reference:** Crane OEM information of each part need to be recorded - Manufacturer & Contact info - Model & serial number - Installation date		Company Spec/Standard	(✓) YES ( ) NO
	Review history data from Certificates and incorporate into current PM: - Pull Test Certificates (ongoing update, 4 yr. history). - Load Test Certificates (ongoing update, 4 yr. history). - Wire Rope Certifications (running rope and standing rope) (life of rope). - Hoist Certifications for hoist classified as "personnel handling" hoist.		API RP 2D	(✓) YES ( ) NO
	Review Last Preventative Maintenance Records (Inspection Reports) - Pre-use (Pre-Post Inspection) - 1 Monthly - 3 Monthly (API RP 2D Defined Quarterly Inspection) - 6 Monthly (API RP 2D Not Defined, Company Standard) - 1 Yearly (API RP 2D Defined Annual Inspection)		API RP 2D	(✓) YES ( ) NO
Lifting Gear Preparation	Visually Inspect (Sling, sling hooks and shackles) include Websling / Chain		Company Spec/Standard	(✓) YES ( ) NO
	Check color code / Tag & date inspection		Company Spec/Standard	(✓) YES ( ) NO
	PM JOB STARTING			
General	Determine if access route to-from crane is clean, safe, unobstructed and adequately protected against falls, tripping and slipping		Company Spec/Standard	(✓) YES ( ) NO
General	Inspect drain lines and drip pans for deterioration		API RP 2D	(✓) YES ( ) NO
	Remove any sediment collected in the bottom of drip pans		Industry Standard	(✓) YES ( ) NO
	Inspect for general crane and components for loss of protective coating and corrosion		Industry Standard	(✓) YES ( ) NO
	Visually inspect for missing or loose pins, pin keepers, bolts, nuts, fasteners		API RP 2D	(✓) YES ( ) NO
	Apply grease to exposed grease parts (control valve spools, ball-ring gear, parking brake valve, etc.)		OEM Manual	(✓) YES ( ) NO
	Grease all grease fittings e.g. boom foot pin, lower/ upper tank of boom cylinder		OEM Manual	(✓) YES ( ) NO
Prime Mover	Engine CATERPILLAR 3304DI		OEM Manual	
	Check lube oil level and condition, top up / replace if required		OEM Manual	(✓) YES ( ) NO
	Check diesel tank level, top up if required **Full Tanks gather less Condensation**		OEM Manual	(✓) YES ( ) NO
	Check/Clean crankcase breather		OEM Manual	(✓) YES ( ) NO
	Check/Clean air cleaner		OEM Manual	(✓) YES ( ) NO
	Check radiator & Cap and record condition		OEM Manual	(✓) YES ( ) NO
	Check for any signs of leaks on or around the engine ie; Crankshaft seal (front /rear)		OEM Manual	(✓) YES ( ) NO
	Inspect for engine exhaust system for leaks, corrosion, insulation and general condition		OEM Manual	(✓) YES ( ) NO
	Inspect all engine hoses for wear and deterioration		OEM Manual	(✓) YES ( ) NO
	Drain water and sediment for diesel tank		OEM Manual	(✓) YES ( ) NO
	Clean Diesel tank level sightglass		OEM Manual	(✓) YES ( ) NO
	Lubricate fan bearing/shaft		OEM Manual	(✓) YES ( ) NO
	Change radiator Coolant		OEM Manual	(✓) YES ( ) NO
	Test radiator Coolant PH, Top up if required and Record Value		OEM Manual	(✓) YES ( ) NO
	Determine if engine hour meter is working and giving accurate measurements and record:		OEM Manual	
	HOUR METER PARAMETERS:	LAST READING xxxx HRS	OEM Manual	2402 HRS
	Check condition of engine hold down bolts		OEM Manual	(✓) YES ( ) NO
	Inspect belts for wear and looseness. If necessary, replace or adjust. To check belt Tension, apply 110 N (25 lbs) of force midway between the pulleys. Correctly adjusted belts with deflect 13 to 19 mm (1/2 to 3/4 inch).		OEM Manual	(✓) YES ( ) NO

[redacted] / 4 Nov 25

SYSTEM	TASK			Specification	Record/Reading
	Check engine starter drive gear bendix and fly wheel gear teeth condition and record. **Replace if required"			OEM Manual	(✓) YES ( ) NO
	Lubricate engine throttle linkage, if applicable			OEM Manual	(✓) YES ( ) NO
	Determine if the tachometer operates properly: Record Value of Idle & Max Speed (RPMs) Note: Too low Idle (RPMS) will cause excessive worn at winch break			OEM Manual	
	ENGINE RPM SPECIFIC**	IDLE SPEED	850 RPM	OEM Manual	850 RPM
		MAX SPEED	2200 RPM	OEM Manual	2200 RPM
	Confirm engine oil pressure as per Parameters below and Record Value:			OEM Manual	
	ENGINE OIL PRESSURE SPECIFIC**	Minimum	30 PSI	OEM Manual	30 PSI
		Maximum	70 PSI	OEM Manual	70 PSI
	Confirm engine fuel pressure Parameters are correct and Record Value:			OEM Manual	
	ENGINE FUEL PRESSURE SPECIFIC**	Minimum	25 PSI	OEM Manual	30 PSI
		Maximum	42 PSI	OEM Manual	40 PSI
	Confirm engine temperature Parameters and Record Value:			OEM Manual	
	ENGINE WATER TEMP PARAMETERS	NORMAL	120 - 180 degrees F	OEM Manual	165 F
	Test engine SAFETY DEVICE- ensure engine kill cable shuts off FUEL supply			API RP 2D	(✓) Function ( ) False
	Evaluate engine performance, tune up if required			Company Spec/Standard	(✓) YES ( ) NO
	Check / Clean primary fuel/water separator *Replace if required*			OEM Manual	(✓) YES ( ) NO
	Check condition of turbocharger, and for any oil or hot air leaks			OEM Manual	( ) Leak (✓) Not Leak
Hydraulic Start System (Apply for C2-Remote P/F Only)	**Check pressure system** at the pressure gauge which should reach 3,000 PSI as standard when the system is FULLY charged. Record Value. (As the system cools down, the pressure should drop slightly and finally stabilised.)			OEM Manual	(✓) YES ( ) NO
	Visually inspect all hydraulic connections and hoses for leaks and retighten if necessary. (Caution: This should NOT be done if the system is under pressure.) 1. Slowly release system pressure by loosening the bleed screw on top of the hand pump. 2. Ensure no pressure remains, retighten the suspected leak fitting or replace the damaged hose or component. 3. Retighten the bleed screw on the hand pump. 4. Pump the system up to 2200 - 2600 PSI 5. Inspect that the leak was eliminated.			OEM Manual	As Found Good As Left Good
	Function check Accumulator Pre-charge. (Caution: This should NOT be done if the system is under pressure.) 1. Shut the engine off, release system pressure via the bleed screw on top of the hand pump 2. Retighten bleed screw and actuate the hand pump. The pressure will rapidly increase and then stabilised. This pressure is related to accumulator gas pre-charge pressure. 4. If the pressure rapidly increase to 3000 PSI, it indicates that the accumulator has lost its gas charge. 5. Troubleshoot as necessary			OEM Manual	As Found Good As Left Good
	Check the unloading valve integrity with the engine running. 1. Slowly release system pressure by loosening the bleed screw on top of the hand pump. 2. Tighten bleed screw on top of hand pump and notice pressure in system will increase. 3. This pressure should read between 2200 - 2600 PSI depending on the recharge ratio 80% std. (90% optional). Record Pressure Value.			OEM Manual	2500 PSI
	Check Nitrogen pressure in Accumulator (spec @ 1,500 psi)			OEM Manual	(✓) YES ( ) NO
Hoist / Brakes	Any time a hoist exhibits erratic operation and/or unusual noise, the hoist must be taken out of service until it is inspected and serviced by a qualified technician. Continued operation of a hoist with a defect in a critical component may lead to loss of load control, property damage, serious injury or death.			OEM Manual	(✓) YES ( ) NO
	Inspect exteriors of hoist, frames, drums and flanges for damage, leaks, cracks and wear and repair/replace as required to maintain the structural integrity of the hoist.			OEM Manual	(✓) YES ( ) NO
	Check for external oil leaks and repair as necessary. This is extremely important due to the accelerated wear that will result from insufficient lubricating oil in the hoist.			OEM Manual	(✓) YES ( ) NO
	Brake test & record pressure of MAIN HOIST			OEM Manual	(✓) YES ( ) NO
	Brake test & record pressure of AUXILIARY HOIST			API RP 2D	(✓) YES ( ) NO
	Check Relief Valve: Determine hoistes' relief valve pressure gauge is working and giving accurate measurement by notice whether pressure gauge is vibrating or not. If not, set relief valve pressure in accordance with the schematic and parameters below. Record all readings.			OEM Manual	(✓) YES ( ) NO
	BOOM RELIEF VALVE TEST	Relief Specific:	2700 PSI	OEM Manual	2700 PSI
	MAIN HOIST RELIEF VALVE TEST	Relief Specific:	2500 PSI	OEM Manual	2500 PSI
	AUX HOIST RELIEF VALVE TEST	Relief Specific:	2500 PSI	OEM Manual	2500 PSI
	~~SWING RELIEF VALVE TEST~~	~~Relief Specific:~~	~~1200 PSI~~	OEM Manual	~~1200~~ PSI
Hydraulic System	Drain off 1 liter of oil to remove condensed water. If water is present, drain until water is removed and top up with clean oil PARAMETERS			Industry Standard	(✓) YES ( ) NO
	Check the filter bypass indicator, while engine is running			OEM Manual	(✓) YES ( ) NO
	Record hydraulic oil operating temperture. Note: Hydraulic fluid overheating temperature is over 180 F degrees or 82 C, degrees (reservoir temperature)			Industry Standard	130 Degree F
	RECORD HYDRAULIC RETURN PRESSURE:		75 psi "maximum"	OEM Manual	PSI
Electrical system	Check the electrical junction boxes, wires and connections for deterioration			Industry Standard	(✓) YES ( ) NO

[redacted] / 4 Nov 28

SYSTEM	TASK	Specification	Record/Reading
	Check the condition of the Slip ring	Industry Standard	✓) YES ( ) NO
	Check the condition of the grounding and lighting protection system.	Company Spec/Standard	✓) YES ( ) NO
	Visually inspect boom lights and light guards for loose, missing, corroded	Company Spec/Standard	✓) YES ( ) NO
	Check the electrical junction boxes, wires and connections for desiccant bags, (replace as required)	Company Spec/Standard	✓) YES ( ) NO
Operator Control Station	Check general condition of control panel, bolts, paint security, etc.	API RP 2D	✓) YES ( ) NO
Operator Control Station	Determine if there is a serviceable fire extinguisher in the vicinity of the crane	Company Spec/Standard	✓) YES ( ) NO
	Determine if correct load chart is in use and easily visible for operator	API RP 2D	✓) YES ( ) NO
	Determine if charts, indicators and hand signal chart are in the cabling and firmly attached	API RP 2D	✓) YES ( ) NO
	Determine if angle/radius indicator plate is easily visible to operator and is moving freely.	API RP 2D	✓) YES ( ) NO
	Check condition of pressure gauges.	API RP 2D	✓) YES ( ) NO
	Check controls for freedom-of-movement	API RP 2D	
Load Indicator System	Visual check on fittings and connections for leaks. Fix leak if any.	OEM Manual	✓) YES ( ) NO
	Should any leaks exist, stop leak and recharge system, refer to maintenance manual	OEM Manual	✓) YES ( ) NO
	Check general condition of tubbing, hoses, pins bolts, paint, etc.	Industry Standard	✓) YES ( ) NO
	Check load cell gap 5/8 inch or +/- 1/8 inch (Dalphragm Load Cell Type)	OEM Manual	✓) YES ( ) NO
	Insure load cell is free of obstructions	OEM Manual	✓) YES ( ) NO
	Check condition of gauge(s) face and clean glass as required.	OEM Manual	✓) YES ( ) NO
	Check weight indicator function (Main)	Company Spec/Standard	✓) YES ( ) NO
	Check weight indicator function (Aux)	Company Spec/Standard	✓) YES ( ) NO
	Check weight indicator fluid, top up if required	Industry Standard	✓) YES ( ) NO
	Check load cell gap 5/8 inch or +/- 1/8 inch (Dalphragm Load Cell Type)	OEM Manual	✓) YES ( ) NO
	Check weight indicator accuracy "maximum variance +/- 10%"	Industry Standard	✓) YES ( ) NO
Boom & Boom Cylinders	Lubricate boom foot pins and bushings	OEM Manual	✓) YES ( ) NO
	Lubricate boom cylinder pins, bearings and bushings	OEM Manual	✓) YES ( ) NO
	Inspect boom rest and wooden support to ensure it's in good condition	API RP 2D	✓) YES ( ) NO
	Inspect connecting pins and pin holes for excessive clearance	OEM Manual	
	Check BOOM CYLINDERS for proper operation and good condition	API RP 2D	✓) YES ( ) NO
Crane Boom Lighting & Safety Net	Check condition of crane boom lighting and safety net is secured with strong point. * **Safety net should be replace 24 months after installation (2 year)*** — Last installation date _____	Company Spec/Standard	✓) YES ( ) NO
	Check function of crane boom lighting	Company Spec/Standard	✓) YES ( ) NO
Wire Rope	Inspect wire rope for, kinking, crushing, broken wires, necking down of rope diameter, worn outside wires, corroded or broken wires at end connection, cutting or unstringing. **Running Ropes of rotation-resistant construction used in the main or auxiliary Hoist:** - Four (4) Randomly distributed broken wires with in one (1) lay length - Two (2) broken wires in one strand within one (1) lay length	API RP 2D	✓) YES ( ) NO
Safety system	Check function of boom high angle limit stop to ensure the boom stops at the proper angle and record value:	API RP 2D	81 Degree
	Check function of boom low angle limit stop to ensure the boom stops at the proper angle and record value:	API RP 2D	0 Degree
Slew mechanism	Check swing drive static parking brake for proper operation Caution: **DO NOT stop the swing of the crane with this static brake (parking brake)**	OEM Manual	✓) YES ( ) NO
	Function test Dynamic brake while slewing the crane	OEM Manual	✓) YES ( ) NO

Risk Level Definitions: The following 3 levels indicate the impact the noted deficiency poses to the operation or structural integrity of the equipment:

Level 1 = Incidental	Level #2 = Restricted Operation	Level #3 =Out of Service
Minor deficiency that is recommended to be promptly addressed, but poses no safety and/or environmental risk. The crane can still be operated at full duty.	Deficiency identified that has the potential to limit, de-rate or damage the crane, its surroundings and/or the environment. The duty and locked/ tagged out until the crane's duty and operation should be de-rated or service restricted.	The crane should be removed from duty and locked/ tagged out until the deficiency is rectified.

System:	Risk Level:	Component:		In Accordance with:	
		Location:		Date Originated:	3 Nov 25
Description:	- Main load cell seep leak.				
Recommended					
Recommended urgency timeframe for corrective action:	Next Plan.	Completed Date:		Completed By:	

System:	Risk Level:	Component:		In Accordance with:	
		Location:		Date Originated:	
Description:					
Recommended					

[redacted] / 4 Nov 25

SYSTEM	TASK		Specification		Record/Reading
Recommended urgency timeframe for corrective action:		Completed Date:		Completed By:	

System:	Risk Level:	Component:		In Accordance with:	
		Location:		Date Originated:	
Description:					
Recommended					
Recommended urgency timeframe for corrective action:			Completed Date:		Completed By:

System:	Risk Level:	Component:		In Accordance with:	
		Location:		Date Originated:	
Description:					
Recommended					
Recommended urgency timeframe for corrective action:			Completed Date:		Completed By:

System:	Risk Level:	Component:		In Accordance with:	
		Location:		Date Originated:	
Description:					
Recommended					
Recommended urgency timeframe for corrective action:			Completed Date:		Completed By:

Completed By

[redacted]

3 Nov 25

CRANE Mfg. : Nautilus
MODEL: 180B1-80 (MS)
SERIAL NUMBER :

LOCATION: BEWX

DATA BASE - PM JOB TASK CARD 1Y PM
WO: 1265338

Crew Size:
Estimated Hours:

SYSTEM	TASK		Specification	Record/Reading
Safety	Perform Job Safety Analysis (JSA)		Company Spec/Standard	(✓) YES ( ) NO
	Obtain "COMPANY' PERMIT TO WORK		Company Spec/Standard	(✓) YES ( ) NO
	Perform Tool Box Talk		Company Spec/Standard	(✓) YES ( ) NO
	BEFORE/AFTER JOB EXECUTION: Ensure to comply with isolation procedure (LOCK OUT/TAG OUT, WARNING SIGNS and BARRIERS).		Company Spec/Standard	(✓) YES ( ) NO
Required Tools	Insure proper tools are available at the job site		Company Spec/Standard	(✓) YES ( ) NO
	Tool bag		Company Spec/Standard	(✓) YES ( ) NO
	Tool box		Company Spec/Standard	(✓) YES ( ) NO
	Tool Container		Company Spec/Standard	(✓) YES ( ) NO
	MPI equipment and operator		Company Spec/Standard	(✓) YES ( ) NO
	Check safety harness Software and Hardware should be good condition before use		Company Spec/Standard	(✓) YES ( ) NO
	Check Rescue Equipment ready to use onsite		Company Spec/Standard	(✓) YES ( ) NO
	Portable Scaffolding and Crew if require		Company Spec/Standard	(✓) YES ( ) NO
Lubricants	Insure proper lubricants and consumables are available at the job site.		Company Spec/Standard	(✓) YES ( ) NO
	Hydraulic System - Hydraulic Oil	Rando HD-68	OEM Manual	(✓) YES ( ) NO
	Slew Gearbox - Gear Oil	Meropa 220	OEM Manual	(✓) YES ( ) NO
	Auxiliary Hoist - Gear Oil	Meropa 220	OEM Manual	(✓) YES ( ) NO
	Main Hoist - Gear Oil	Meropa 220	OEM Manual	(✓) YES ( ) NO
	Grease Points - Lithium Based **IT MUST NOT INCLUDE MOLYBDENUM DISULPHIDE**	MULTIFAK EP#2	OEM Manual	(✓) YES ( ) NO
	Open Gear Teeth - Open Gear Lube highly water resistant and of an adhesive nature.	OMEGA 73	OEM Manual	(✓) YES ( ) NO
	Pneumatic Lubricator	SAE Grade 10	OEM Manual	(✓) YES ( ) NO
	Wire rope Lubricant Company preferred grade	Biriube 70	OEM Manual	(✓) YES ( ) NO
	Engine Oil - SAE Grade 15W-40 (Delo Gold)	15W-40	OEM Manual	(✓) YES ( ) NO
	Safe Load Indicator fluid	W-15	OEM Manual	(✓) YES ( ) NO
	Engine Radiator - Should have radiator preservatives additives	Cat® SCA	OEM Manual	(✓) YES ( ) NO
Consumables	Spray Cold Galvanize		Company Spec/Standard	(✓) YES ( ) NO
	Denso Tape		Company Spec/Standard	(✓) YES ( ) NO
	WD-40		Company Spec/Standard	(✓) YES ( ) NO
History Review	Before starting work, tasks preparation at least 1 day prior to starting work: 1. Review history PM/ CM from Roving Team, 2. Review last PM/ CM/ PMI from Crane Mech, 3. List out all punch list and prepare parts. 4. Review last Certificate task performed		API RP 2D	(✓) YES ( ) NO
	Require to update part history from Crane Mech on following main compenents to ensure the right parts are prepared: - Aux/ Main/ Boom Cylinder, Engine, Swing Gearbox, etc. Reference: Crane OEM information of each part need to be recorded - Manufacturer & Contact info - Model & serial number - Installation date		Company Spec/Standard	(✓) YES ( ) NO
	Review history data from Certificates and incorporate into current PM: - Pull Test Certificates (ongoing update, 4 yr. history). - Load Test Certificates (ongoing update, 4 yr. history). - Wire Rope Certifications (running rope and standing rope) (life of rope). - Hoist Certifications for hoist classified as "personnel handling" hoist.		API RP 2D	(✓) YES ( ) NO
	Review Last Preventative Maintenance Records (Inspection Reports) - Pre-use (Pre-Post Inspection) - 6 Monthly (API RP 2D Not Defined, Company Standard) - 1 Yearly (API RP 2D Defined Annual Inspection)		API RP 2D	(✓) YES ( ) NO
Lifting Gear Preparation	Visually inspect (Sling, sling hooks and shackles) include Websling / Chain		Company Spec/Standard	(✓) YES ( ) NO
	Check color code / Tag & date inspection		Company Spec/Standard	(✓) YES ( ) NO
General	Determine if access route to-from crane is clean, safe, unobstructed and adequately protected against falls, tripping and slipping		Company Spec/Standard	(✓) YES ( ) NO
	Check drain lines and drip pans for deterioration		API RP 2D	(✓) YES ( ) NO
	Remove any sediment collected in the bottom of drip pans		Industry Standard	(✓) YES ( ) NO
	Check for general crane and components for loss of protective coating and corrosion		Industry Standard	(✓) YES ( ) NO
	Check for missing or loose ,corrosion, deformation pins, pin keepers, bolts, nuts, fasteners of all laders, cages and working platform		API RP 2D	(✓) YES ( ) NO
	Apply grease to exposed grease parts (control valve spools, ball-ring gear, parking brake valve, etc.)		OEM Manual	( ) YES ( ) NO
Prime Mover	Engine Caterpillar		OEM Manual	( ) YES ( ) NO
	CATERPILLAR MODEL 3126	S/N.:	OEM Manual	182-4383
		AR.No.:	OEM Manual	92R03565
	Change engine lube oil & oil filter and check the condition of old oil. As found ; Change		OEM Manual	(✓) YES ( ) NO
	Check diesel tank level, top up if required.		OEM Manual	(✓) YES ( ) NO
	Check / Clean crankcase breather cap. Change if required		OEM Manual	(✓) YES ( ) NO
	Check / Clean air cleaner filter, Replace if require. (Note : include inspect air cleaner housing)		OEM Manual	(✓) YES ( ) NO
	Check condition and inspect of the radiator and cap.		OEM Manual	(✓) YES ( ) NO
	Check for any signs of leaks on or around the engine ie; Crankshaft seal for front & rear seal , Engine oil cooler. As found; OK		OEM Manual	(✓) YES ( ) NO
	Check condition exhaust system for leaks, corrosion, insulation and general. As found ; OK		OEM Manual	(✓) YES ( ) NO
	Check condition of all engie hoses and tube. (Fuel supply,Cooling system and Lube oil system. As found; OK		OEM Manual	(✓) YES ( ) NO
	Drain water and sediment form diesel tank. As found ; OK		OEM Manual	(✓) YES ( ) NO
	Check / Clean Diesel tank level sightglass and diesel tag.		OEM Manual	(✓) YES ( ) NO
	Apply grease of fan bearing/shaft.		OEM Manual	(✓) YES ( ) NO
	Check and inspect the vibration damper and pulley. As found ; OK		OEM Manual	(✓) YES ( ) NO
	Change water coolant and check condition base of water coolant and record PH.		OEM Manual	(✓) YES ( ) NO
	COOLANT PARAMETERS (PH):	6 or higher	OEM Manual	PH = 7
	HOUR METER PARAMETERS:	LAST READING 1,930 HRS	OEM Manual	1,969 HRS
	Check and retigthen the bolts of all engine base. / Inspection mouting rubber. As found ; OK		OEM Manual	(✓) YES ( ) NO
	Inspect the engine fan blades that there is a break is it severely distorted or rusted. As found ; OK		OEM Manual	(✓) YES ( ) NO

[redacted] / 15 Nov 25

SYSTEM	TASK			Specification	Record/Reading
	Change and adjust the tension engine belts. Remark; To check belt Tension, after has engine run more than 30 minules apply 400 N (90 lbs) of force midway between the pulleys. Correctly adjusted belts with deflect 13 to 19 mm (1/2 to 3/4 inch).			OEM Manual	(✓) YES ( ) NO
	Check engine HYD starter drive gear bendix and fly wheel gear teeth condition and record. **Replace if required"			OEM Manual	(✓) YES ( ) NO Bendix Gear: 85 % Fly wheel Gear teeth: 85 %
	Check and inspect condition the Bendix of hydraulic Starter motor.			OEM Manual	(✓) YES ( ) NO
	Lubricate and check engine throttle system.			OEM Manual	(✓) YES ( ) NO
	Determine if the tachometer operates properly: Record Value of Idle & Max Speed (RPMs) Note: Too low Idle (RPMS) will cause excessive worn at winch brake			OEM Manual	
	ENGINE RPM SPECIFIC	IDLE SPEED	850-950 RPM	OEM Manual	850 RPM
		MAX SPEED	2200 RPM	OEM Manual	2200 RPM
	Confirm engine oil pressure as per Parameters below and Record Value:			OEM Manual	
	ENGINE OIL PRESSURE SPECIFIC	Minimum	Not lower then 30 PSI	OEM Manual	40 PSI
		Maximum	70 PSI	OEM Manual	70 PSI
	Confirm engine fuel pressure Parameters are correct and Record Value:			OEM Manual	
	ENGINE FUEL PRESSURE SPECIFIC** ***Note;Fuel pressure at high idle is lower than 105 kPa (15 psi)RAMETERS*	Normal	Green Range/ 15 PSI	OEM Manual	(✓) YES ( ) NO
	Confirm engine temperature Parameters and Record Value:			OEM Manual	
	ENGINE WATER TEMP SPECIFIC	NORMAL	120 - 180 degrees F	OEM Manual	140 F
	Test engine SAFETY DEVICE- ensure engine kill cable shuts off FUEL supply			API RP 2D	(✓) Function ( ) False
	Test engine SAFETY DEVICE- ensure EMERGENCY KILL CABLE - shuts off AIR supply			API RP 2D	(✓) Function ( ) False
	Test engine SAFETY DEVICE- ensure ENGINE low lube oil - releases OIL PRESSURE to ctivate Alarm Air System ****Note*** Engine oil pressure low alarm at 20 PSI*			Company Spec/Standard	(✓) Function ( ) False
	Test engine SAFETY DEVICE- ensure HIGH TEMP - releases OIL PRESSURE to activate Alarm Air System			Company Spec/Standard	(✓) Function ( ) False
	Change water separator filter.			OEM Manual	(✓) YES ( ) NO
	Check the general conditionand functioning of turbocharger. Note;			OEM Manual	( ) Leak (✓) Not Leak
	Change fuel filter and inspect the primary hand pump.			OEM Manual	(✓) YES ( ) NO
	Check general condition the Governor and control linkage. (Inspect the throtle linkage)			OEM Manual	(✓) YES ( ) NO
	Check or adjust the engine valve lash. (Intake vale = 0.015", Exhaust valve = 0.025")			OEM Manual	(✓) YES ( ) NO
	Check or adjust the fuel timing control linkage of Unit Injector (CAT 3126) Reference: Fuel timing injection length, use the following references to obtain information: - Engine Information Plate (located at valve cover) Specific data .....mm/inch. Engine S/N..... - TMI (Technical Marketing Information - located at Manual Book) - Fuel setting and related Information Fiche			Company Spec/Standard	65.09 mm/ inch (After Adjustment)
	Check condition wear of pump drive spline and record ***Note; Remaining 70% of Original Spline Surface must be replace.*			Company Spec/Standard	85 % Remaining
	Check condition wear of adaptor Coulping spline shaft and record ***Note; Remaining 70% of Original adaptor Coulping spline shaft Surface must be replace.*			Company Spec/Standard	85 % Remaining
	Check condition wear of Coulping spline and record. Re-tigthen of all lock bolts. ***Note; Remaining 70% of Original adaptor Coulping spline shaft Surface must be replace.*			Company Spec/Standard	85 % Remaining
Hydraulic Start System (Apply for C2-Remote P/F Only)	Check pressure system at the pressure gauge which should reach 3,000 PSI as standard when the system is FULLY charged. Record Value. (As the system cools down, the pressure should drop slightly and finally stabilised.)			OEM Manual	(✓) YES ( ) NO
	Visually inspect all hydraulic connections and hoses for leaks and retighten if necessary. (Caution: This should NOT be done if the system is under pressure.) 1. Slowly release system pressure by loosening the bleed screw on top of the hand pump. 2. Ensure no pressure remains, retighten the suspected leak fitting or replace the damaged hose or component. 3. Retighten the bleed screw on the hand pump. 4. Pump the system up to 2200 - 2600 PSI 5. Inspect that the leak was eliminated.			OEM Manual	(✓) YES ( ) NO
	Function check Accumulator Pre-charge. (Caution: This should NOT be done if the system is under pressure.) 1. Shut the engine off, release system pressure via the bleed screw on top of the hand pump 2. Retighten bleed screw and actuate the hand pump. The pressure will rapidly increase and then stabilised. This pressure is related to accumulator gas pre-charge pressure. 4. If the pressure rapidly increase to 3000 PSI, it indicates that the accumulator has lost its gas charge. 5. Troubleshoot as necessary			OEM Manual	(✓) YES ( ) NO
	Check function rechaging system by function boom down while the engine running. 1. The crane engine is running at 1,000-1500 RPM. 2. Slowly control lever boom function down for charging pressure to accumulator. 3. This pressure should read on prssure gauge between 2200 - 2600 PSI depending on the recharge ratio 80% std. (90% optional). Record Pressure Value.			OEM Manual	2500 PSI
	Check Nitrogen pressure in Accumulator ***Note**spec @ 1,500 psi as follow schematic and if found pressure loss below 1400 PSI then prepare recharge nitrogen in system			OEM Manual	1500 PSI
Pneumatic System	Check for noisy compressor operation, which could indicate a worn drive gear coupling, a loose pulley or excessive internal wear			OEM Manual	(✓) YES ( ) NO
	Check Air Compressor external oil supply and return lines, if applicable, for kinks, bends, or restrictionsto flow			OEM Manual	(✓) YES ( ) NO
	Inspect the Air compressor discharge port, inlet cavity and discharge line for evidence of restrictions and carboning. (If excessive buildup is noted)			OEM Manual	(✓) YES ( ) NO
	Check all hose connections are sound and all mounting and pivoting connections are secure.			OEM Manual	(✓) YES ( ) NO
	Check condition / Clean and lubricate unloading valve			OEM Manual	(✓) YES ( ) NO
	Check proper air pressure is available for the system. Record Value.			OEM Manual	
	AIR SYSTEM PARAMETERS:		MAX 60 PSI	OEM Manual	60 PSI
	Visually inspection condition of air receiver for signs of corrosion or loose of structural integrity.			Industry Standard	(✓) YES ( ) NO
	Check the hose, piping and tubing for mechanical damage, corrosion, splits, blisters, cracking or excessive abrasion on the outer surface			Industry Standard	(✓) YES ( ) NO
	Drain off air filter and reciever to remove condensed water. If water is present, drain until water is removed.			Industry Standard	(✓) YES ( ) NO
	Check proper operation of pop off valve, by manually functioning valve.			Industry Standard	(✓) YES ( ) NO
	Check proper operation of manual latch valve, by manually functioning latch.			Industry Standard	(✓) YES ( ) NO
	Check proper operation of small engine alarm horn.			Industry Standard	(✓) YES ( ) NO
Hoist / Brakes	Visually check a hoist exhibits erratic operation and/or unusual noise, the hoist must be taken out of service until it is inspected and serviced by a qualified technician. Continued operation of a hoist with a defect in a critical component may lead to loss of load control, property damage, serious injury or death.			OEM Manual	(✓) YES ( ) NO
	Visual exteriors of hoist, frames, drums and flanges for damage, leaks, cracks and wear and repair/replace as required to maintain the structural integrity of the hoist.			OEM Manual	(✓) YES ( ) NO
	Check all hoist mounting pins, bolts or other fasteners and replace or tighten as necessary.			OEM Manual	(✓) YES ( ) NO

[redacted] / 15 Nov 25

SYSTEM	TASK			Specification	Record/Reading
	Lubricant level must be maintained between the minimum and maximum levels; midway up sight glass or at bottom of level plug port as equipped and check/clean plug vent. Use only the recommended type of lubricant.			OEM Manual	(✓) YES ( ) NO
	Inspect Brake Valve Opening Pressure test V/V 1-1/4" PD Series : no lower than 550 PSI V/V 1-1/2" CH Series : no lower than 575 PSI	Main		Braden Bulletin 527-Dec,1996	600 PSI
		Aux			600 PSI
	Inspect Brake cylinder opening pressure test. CH/PD Series : 400-450 PSI.	Main		Industry Standard	400 PSI
		Aux			350 PSI
	Measure differancian of static and dynamic brake. CH/PD Series : 150-250 PSI.	Main		Industry Standard	200 PSI
		Aux			250 PSI
	Check for external oil leaks and repair as necessary. This is extremely important due to the accelerated wear that will result from insufficient lubricating oil in the hoist.			OEM Manual	(✓) YES ( ) NO
	RECORD BOOM CYLINDER INFORMATION :	Boom cylinder Diameter:		OEM Manual	DIA: 12 Inch
		CY Number:		OEM Manual	L= 6169-A2 R= 6169-A1
		Serial Number:		OEM Manual	L= 5466 R= 5465
	RECORD MAIN HOIST INFORMATION :	Manufacturer:		OEM Manual	Braden
		Model:		OEM Manual	CH175A-2990-02-1
		Serial Number:		OEM Manual	0607421
	Check MAIN HOIST for proper operation and good condition			API RP 2D	( ) YES ( ) NO
	Brake test & record pressure of MAIN HOIST.			OEM Manual	(✓) YES ( ) NO As found OK
	Change main hoist gear oil and inspect for small particles in the old oil. ** Refer to Onsite Gear Oil Sample Procedure ** ** Replace and send oil sample to SKL if abnormal ** ** Take photo of Oil Sampling for Reference**			OEM Manual	(✓) YES ( ) NO As found OK
	RECORD AUXILIARY HOIST INFORMATION :	Manufacturer:		OEM Manual	Braden
		Model:		OEM Manual	PD170-2990-04-1
		Serial Number:		OEM Manual	1855564
	Check AUXILIARY HOIST for proper operation and good condition			API RP 2D	(✓) YES ( ) NO
	Brake test & record pressure of AUXILIARY HOIST			API RP 2D	(✓) YES ( ) NO
	Change Aux. hoist gear oil and inspect for small particles in the old oil. ** Refer to Onsite Gear Oil Sample Procedure ** ** Replace and send oil sample to SKL if abnormal ** ** Take photo of Oil Sampling for Reference** Please record if any abnormal condition. Note.....			OEM Manual	( ) SEND SKL LAB (✓) NOT SEND SKL LAB
	Check pressre relief Valve: Determine hoistes' relief valve pressure gauge is working and giving accurate measurement by notice whether pressure gauge is vibrating or not. If not, set relief valve pressure in accordance with the schematic and parameters below. Record all readings.			OEM Manual	(✓) YES ( ) NO
	BOOM RELIEF VALVE TEST	Relief Specific:	3,000 PSI	OEM Manual	3000 PSI
	MAIN HOIST RELIEF VALVE TEST	Relief Specific:	3,000 PSI	OEM Manual	3085 PSI
	AUX HOIST RELIEF VALVE TEST	Relief Specific:	2,700 PSI	OEM Manual	2800 PSI
	SWING RELIEF VALVE TEST	Relief Specific:	1,500 PSI	OEM Manual	1300 PSI
	Measure Pressure of hoist motor case drains and Record Value Reference Bulletin: BRADEN Inspection, Testing, Preventive Maintenance and Special Operating Instructions For Planetary Hoists PB-308 latest edition for further details.			OEM Manual	
	MAIN HOIST CASE DRAIN for Gear Motor (Down Mode).	PRESSURE	< 100 psi	Company Spec/Standard	20 PSI
	AUX. HOIST CASE DRAIN for Gear Motor (Down Mode).	PRESSURE	< 100 psi	Company Spec/Standard	10 PSI
Hydraulic System	Check hydraulic tank oil level. Oil should be visible in the sight glass. Top up as required (3/4 Tank Minimum)			OEM Manual	( ) YES ( ) NO
	Check hydraulic oil condition. (Check if running hours are more than 100 hours from last oil change or during Annual inspection) ** Refer to Onsite Hydraulic Oil Sample Procedure ** ** Replace and send oil sample to SKL if abnormal ** ** Take photo of Oil Sampling for Reference**		Rando HD-68	Company Spec/Standard	( ) SEND SKL LAB (✓) NOT SEND SKL LAB
Hydraulic System	Drain off 1 liter of oil to remove condensed water. If water is present, drain until water is removed and top up with clean oil			Industry Standard	(✓) YES ( ) NO
	Check for any hydraulic leaks			Industry Standard	(✓) YES ( ) NO
	Check the hydraulic hose, piping and tubing for mechanical damage, corrosion, splits, blisters, cracking or excessive abrasion on the outer surface			API RP 2D	(✓) YES ( ) NO
	Check that all hydraulic hose connections are sound and that all mounting and pivoting connections are secure.			Industry Standard	(✓) YES ( ) NO
	Lubricate hydraulic swivel in pedestal and insure tie down restrains are in place and preventing the swivel from rotating with the crane structure.			OEM Manual	(✓) YES ( ) NO
	Ensure the filler breather on tank is not covered or clogged			Industry Standard	(✓) YES ( ) NO
	Visually inspect for missing or loose pins, pin keepers, bolts, nuts, fasteners on all pumps, motors and valves			API RP 2D	(✓) YES ( ) NO
	* Re-tighten the stud bolt of hydraulic main pump and marking the nut for checking to prevent loosening. Note : Torqe spec model P76, P75, PGP/PGM350 ,PGP/PGM330 = 200 ft-lbs. , for model PGP/PGM315 = 140 ft-lbs. and PGP/PGM365 = 450 ft-lbs.			The Commercial Intertech manual	(✓) YES ( ) NO
	Check the filter bypass indicator, while engine is running.			OEM Manual	(✓) YES ( ) NO
	With engine running (after all other items pass inspection), check the system for leaks around fittings, hoses, valves and reservoirs			Industry Standard	(✓) YES ( ) NO
	With engine running, check the source of any unusual noise or vibration that may cause or indicate equipment damage or wear			Industry Standard	(✓) YES ( ) NO
	Ensure all hoses are properly rated for the system, see "Parameters" for each system for details.			Industry Standard	(✓) YES ( ) NO
	Record hydraulic oil operating temperture. Note: Hydraulic fluid overheating temperature is over 180 F degrees or 82 C, degrees (reservoir temperature)			Industry Standard	120 Degree F
	Determine if hydraulic return pressure gauge is working and giving accurate measurements. Record readings				
	RECORD HYDRAULIC RETURN PRESSURE PARAMETERS:		60 PSI "maximum"	OEM Manual	80 PSI
	Check and inspect the hydraulic return filters and seals.			OEM Manual	(✓) YES ( ) NO
	Function Testing and record pressures with engine at :		2,200 RPM	API RP 2D	
	BOOM FUNCTION TEST (Need Crane Mech to verify each platform)			OEM Manual	
	Boom Angle : 60 Degree (Recommend or as applicable)	UP	Cracking pressure	RECORD	OEM Manual 1400 PSI
			Full Speed Pressure	RECORD	OEM Manual 1500 PSI
			Cracking pressure	RECORD	OEM Manual 900 PSI

[redacted] / 15 Nov 25

SYSTEM	TASK				Specification	Record/Reading
		DOWN	Full Speed Pressure	RECORD	OEM Manual	1200 PSI
	MAIN HOIST FUNCTION TEST (Need Crane Mech to verify each platform)				OEM Manual	
	Boom Angle : 60 Degree (Recommend or as applicable)	UP	Cracking pressure	RECORD	OEM Manual	400 PSI
			Full Speed Pressure	RECORD	OEM Manual	700 PSI
		DOWN	Cracking pressure	RECORD	OEM Manual	600 PSI
			Full Speed Pressure	RECORD	OEM Manual	1300 PSI
	AUX HOIST FUNCTION TEST (Need Crane Mech to verify each platform)				OEM Manual	
	Boom Angle : 60 Degree (Recommend or as applicable)	UP	Cracking pressure	RECORD	OEM Manual	400 PSI
			Full Speed Pressure	RECORD	OEM Manual	800 PSI
		DOWN	Cracking pressure	RECORD	OEM Manual	900 PSI
			Full Speed Pressure	RECORD	OEM Manual	1700 PSI
	SWING FUNCTION TEST (Need Crane Mech to verify each platform)				OEM Manual	
	Boom Angle : 60 Degree (Recommend or as applicable)	LEFT	Cracking pressure	RECORD	OEM Manual	300 PSI
			Full Speed Pressure	RECORD	OEM Manual	1300 PSI
		RIGHT	Cracking pressure	RECORD	OEM Manual	300 PSI
			Full Speed Pressure	RECORD	OEM Manual	1300 PSI
Electrical system, Crane Boom Lighting and red obstruction light	Check the electrical junction boxes, wires and connections for deterioration, desiccant bags, (replace as required)				Industry Standard	(✓) YES ( ) NO
	Check the condition of the grounding and lighting protection system.				Company Spec/Standard	(✓) YES ( ) NO
	Visually inspect boom floodlight and light guards for loose, missing, corroded				Company Spec/Standard	(✓) YES ( ) NO
	Check condition pipe support , U-bolt ,nuts of boom floodlight and Electric slipring for loose , missing , corroded				Company Spec/Standard	(✓) YES ( ) NO
	Check Electric slipring/swivel for 360° continuous rotation				OEM Munnal	(✓) YES ( ) NO
	Check Water ingress, condensation in electric slipring, red obstruction light and boom floodlight				OEM Munnal	(✓) YES ( ) NO
	Check feely movement and lubricate of boom floodlight				OEM Munnal	(✓) YES ( ) NO
	With generator in operation, intergize all lights to unsure proper function.				API RP 2D	(✓) YES ( ) NO
	Check condition of crane boom lighting and safety net is secured with strong point. * **Safety net should be replace 24 months after installation (2 year)***			Last installation date _____	Company Spec/Standard	(✓) YES ( ) NO
	Check function of crane sound signal				Company Spec/Standard	( ) YES (✓) NO ( ) N/A
	Check function of crane boom lighting at boom upper section				Company Spec/Standard	(✓) YES ( ) NO ( ) N/A
	Check function of crane boom lighting at boom lower section				Company Spec/Standard	( ) YES (✓) NO ( ) N/A
	Check function of crane boom lighting at winch skid				Company Spec/Standard	(✓) YES ( ) NO ( ) N/A
	Check function of crane boom lighting at crane cabin				Company Spec/Standard	(✓) YES ( ) NO ( ) N/A
	Check function becon light at boom tip				Company Spec/Standard	( ) YES (✓) NO ( ) N/A
	Inspection wire rope guide & Roller assembly				Company Spec/Standard	(✓) YES ( ) NO
	Visually inspect red obstruction light pipe support, u-bolts, nuts connection to hand rail for loose, missing, corroded				Company Spec/Standard	(✓) YES ( ) NO
	Visually inspect safety sling attached to the red obsruction light and its base for loose, missing, corroded				Company Spec/Standard	(✓) YES ( ) NO
	Visually inspect red obstruction light function. The light is designed to turn on all the time.				Company Spec/Standard	(✓) YES ( ) NO
Operator Control Station	Check general condition of control panel, bolts, paint security, etc.				API RP 2D	(✓) YES ( ) NO
	Determine if there is a serviceable fire extinguisher in the vicinity of the crane				Company Spec/Standard	(✓) YES ( ) NO
	Determine if correct load chart is in use and easily visible for operator				API RP 2D	(✓) YES ( ) NO
	Determine if charts, indicators and hand signal chart are in the cabling and firmly attached				API RP 2D	(✓) YES ( ) NO
	Determine if angle/radius indicator plate is easily visible to operator and is moving freely.				API RP 2D	(✓) YES ( ) NO
	Check condition of control levers and determine if they "dead-man" back to the neutral position.				API RP 2D	(✓) YES ( ) NO
	Check condition of pressure gauges.				API RP 2D	(✓) YES ( ) NO
	Check proper control labels are firmly installed, completely legible and properly labeled				API RP 2D	(✓) YES ( ) NO
	Check controls for freedom-of-movement				API RP 2D	(✓) YES ( ) NO
	Check condition , Leak, freely moement of Dynamic swing break system *** Note; If HYD Oil loose in CYD reservoir must be refill*				OEM Manual	(✓) YES ( ) NO
	Check condition , Leak, freely moement of Accelerate System *** Note; If HYD Oil loose in CYD reservoir must be refill*				OEM Manual	(✓) YES ( ) NO
	Check all safety glass and rubber seal for proper condition / Front glass missing.				API RP 2D	(✓) YES ( ) NO ( ) N/A
	Function Test Horn. Note;.....				Industry Standard	(✓) YES ( ) NO ( ) N/A
	Ensure PRE/POST Check List and Pocket Manual in the cabin. Note;.....				Company Standard	(✓) YES ( ) NO ( ) N/A
Load Indicator System	Visual check on fittings and connections for leaks. Fix leak if any. Note;.....				OEM Manual	(✓) YES ( ) NO
	Should any leaks exist, stop leak and recharge system, refer to maintenance manual				OEM Manual	(✓) YES ( ) NO
	Change and flushing Load cell fluid.				OEM Manual	(✓) YES ( ) NO
	Check general condition of tubbing, hoses, pins bolts, paint, etc.				Industry Standard	(✓) YES ( ) NO
	Insure load cell is free of obstructions				OEM Manual	(✓) YES ( ) NO
	Check condition of gauge(s) face and clean glass as required.				OEM Manual	(✓) YES ( ) NO
	Check the scale's operation and weighing accuracy. (Main Hoist) Remark : Maximum variance +/- 2% Note;.....				Company Spec/Standard	(✓) YES ( ) NO ( ) N/A
	Check the scale's operation and weighing accuracy. (Aux. Hoist) Remark : Maximum variance +/- 2% Note;.....				Company Spec/Standard	(✓) YES ( ) NO ( ) N/A
	Check the internal casting fluid of weight indicator. top up if required				Industry Standard	(✓) YES ( ) NO ( ) N/A
	Insure SWL tag matches ratings on the Crane Load Chart.				OEM Manual	(✓) YES ( ) NO ( ) N/A
	Insure Boom Length, matches the Crane Load Chart				OEM Manual	(✓) YES ( ) NO ( ) N/A
	Insure Boom Angle measurements and readings match the boom angle indicator.				OEM Manual	(✓) YES ( ) NO ( ) N/A
	Insure Boom Radius measurements indicate the distance from center line of the crane to the hook				OEM Manual	(✓) YES ( ) NO ( ) N/A
	Check Main load cell gap 1/4 (0.250) inch				OEM Manual	(✓) YES ( ) NO ( ) N/A
	Check Aux load cell gap 3/8(0.380) inch (Compression Load Cell Type)				OEM Manual	(✓) YES ( ) NO ( ) N/A
Pedestal & Structure	Visually check Pedestal for chipped/cracked paint, deformation, worn parts, dents, corroded areas, cracks weld, etc.				API RP 2D	(✓) YES ( ) NO
	Check water rain drain at pedestal must be not obstuct				Industry Standard	(✓) YES ( ) NO

[redacted] / 15 Nov 25

SYSTEM	TASK	Specification	Record/Reading
	Check pin and cotter pin of pedestal missing , corrosion, wear, damage and exercise pin.	Industry Standard	(✓) YES ( ) NO
	Visually check Base - Plate connection and Base hoist Structure for chipped/cracked paint, deformation, worn parts, dents, corroded areas, cracks weld, etc.	API RP 2D	(✓) YES ( ) NO
	Check A fixed such as Handrial, Walkway, Grating, stationary structure without significant movement in response to waves and currents in normal operating conditions.	API RP 2C	(✓) YES ( ) NO
	Visually check and lubricate maintenance Jib. ***Note*** if on pedestal crane	OEM Manual	(✓) YES ( ) NO ( ) N/A
	Check maintenance jib is secure firmly. ***Note*** if on pedestal crane	OEM Manual	(✓) YES ( ) NO ( ) N/A
Box Boom & Luffing CYD	Check and Verify entire box boom and Boom CYD for loss of protective coating and corrosion. Note;.....	API RP 2D	(✓) YES ( ) NO
	Check and Verify entire box boom and Boom CYD for chipped/cracked paint, deformation, worn parts, dents, corroded areas, cracks, etc. Note;.....	API RP 2D	(✓) YES ( ) NO
	Check and Verify boom end connections, for bends, dents, corroded areas, cracked welds, and signs of mechanical damage, wear, etc. **any deviation should be reported**	API RP 2D	(✓) YES ( ) NO
	Check and Verify boom rest and wooden support to ensure it's in good condition	API RP 2D	(✓) YES ( ) NO
	Inspect pin and pin holes of Upper tank and Lower tank for excessive clearance	OEM Manual	(✓) YES ( ) NO
	BOOM CYLINDER PIN MAXIMUM TOLERANCE — 0.125 Inch (3mm)	Industry Standard	As found: OK
	Check BOOM CYLINDERS for proper operation and good condition	API RP 2D	(✓) YES ( ) NO
	Check Boom cylinder barrels and rods for leaks, mechanical damage and corrosion	Industry Standard	(✓) YES ( ) NO
	Check and measurement boom foot pin and connection pins for clearance	Industry Standard	
	BOOM FOOT PINS & BOOM BOX CONNECTER PIN TOLERANCE — 0.125 Inch (3mm)	Industry Standard	
	Boom Foot Pin Tolerance	Industry Standard	0.035 inch
	Boom Box Connecter Pin Tolerance	Industry Standard	0.035 inch
	Check connecting bolts of box boom loose, corrosion, wear, damage	OEM Manual	(✓) YES ( ) NO
	Lubricate boom foot pins and bushings	OEM Manual	(✓) YES ( ) NO
	Lubricate boom cylinder pins, bearings and bushings	OEM Manual	(✓) YES ( ) NO
	Boom function test angle/radius to correction **Note; The cylinder(s) mechanism shall be capable of elevating the boom from a minimum of zero degrees to the maximum recommended boom angle.	API RP 2C	(✓) YES ( ) NO
	Operation functional test and verify Boom Creeping down **Note ; Test at angle 60°	Industry Standard	(✓) YES ( ) NO As found: OK
Wire Rope	Determine if parts-of-line match parts of line on the load chart in the crane cabin.	API RP 2D	(✓) YES ( ) NO
	Determine if visible portion of wire rope adequately lubricated. If not lubricate wire rope	API RP 2D	(✓) YES ( ) NO
	For each layer of wire rope on drum, check that all rope is parallel and each crossover point at hoist flanges is correct	API RP 2D	(✓) YES ( ) NO
	The top layer of rope must not be lower to the flange tips 2.5 in for Smooth drum,2 in for groove drum or 2.5 times of wire rope diameter	API RP 2C	(✓) YES ( ) NO
	Inspect wire rope for, kinking, crushing, broken wires, necking down of rope diameter, worn outside wires, corroded or broken wires at end connection, cutting or unstringing.	API RP 2D	(✓) YES ( ) NO As found: OK
	NoteRunning Ropes of rotation-resistant construction used in the main or auxiliary Hoist: - Four (4) Randomly distributed broken wires within 30 rope diameter - Two (2) broken wires in one stand within 6 rope diameter	API RP2D Edition 7	(✓) YES ( ) NO As found: OK
	One valley break can indicate internal rope damage requiring close inspection of this section of the rope. When one or more valley breaks are found in one lay length the rope should be retired.	API RP2D Edition 7	(✓) YES ( ) NO As found: OK
	Reductions for the rope diameter, from initial wire rope dimensional measurements, in a nonworking area (an area away from the sheaves) compared to the lowest diameter of rope measured in three working areas (areas where the rope regularly goes over a sheave) of more than the following is observed: — 3/64 in. (0.047 in.) (1.2 mm) for diameters up to and including 3/4 in. (19.1 mm); — 1/16 in. (0.062 in.) (1.6 mm) for diameters of 7/8 in. to 1-1/8 in. (22.2 mm to 28.6 mm); — 3/32 in. (0.093 in.) (0.8 mm) for diameter of 1-1/4 in. to 1-1/2 in. (31.8 mm to 38.1 mm); — For rope diameters greater than 1-1/2 in., a 5 % diameter loss from baseline measurement. --Wear of one-third the original diameter of the outside individual wires.	API RP2D Edition 7	(✓) YES ( ) NO As found dimension: OK
	Increase in the length of an individual rope lay is observed. This increase in lay length and accompanying reduction in diameter can be caused by failure of the core. This can occur more readily in ropes or rotation-resistant construction.	API RP2D Edition 7	(✓) YES ( ) NO As found: OK
	-Inspection and Verify running and standing rope from heat effect **Note; Not more than 250°C -There is evidence of heat damage from any source (i.e. engine exhaust, flare towers, stress corrosion cracking, etc.). Heat can be generated by passing a rope over a frozen or non-turning sheave, contact with structural members of the crane, improperly grounded welding leads or lightning strikes	Industry Standard	(✓) YES ( ) NO As found: OK
	With the boom at the highest possible angle and the main load block or overhaul ball at the water level, ensure there is a minimum of 5 wraps of wire-rope remaining on the drums. Note: (Thai law, requires minimum of 2 wraps)	API SPEC 2C / Thai Law	(✓) YES ( ) NO
	Reference: - Running rope safety factor not less than 6 for wire rope that are running wire, (Thai law; Wire rope nominal breaking strength x number parts of line / Design factor 6) - Standing rope safety factor not less than 3.5 for wire rope that are stay cables, (Thai law)	Thai Law	(✓) YES ( ) NO ( ) N/A
	Measure and record nominal diameter of "running ropes"main and auxiliary (particularly on drum, equalizer sheave and at sockets, clips and dead end points) *****Nominal = several measurements added together divided by Number of measurements*****	API RP 2D	(✓) YES ( ) NO
	Inspect wire rope and record dimension.	API RP 2D	
	MAIN WIRE ROPE OD: — FULL DRUM	OEM Manual	0.632 inch
	MAIN WIRE ROPE OD: — HALF DRUM	OEM Manual	0.645 inch
	MAIN WIRE ROPE OD: — WATER LEVEL	OEM Manual	0.634 inch
	AUX WIRE ROPE OD: — FULL DRUM	OEM Manual	0.648 inch
	AUX WIRE ROPE OD: — HALF DRUM	OEM Manual	0.652 inch
	AUX WIRE ROPE OD: — WATER LEVEL	OEM Manual	0.647 inch
	Slip-Cut 1 meter of all ropes at the wedge socket and re-wedge to prevent rust inside of wedge socket (at outward end of rope, not on hoist drum) Dead end tail length is never less than 6 inches, or: - Standard 6 to 8 Strand wire rope is not less than 7 times the rope diameter - Rotation Resistant Wire Rope is not less than 20 times the rope diameter	Company Spec/Standard	(✓) YES ( ) NO
	U-bolt and Fist Grip Clips: Extreme care should be exercised to assure proper orientation of U-bolt clips. The U-bolt segment shall be in contact with the wire rope dead-end. The orientation, spacing, torquing, and number of all clips shall be in accordance with the crane manufacture's specifications.	API SPEC 2C	(✓) YES ( ) NO

[redacted] / 15 Nov 25

SYSTEM	TASK	Specification	Record/Reading
	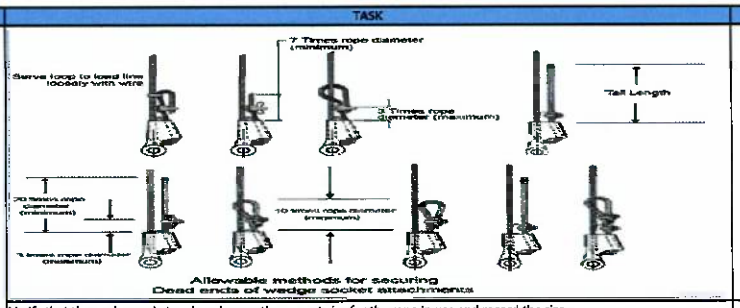	API SPEC 2C	Model and Size wedge socket. Main hoist. Model..... Size.....5/8..... Aux.Hoist. Model..... Size.....5/8.....
	Verify that the wedge socket and wedge are the correct size for the rope in use and record the size	API SPEC 2C	(✓) YES ( ) NO
Sheaves & Bearings	Lubricate all sheave bearings.	API RP 2D	(✓) YES ( ) NO
	Visually inspect all sheaves and bushings for cracks, wear and deterioration	API RP 2D	(✓) YES ( ) NO As found.....ok
	Visually inspect wire rope track of sheave for rope imprints, wear and deterioration. If damage exist sheave should be resurfaced or replaced.	API RP 2D	(✓) YES ( ) NO As found.....ok
	Pins retained by snap rings, bolt lock shafts, plates lock should be checked for missing or loose for all	API RP 2D	(✓) YES ( ) NO
	Check wirerope guards and keepers for proper location and condition.	API RP 2D	(✓) YES ( ) NO
	Determine if wire rope is jumping the sheaves, by looking for signs of damage on the sheave brim	Industry Standard	(✓) YES ( ) NO
	Sheave Rope Profile for optimum Rope life the sheave groove profile should be correctly matched to the rope diameter	Industry Standard	(✓) YES ( ) NO
	Check rope sheave should be machine grooved to adepth of not less than 1.5 times the norminal diameter of the rope	Industry Standard	(✓) YES ( ) NO
	MAIN POINT SHEAVES: Note;.....	Industry Standard	No.1 (✓) YES ( ) NO No.2 (✓) YES ( ) NO
	AUX SHEAVES: Note;.....	Industry Standard	No.1 (✓) YES ( ) NO
	IDLER SHEAVES: Note;.....	Industry Standard	AUX. (✓) YES ( ) NO Main (✓) YES ( ) NO
	Pins for bronze bushing and straight roller bearing should have a running clearnace of .031 inch/ sheave of end play and should be adjusted accordingly.(count from left)	Industry Standard	( ) YES ( ) NO
	MAIN POINT SHEAVES:	Industry Standard	Sheave No.1.....18..... inch Sheave No.2.....18..... inch
	AUX SHEAVES:	Industry Standard	Sheave No.1.....18..... inch
	IDLER SHEAVES:	Industry Standard	Sheave AUX.....18..... inch. Sheave Main.....18..... inch.
	Ensure the sheaves are aligned and the fleet angle is correct **Remark ; Wire rope User's Manual allows 2 degree on grooved winch drum, Smooth Drum shuold be not more than 1-1/2 degree	API RP 2D	(✓) YES ( ) NO
	Determine if wire rope size and sheave sizes/grooves are compatible and record size. Sheave pitch diameter (D) to nominal wire rope diameter (d) ratio (D/d) shall not be less than 18:1	API SPEC 2C	(✓) YES ( ) NO
	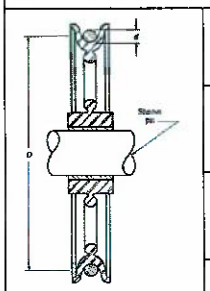 MAIN POINT SHEAVES: — SHEAVE D / WIRE ROPE d = >18	API SPEC 2C	18 inch (D) 0.625 inch (d) 28 (Ratio D/d)
	AUX SHEAVES: — SHEAVE D / WIRE ROPE d = >18	API SPEC 2C	14 inch (D) 0.625 inch (d) 22 (Ratio D/d)
	IDLER SHEAVES: — SHEAVE D / WIRE ROPE d = > 18 (If applicable)	API SPEC 2C	18 inch (D) 0.625 inch (d) 28 (Ratio D/d)
	MAIN BLOCK SHEAVES: — SHEAVE D / WIRE ROPE d = > 16	API SPEC 2C	16 inch (D) 0.625 inch (d) 25 (Ratio D/d)
Load Block	Load Block: Check the load block for cleanliness, binding sheaves, damaged or worn sheaves, worn or distorted sheave pins, broken bolts, and worn cheek weights. Note ;.....	Industry Standard	(✓) YES ( ) NO As found.....ok
	Hook: Check the hook damage, excessive wear to the hook safety latch, hook swivel trunnions, thrust collar, securing, damage or missing lubrication fittings, proper lubrication, cracks and gouges, and if visibly bent or twisted or has been exposed to welding or arching. Note ;.....	Industry Standard	(✓) YES ( ) NO As found.....ok
	Hook: Tip has been bent more than 10 degree out of plane from the hook body	Industry Standard/API RP2D7	(✓) YES ( ) NO As found.....ok
	Inspect the Pins for bronze bushing and straight roller bearing should have a running clearnace of .031 inch/ sheave of end play and should be adjusted accordingly	Industry Standard	(✓) YES ( ) NO
	Inspect Hook or shackle to swivel case clearance is set at .031 to .062 inch, Clearance exceeding .12 to .18 (ONLY CROSBY BRAND)	OEM Crosby	(✓) YES ( ) NO
	OEM STANDARD RECOMMEND that Crane block removal from service untill replaced and repair following below	OEM STANDARD	
	- Elongated center pin and hook trunnion holes exceeding 5% of Original diameter	OEM STANDARD	(✓) YES ( ) NO As found.....ok
	- Material loss due to wear exceeding 10% of original section	OEM STANDARD	(✓) YES ( ) NO As found.....ok

[redacted] / 15 Nov 25.

SYSTEM	TASK	Specification	Record/Reading
	-Sheave wire rop groove diameter smaller than 2.5%	OEM STANDARD	(✓) YES ( ) NO As found ok
	Loosened tie bolts nuts, center pin round nuts, check weight cap screws and hook nut cap screws. Tie bolt nuts to be torqued to 35-40 ft.Lbs and restaked, all other fasteners wrench tight	OEM STANDARD	(✓) YES ( ) NO
	Throat opening - any distortion causeing an increase in throat opening of 5% not ot exceed 1/4 in. (6 mm.)(or as recommended by the manufacturer)	ASME B30.10	(✓) YES ( ) NO
	Inspect rope track worn in sheave groove, sheave must be resurface or replace	API RP 2D	(✓) YES ( ) NO
	Ensure the load block is not using "Cast Iron" check weights they can not be used as per API	API SPEC 2C	(✓) YES ( ) NO As found ok
	Determine if all hooks are equipped with properly operating safety latches and check for proper functioning	API RP 2D	(✓) YES ( ) NO
	Lubricate sheave bearings and swivels	OEM Manual	(✓) YES ( ) NO
	Re-thighten nut firmly to point at which trunion will just rotate, the Re-tighten set-screw in nut and thread condition as in the picture below,	Industry Standard	(✓) YES ( ) NO
	Last NDE inspection record	Industry Standard	Last inspect date
	RECORD LOAD BLOCK INFORMATION : Manufacturer:	OEM Manual	MCKISSICK
	Model:	OEM Manual	MOKSDIGEH
	Serial Number:	OEM Manual	0640882
	Record Load block measurements and details for future comparison with historical data	Industry Standard	(✓) YES ( ) NO
	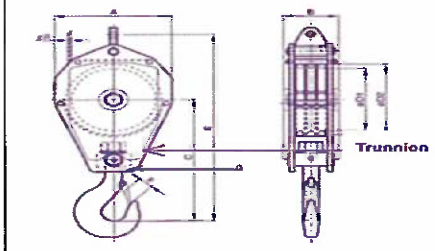 A - Block OD	Industry Standard	10 inch
	B - Block length	Industry Standard	14 inch
	C - Center of Pin to hook Saddle	Industry Standard	25.5 inch
	D1 - Sheave Diameter	Industry Standard	16. inch
	E - Block Width	Industry Standard	95 inch
	F - Throat Opening	Industry Standard	5. inch
	G - Trunnion	Industry Standard	0.044 inch
Aux. Ball	Inspect Auxiliary ball for cleanliness, binding swivel, work pad-eye hole. Inspect the hook damage, excessive wear to the hook safety latch, Bent connector plates,Severe corrosion pitting, hook swivel trunnions, thrust collar, securing, damage or missing lubrication fittings,Loose, missing or damaged retaining nuts, cotter pins or swivel set screws ,Missing or illegible rating and warning tags, proper lubrication, cracks and gouges, and if visibly bent or twisted or has been exposed to welding or arching.	Industry Standard	(✓) YES ( ) NO
	Hook: Tip has been bent more than 10 degree out of plane from the hook body	Industry Standard/API RP2D7	(✓) YES ( ) NO
	OEM STANDARD recommend that Crane overhaul ball removal from service untill replaced and repair following below	OEM STANDARD	
	- Elongated ball pin holes, hook latch pin holes and swivel eye exceeding 5% of original diameter,	OEM STANDARD	(✓) YES ( ) NO As found ok
	-Swivel end play gap exceeding .08". Excessive end play indicates damaged internal set screw	OEM STANDARD	(✓) YES ( ) NO As found ok
	-Material loss due to wear exceeding 10% of original section	OEM STANDARD	(✓) YES ( ) NO As found ok
	Throat opening - any distortion causeing an increase in throat opening of 5% not ot exceed 1/4 in. (6 mm.)(or as recommended by the manufacturer)	ASME B30.10	(✓) YES ( ) NO
	All hooks that lift personnel are to have a positive locking safety latch **locking Pin to be used while lifting personnel**	API RP 2D	(✓) YES ( ) NO
	*** Temperature Effected : When hooks are to be used at temperature above 400° F. (204°C) or below -40°F (-40°C), the hook manufacturer or a qualified person should be consulted *** Chemically Active Environment : The strength of hooks can be affected by chemically active environments, such as caustic or acid substances or fumes. The hook manufacturer or qualified person should be consulted before hooks are used in chemically active environment	ASME B30.10	
	Verify to ensure nut firmly at which trunion rotate. Identify to set-screw in nut/ swivel/ counter pin and thread condition.	Industry Standard	(✓) YES ( ) NO
	Last NDE inspection record	Industry Standard	Last inspect date 6 Dec 24
	RECORD AUX BALL INFORMATION : Manufacturer:	OEM Manual	MCKISSICK
	Model:	OEM Manual	M807T200E
	Serial Number:	OEM Manual	0641221.
	Record Auxiliary Ball measurements and details for future comparison with historical data: For Model M807T200E ONLY	Industry Standard	
	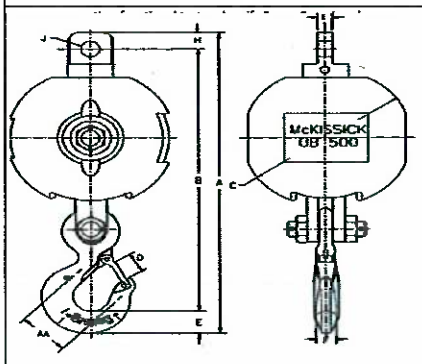 AA Dimensions 3.0 Inch	Industry Standard	3.0 inch
	A Dimensions 24.89 Inch	Industry Standard	24.8 inch
	B Dimensions 21.71 Inch	Industry Standard	21.7 inch
	C Dimensions 12.50 Inch	Industry Standard	12.5 inch
	D Dimensions 1.61 Inch	Industry Standard	1.6. inch
	E Dimensions 1.81 Inch	Industry Standard	1.8. inch
	F Dimensions 1.38 Inch	Industry Standard	1.35 inch
	H Dimensions 1.38 Inch	Industry Standard	1.35 inch
	I Dimensions 0.88 Inch	Industry Standard	0.85 inch
	J Dimensions 1.31 Inch	Industry Standard	2.13 inch
Safety system	Check Condition anti - two block , hanging chain ,eye bolts , fix bolts , shackle for missing , corrosion , erosion , deformation	API RP 2D	(✓) YES ( ) NO
	Check anti - two block kick out plate for freely movement	Company Spec/Standard	(✓) YES ( ) NO
	Check anti-2-block device proper function of Main winch	Company Spec/Standard	(✓) Function ( ) False
	Check anti-2-block device proper function of Aux. winch	Company Spec/Standard	(✓) Function ( ) False

[redacted] /15 Nov 25.

SYSTEM	TASK		Specification	Record/Reading
	Check relation of boom radius and boom angle (lowest, middle, highest) with refrence to load chart. Recharge fluid W-15 to load indicator, if required.		API RP 2D	(✓) YES ( ) NO
	Functional test of emergency lowering system (See procedure in Emergency Load Lowering Box). Note: Keep for 1 Yr PM to sustain crane mechanic competency. Caution: Function test must be performed on top deck with max 2-foot height.		Company Spec/Standard	(✓) YES ( ) NO ( ) N/A
	Visually check emergency load lowering kit. Ensure EMERGENCY LOWERING PROCEDURE and MATERIAL LIST are in the box. - Ensure ALL items shown on the list are in the box and in good condition - SECURE THE BOX WITH A TIE WRAP.		Company Spec/Standard	(✓) YES ( ) NO ( ) N/A
Slew Mechanism	Visually check for damage and excessive wear on gear teeth		OEM Manual	(✓) YES ( ) NO
	Visually check slew gear box in the area of oil seal for any leaks		API RP 2D	(✓) YES ( ) NO
	RECORD SLEW GEAR BOX INFORMATION :	Manufacturer:	OEM Manual	ESK
		Model:	OEM Manual	250A-D104 5/2
		Serial Number:	OEM Manual	
	CHECK and RE-TORQUE swing drive gearbox mounting bolts at following brands: - ESKRIDGE, Model: 250 = 150 FT-LBS		API RP 2D	(✓) Yes ( ) No
	Check swing gearbox oil level/condition, top up if required	Meropa 220	OEM Manual	(✓) YES ( ) NO
	Monitor slew gearbox oil condition by visually examine for burnt smell, metal particles, and/or other contaminants, record and change if found.		OEM Manual	(✓) CHANGE OIL ( ) NOT CHANGE OIL
	Change slew gear box oil		OEM Manual	(✓) CHANGE OIL ( ) NOT CHANGE OIL
	Grease all pivot points of slew ring (bearing)		OEM Manual	(✓) YES ( ) NO
	Grease open gears (pinion)		OEM Manual	(✓) YES ( ) NO
	Rotate crane 360 degree and check smoothness of operation		OEM Manual	(✓) YES ( ) NO
	Check swing drive static parking brake for proper operation Caution: DO NOT stop the swing of the crane with this static brake (parking brake)		OEM Manual	(✓) YES ( ) NO
	Check swing drive dynamic parking brake for proper operation		OEM Manual	(✓) YES ( ) NO
	Check swing lock mechanism condition, corrosion ,dent , loos all part,worn and wear		OEM Manual	(✓) YES ( ) NO As found condition.....OK
	Check swing lock mechanism freely lock and unlock for function. **Check and inspect for hydraulic for leaks on actuator model.**		OEM Manual	(✓) YES ( ) NO As found condition.....OK
	Check condition of slew ring bolts e.g. Bolt grade and washers. Caution: Use only hardened flat washers under head of bolt. Do not use lock washers, or regular flat washers.		Industry Standard	(✓) YES ( ) NO As found condition.....OK
	Monitor bull-ring grease sample. If found wear and tear particles, take sample and send to lab. **Wear assessment by grease sample analysis—wear may be monitored by periodic grease sample analysis as describe in this section. Grease samples should be collected every twelve months as a minimum and the results of the analysis recorded; this period should be shortened if obvious metal or contaminants are present.		API PR 2D	( ) SEND TO LAB (✓) NOT SEND TO LAB As found.....OK
	Verify crane condition and load test as separate procedure.		API 2C	(✓) YES ( ) NO Specific test load.....3000.....lbs.
	Verify crane condition and load test as separate procedure. " Record crane load test in load test form."		Company Standard	(✓) YES ( ) NO

Table 1—Static/Onboard Test Load and Radius

Static/Onboard Rated Load at a Specific Radius lb (kg)	Test Loads in Excess of Static/Onboard Rated Load at a Specific Radius
≤ 40,000 (18,144)	25 %
> 40,000 ≤ 100,000 (>18,144 ≤ 45,356)	10,000 lb (4536 kg)
> 100,000 (45,356)	10 %

Risk Level Definitions: The following 3 levels indicate the impact the noted deficiency poses to the operation or structural integrity of the equipment:

Level 1 = Incidental	Level #2 = Restricted Operation	Level #3 =Out of Service
Minor deficiency that is recommended to be promptly addressed, but poses no safety and/or environmental risk. The crane can still be operated at full duty.	Deficiency identified that has the potential to limit, de-rate or damage the crane, its surroundings and/or the environment. The duty and locked/ tagged out until the crane's duty and operation should be de-rated or service restricted.	The crane should be removed from duty and locked/ tagged out until the deficiency is rectified.

System:	Risk Level:	Component: GLASS	In Accordance with:
		Location: CABIN	Date Originated:

Description: GLASS IN FRONT CABIN MISSING

Recommended Action:

Recommended urgency timeframe for corrective action:

Completed Date:

Completed By:

System:	Risk Level:	Component: PRESSURE GAUGE	In Accordance with:
		Location: CABIN	Date Originated:

Description:
- SWING PRESSURE QTY 1 EA
- BOOM PRESSURE QTY 1 EA

Recommended Action: ORDER PART AND REPLACE NEXT PM.

Recommended urgency timeframe for corrective action:

Completed Date:

Completed By:

System:	Risk Level:	Component: MAIN LOAD CELL	In Accordance with:
		Location: ROD BOOM	Date Originated:

Description: SEAL AT MAIN LOAD CELL DAMAGE

Recommended Action: ORDER SEAL KIT.

Recommended urgency timeframe for corrective action:

Completed Date:

Completed By:

System:	Risk Level:	Component:	In Accordance with:

[redacted] / 15 Nov 25.

SYSTEM		TASK			Specification		Record/Reading
	Location:				Date Originated:		
Description:							
Recommended Action:							
Recommended urgency timeframe for corrective action:			Completed Date:			Completed By:	

System:	Risk Level:	Component:			In Accordance with:		
		Location:			Date Originated:		
Description:							
Recommended Action:							
Recommended urgency timeframe for corrective action:			Completed Date:			Completed By:	

System:	Risk Level:	Component:			In Accordance with:		
		Location:			Date Originated:		
Description:							
Recommended Action:							
Recommended urgency timeframe for corrective action:			Completed Date:			Completed By:	

Job completed by.

[redacted]

Date: 14 Nov. 2023.

THE PEDESTAL CRANE CONDITION VERIFICATION

Date : 13 Nov 25.			
Crane Owner : CTEP/ COTL Field: BENCHANAS... Platform/ Vessel: BENX			
Crane Owner 's representative : (Mech Supv./ M'Dent) [redacted]			
Qualified inspector : (Qualified Crane Mechanic)			
Inspector 's company / agency : (Third Party or Outsource to witness if applicable)			
Manufacture NOVATING. Fabrication by DSL STATES. Year of Fabrication 2014 Country USA Model / Serial 180B-80 Standard API Edition 6 EDITION. 2004.			Remark
Safe Working Load (SWL) --> OEM	14.52 Metric Tonnes		
Safe Working Load (SWL) --> Existing via MOC, if applicable	- Metric Tonnes		
Boom length, Main	80 Ft		
Boom length, Auxiliary if applicable	- Ft		
Part of line main hoist	4 Part line		
Part of line auxiliary hoist	1 Part line		
Safe Working Load at longest boom radius	80 ft	7293 Metric Tonnes/ Lbs	
Safe Working Load at shortest boom radius	13. ft	32019 Metric Tonnes/ Lbs	
The document of crane specification for Testing , Maintenance and Inspection are provided by:	OEM	MOC / Crane Engineer	
Has the crane ever been modified by MOC ? (To verify if this crane is modified with MOC --> Allow to test the crane. If this crane is modifed without MOC --> Not allow to test the crane)	YES	NO	(Employers are not allowed to modify or adjust any part of cranes or dericks or consent to other persons to do these things, that might reduce the safety of the employees who work with the cranes or derricks).
Does the rotating part have proper guard in place?	YES	NO	(Need mitigation plan)
Is the ladder and hand rail in place?	YES	NO	(Need mitigation plan)
Is the maintenance platform in place?	YES	NO	(Need mitigation plan)
Is the SWL tag labelled on crane pedestal, main block or aux ball?	YES	NO	(Need mitigation plan)
Verify if the crane major component damaged or not	YES (Need to repair or mitigate unsafe condition with MOC before testing)	NO	(Employers shall not allow employees work with damaged/ unsafe cranes or derricks)
Inspect boom end connections, for bends, dents, corroded areas, cracked welds, and signs of mechanical damage, wear, etc. **any deviation should be reported** Level 1 = Incidental : Minor deficiency that is recommended to be promptly addressed, but poses no safety and/or environmental risk. The crane can still be operated at full duty. --> Allow to test Level #2 = Restricted Operation: Deficiency identified that has the potential to limit, de-rate or damage the crane, its surroundings and/or the environment. The duty and locked/ tagged out until the crane's duty and operation should be de-rated or service restricted. --> **To be derated** Level #3 = Out of Service;The crane should be removed from duty and locked/ tagged out until the deficiency is rectified. --> Not Use	YES (To be verified)	NO	
Function Load Testing			
1. Verify Crane SWL (Existing)	30 Metric Tonnes		
2. Verify routine maximum actual load.	2.4 Metric Tonnes		
3. Select the specimen load to be more than actual routine load 1.25 times but not more than SWL. Example # 1 : Crane 's SWL is 18 Metric Tonnes. The routine maximum actual load is 2.4 Metric Tonnes. Therefore, the load testing shall be 2.4 x 1.25 = 3 Metric Tonnes. Example # 2 : Crane 's SWL is 18 Metric Tonnes. The routine maximum actual load is 16 Metric Tonnes. By calculation, the load testing is 16 x 1.25 = 20 Metric Tonnes more than SWL (18 MTon). **Therefore, the load testing shall be 18 Metric Tonnes equal to SWL.**	3.0 Metric Tonnes		
4. Use Auxiliary Winch if specimen load less than or equal 3 Metric Tonne	YES	NO	
5.Use Main Winch if specimen load more than 3 Metric Tonne	YES	NO	
6. The record of load testing : Fill in "Function Test Record" sheet attached.			

RECORDED FUNCTION TEST PROCEDURE

1. CHECK AND RECORD READING RADIUS AND BOOM INDICATIOR AT FOUR (4) VALUES INCLUDING MAXIMUM AND MINIMUM.

(ALL REDIUS MEASUREMENT ARE TO BE TEKEN FROM THE CENTERLINE OF CRANE ROTATION)

ACTUAL	INDICATED RADIUS (FT)
A) 15' (MINIMUM)	15
B) 20'	20
C) 25'	25
D) 30' (INTERMIDIATE)	30
E) 40'	40
F) 50' (INTERMIDIATE)	50
G) 60'	60
H) 75' (MAXIMUM)	75

2. CHECK AND RECORD READING ON BOOM ANGLE / DEGREES.

SPECIFICATION	INDICATED BOOM ANGLE (DEGREES)
1). MAXIMUM. .....80..... DEGREES	80
2). INTERMEDIATE. .....60..... DEGREES	60
3). INTERMEDIATE. .....40..... DEGREES	40
4). MINIMUM. .....0..... DEGREES	0

3. READING ON LOAD INDICATOR WITHOUT SLINGS OR LOAD / LBS. (LOAD BLOCK + WIRE ROPE)

ACTUAL	INDICATOR READ FREE LOAD, (LBS)
1). MAXIMUM RADIUS 900 LBS.	850
2). MINIMUM RADIUS 400 LBS,	750

4. CHECK AND RECORD ENGINE HIGH IDLE SPEED / RPM.

SPECIFICATION	INDICATED OF FUNCTIONAL (RPM)
1). IDLE SPEED 850 RPM	850
2). LOW SPEED - RPM	-
3). HIGH SPEED 2200 RPM	2200

5. FUNTIONALLY TEST THE FOLLOWING.

ACTUAL	INDICATED OF FUNCTIONAL (TESTED)
A) MAIN HOIST ANTI -TWO BLOCK.	Function
B) AUXILIALY HOIST ANTI -TWO BLOCK.	Function
C) HIGH BOOM ANGLE KICK OUT.	N/A
D) LOW BOOM ANGLE KICK OUT.	N/A
E) PRIME MOVER SHUTDOWN.	Function.
F) EMERGENCY SHUTDOWN.	Function.
G) ROTATE CRANE 360 LEFT.	Smooth
H) ROTATE CRANE 360 RIGHT.	Smooth.

6. RECORD HYDRAULIC RELIEF VALVE PRESSURE SETTING ON FOLLOWING HYDRAULIC FUNCTION:

SPECIFICATION	INDICATED PRESSURE (PSI)
A) MAIN HOIST 2985..... PSI.	2985
B) AUXILIALY HOIST 2800..... PSI.	2800
C) BOOM HOIST 3000..... PSI.	3000

TEST CONDUCTED BY: [redacted] POSITION : CR-MECH.

CRANE OPERATOR : POSITION : CR-MECH.

COMMENTS : DATE : 14 NOV 25.

.....

.....

.....

.....

Inspection Report

Work Order Details

Inspection Type
Ultrasonic Flare Meter (THA)

Work Order #
1258597

Description
1Y ULTRASONIC FLARE METER-BEPP

Scheduled Date
08/02/2025

Status
50 - Ready to Schedule

Local Code 11
UFM

Local Code 13

Service Type
ID180

Work Center
BEIEROV

Branch Plant
3800BLQNTA

Fields
BENCHAMAS

Platform Tag
BENCHAMAS

ECA Ranking
3

PM Status
50

PM Description
1Y ULTRASONIC FLARE METER-BEPP

SD Category

Plan Date
7/27/2025 12:00:00 AM

Equipment Details

Equipment #
BEPP-FLARE-GAS-METER

Description
1Y ULTRASONIC FLARE METER-BEPP

Parent #
BEPP-VX

Area
BENCHAMAS

Sub Area
BEPP-VX

Equipment Class
System

Assignment and Status

Status
Completed

Inspected By
[redacted]

License/Certification

Inspected On
8/4/2025 10:43:37 PM

Approved by
[redacted]

Approved on
8/6/2025 10:56:26 AM

Completed by
[redacted]

Completed on
8/4/2025 10:43:37 PM

Inspection Summary

Completed by: Kongsak W/Warakorn A Date:1 Aug,2025

Reviewer Summary

The equipment is accurate and in normal condition.

Equipment Details

Field Name	Original Value	New Value

Inspection Items

General

Item	Response	Completion
INSPECTION INTERVAL	1Y	WPHH@chevron.com 8/4/2025 2:23:57 PM
PLATFORM	Benchasmas	WPHH@chevron.com 8/4/2025 2:24:00 PM

MFGR, INDUSTRY REFERENCES AND ENGINEERING RECOMMENDATION

Item	Response	Completion
- FLOW MEASUREMENT MANUAL Rev.2 - P&ID NO. D-COT-BEN-10-064	Yes	WPHH@chevron.com 8/4/2025 2:24:08 PM

PREPARATION TO PERFORM PM TASK

Item	Response	Completion
Coordinate with fe construction to prepare scaffolding as required.	Yes	WPHH@chevron.com 8/4/2025 2:24:11 PM
Coordinate with operator to make equipment available for PM.	Yes	WPHH@chevron.com 8/4/2025 2:24:13 PM
Certified pressure calibrators or other certified calibration equipment.	Yes	WPHH@chevron.com 8/4/2025 2:24:13 PM
Certified resistance decade box or rtd or calibrator and thermometer.	Yes	WPHH@chevron.com 8/4/2025 2:24:15 PM

VISUAL INSPECTION

Item	Response	Completion
Inspect all accessible instrument systems for damages, leaks, loose or broken connections.	Yes	WPHH@chevron.com 8/4/2025 2:24:17 PM

PERFORM CALIBRATION CHECK ON TRANSMITTERS - Verify the "AS FOUND"pressure PIT-P1610 and record the readings. (CRITERIA : ACCURACY WITH IN 0.1% OF SPAN)

Item	Response	Completion
Flush out PIT-P1610 impulse lines.	Yes	WPHH@chevron.com 8/4/2025 2:24:21 PM
Desired Input 14.70 PSI and Desired output 9.8% AS FOUND	INC As Found: 14.7 PSI As Left: 14.7 PSI DEC As Found: 14.7 PSI As Left: 14.7 PSI	WPHH@chevron.com 8/4/2025 2:25:46 PM
Desired Input 37.50 PSI and Desired output 25% AS FOUND	INC As Found: 37.5 PSI As Left: 37.5 PSI DEC As Found: 37.5 PSI As Left: 37.5 PSI	WPHH@chevron.com 8/4/2025 2:26:43 PM
Desired Input 75.00 PSI and Desired output 50% AS FOUND	INC As Found: 75 PSI As Left: 75 PSI DEC As Found: 75 PSI As Left: 75 PSI	
Desired Input 112.50 PSI and Desired output 75% AS FOUND	INC As Found: 112.5 PSI As Left: 112.5 PSI DEC As Found: 112.5 PSI As Left: 112.5 PSI	
Desired Input 150.00 PSI and Desired output 100% AS FOUND	INC As Found: 150 PSI As Left: 150 PSI DEC As Found: 150 PSI As Left: 147 PSI	

PERFORM CALIBRATION CHECK ON TRANSMITTERS - Verify the "AS FOUND"pressure PIT-P1620 and record the readings. (CRITERIA : ACCURACY WITH IN 0.1% OF SPAN)

Item	Response	Completion
Flush out PIT-P1620 impulse lines.	Yes	
Desired Input 14.70 PSI and Desired output 9.8% AS LEFT	INC As Found: 14.7 PSI As Left: 14.7 PSI DEC As Found: 14.7 PSI As Left: 14.7 PSI	
Desired Input 37.50 PSI and Desired output 25% AS LEFT	INC As Found: 37.5 As Left: 37.5 DEC As Found: 37.5 As Left: 37.5	
Desired Input 75.00 PSI and Desired output 50% AS LEFT	INC As Found: 75 PSI As Left: 75 PSI DEC As Found: 75 PSI As Left: 75 PSI	
Desired Input 112.50 PSI and Desired output 75% AS LEFT	INC As Found: 112.5 PSI As Left: 112.5 PSI DEC As Found: 112.5 PSI As Left: 112.5 PSI	
Desired Input 150.00 PSI and Desired output 100% AS LEFT	INC As Found: 150 PSI As Left: 150 PSI DEC As Found: 150 PSI As Left: 150 PSI	

PERFORM CALIBRATION CHECK ON TRANSMITTERS - If Pressure transmitter fail to meet the criteria

Item	Response	Completion
If the "AS FOUND" readings of any pressure transmitter fail to meet the criteria, make the adjustment/calibration and reperform verify until the results of that pressure transmitter meet the criteria. then the latest readings shall be recorded as “AS LEFT”	Yes	

PERFORM CALIBRATION CHECK ON TRANSMITTERS - Verify the "AS FOUND"temperature TIT-P1610 and record the readings. (CRITERIA : ACCURACY WITH IN 0.64 OF SPAN)

Item	Response	Completion
Desired output 0% 0.00 DEG F AS FOUND	Simulation (Ohms): 93.033 As Found (DEG F): 0.5 As Left (DEG F): 0.0	
Desired output 25% 50.00 DEG F AS FOUND	Simulation (Ohms): 103.903 As Found (DEG F): 50.05 As Left (DEG F): 0	
Desired output 50% 100.00 DEG F AS FOUND	Simulation (Ohms): 114.682 As Found (DEG F): 100.50 As Left (DEG F): 0	
Desired output 75% 150.00 DEG F AS FOUND	Simulation (Ohms): 125.373 As Found (DEG F): 150.50 As Left (DEG F): 0	
Desired output 100% 200.00 DEG F AS FOUND	Simulation (Ohms): 135.974 As Found (DEG F): 200.20 As Left (DEG F): 0	

PERFORM CALIBRATION CHECK ON TRANSMITTERS - Verify the "AS FOUND"temperature TIT-P1620 and record the readings. (CRITERIA : ACCURACY WITH IN 0.64 OF SPAN)

Item	Response	Completion
Desired output 0% 0.00 DEG F AS FOUND	Simulation (Ohms): 93.033 As Found (DEG F): 0.40 As Left (DEG F): 0	
Desired output 25% 50.00 DEG F AS FOUND	Simulation (Ohms): 103.303 As Found (DEG F): 50.0 As Left (DEG F): 0	
Desired output 50% 100.00 DEG F AS FOUND	Simulation (Ohms): 114.682 As Found (DEG F): 100.50 As Left (DEG F): 100.50	
Desired output 75% 150.00 DEG F AS FOUND	Simulation (Ohms): 125.373 As Found (DEG F): 150.50 As Left (DEG F): 150.0	
Desired output 100% 200.00 DEG F AS FOUND	Simulation (Ohms): 135.974 As Found (DEG F): 200.20 As Left (DEG F): 200	

PERFORM CALIBRATION CHECK ON TRANSMITTERS - If Temperature transmitter fail to meet the criteria

Item	Response	Completion
If the "AS FOUND" readings fail to meet the criteria, make the adjustment/calibration and reperform verify until the results meet the criteria. then the latest readings shall be recorded as “AS LEFT”	Yes	

PERFORM CALIBRATION CHECK ON TRANSMITTERS - Verify temperature spot reading against a certified thermometer.

Item	Response	Completion
TIT-P1610	Spot reading: 92.88 DEG F Certified thermometer: 94.00 DEG F	
TIT-P1620	Spot reading: 93.00 DEG F Certified thermometer: 93.50 DEG F	

ZERO VERIFICATION AND TRANSDUCER CLEANING

Item	Response	Completion
Retract the sensors and close the isolation valves.	Yes	
Put both transducers in a close box or PVC pipe with the distance between tranducer's head equals to path length.	Yes	
Record the zero reading, Reset zero if required for FE-P1610A NOTE : ± 0.03 m/s = NORMAL >0.03 <1 m/s = SET ZERO CUT OFF > 1m/s = CONSULT WITH VENDOR / M&M (ISSUE WO)	As Found: 0.02 m/s As Left: 0.02 m/s	

Record the zero reading, Reset zero if required for FE-P1610B NOTE : ± 0.03 m/s = NORMAL >0.03 <1 m/s = SET ZERO CUT OFF > 1m/s = CONSULT WITH VENDOR / M&M (ISSUE WO)	As Found: 0.01 m/s As Left: 0.01 m/s
Record the zero reading, Reset zero if required for FE-P1620A NOTE : ± 0.03 m/s = NORMAL >0.03 <1 m/s = SET ZERO CUT OFF > 1m/s = CONSULT WITH VENDOR / M&M (ISSUE WO)	As Found: 0.01 m/s As Left: 0.01 m/s
Record the zero reading, Reset zero if required for FE-P1620B NOTE : ± 0.03 m/s = NORMAL >0.03 <1 m/s = SET ZERO CUT OFF > 1m/s = CONSULT WITH VENDOR / M&M (ISSUE WO)	As Found: 0.01 m/s As Left: 0.01 m/s
Install the transducers back and open the isolation valves.	Yes

FINAL INSPECTION

Item	Response	Completion
Return the system to service.	Yes	
Retrieve diagnostic data and compare to standard value to ensure that all data within the range. record value in the table.	Yes	
If any value is out of range, both sensors are required to be cleaned (see transducer removal procedure) NOTE : mark sensors exact position before removing and installing back to ensure its proper position after cleaning. if any sensor is not exactly installed to its position, the system may not measure correctly	Yes	
Check system for leaks.	Yes	

CHECK DIAGNOSTIC OF PARAMETIC GF868 AT CONTROL ROOMS DETAILS

Item	Response	Completion
FQI-P1610 HP FLARE METER DIAGNOSTIC DATA (BASELINE CONDITION).	SS up : Display the signal strength for the upstream transducer. (50-75) CH#1 AS FOUND: 61.500 SS do : Display the signal strength for the downstream transducer. (50-75) CH#1 AS FOUND: 61.900 Q up : Display the signal quality for the upstream transducer. (≥1200) CH#1 AS FOUND: 1266.000 Q down : Display the signal quality for the downstream transducer. (≥1200) CH#1 AS FOUND: 1339.000 AMP up : Display the value for the amplitude discriminator of the upstream transducer. (24 ± 5) CH#1 AS FOUND: 23.000 AMP down : Display the value for the amplitude discriminator of the downstream transducer. (24 ± 5) CH#1 AS FOUND: 23.000 P# up : Display signal peaks for the upstream transducer. (100-2300) CH#1 AS FOUND: 269.000 P# down : Display signal peaks for the downstream transducer. (100-2300) CH#1 AS FOUND: 270.000 Sndsp : Display sound speed of media in pipe. (N/A) CH#1 AS FOUND: 1130.244	
FQI-P1620 HP FLARE METER DIAGNOSTIC DATA (BASELINE CONDITION).	SS up : Display the signal strength for the upstream transducer. (50-75) CH#2 AS FOUND: 60.800 SS do : Display the signal strength for the downstream transducer. (50-75) CH#2 AS FOUND: 60.800 Q up : Display the signal quality for the upstream transducer. (≥1200) CH#2 AS FOUND: 1403.000 Q down : Display the signal quality for the downstream transducer. (≥1200) CH#2 AS FOUND: 1206.000 AMP up : Display the value for the amplitude discriminator of the upstream transducer. (24 ± 5) CH#2 AS FOUND: 25.000 AMP down : Display the value for the amplitude discriminator of the downstream transducer. (24 ± 5) CH#2 AS FOUND: 23.000 P# up : Display signal peaks for the upstream transducer. (100-2300) CH#2 AS FOUND: 306.000 P# down : Display signal peaks for the downstream transducer. (100-2300) CH#2 AS FOUND: 307.000 Sndsp : Display sound speed of media in pipe. (N/A) CH#2 AS FOUND: 922.378	

PM TASK REPORT

Item	Response	Completion
Scan this job card and attach to work order.	Yes	
Close PM work order and record any corrective actions in CMMS.	Yes	

©2025, rev. 3.1.0.0

Inspection Report

Work Order Details

Inspection Type
Ultrasonic Flare Meter (THA)

Work Order #
1246009

Description
6M ULTRASONIC FLARE METER-BEPP

Scheduled Date
01/29/2025

Status
50 - Ready to Schedule

Local Code 11
UFM

Local Code 13

Service Type
ID180

Work Center
BEIEROV

Branch Plant
3800BLQNTA

Fields
BENCHAMAS

Platform Tag
BENCHAMAS

ECA Ranking
2

PM Status
50

PM Description
6M ULTRASONIC FLARE METER-BEPP

SD Category

Plan Date
12/4/2024 12:00:00 AM

Equipment Details

Equipment #
BEPP-FLARE-GAS-METER

Description
6M ULTRASONIC FLARE METER-BEPP

Parent #
BEPP-VX

Area
BENCHAMAS

Sub Area
BEPP-VX

Equipment Class
System

Assignment and Status

Completed by
[redacted]

Completed on
2/5/2025 9:04:04 AM

Status
Completed

Approved by
[redacted]

Approved on

Thursday, January 09, 2025 13:30:31

Inspection Summary

Nuttapong C./ Suphachai P.

5 Feb 2025

Reviewer Summary

The equipment is accurate and in normal condition.

Equipment Details

Field Name	Original Value	New Value

Inspection Items

General

Item	Response	Completion
INSPECTION INTERVAL	6M	
PLATFORM	Benchasmas	

MFGR, INDUSTRY REFERENCES AND ENGINEERING RECOMMENDATION

Item	Response	Completion
- FLOW MEASUREMENT MANUAL Rev.2 - P&ID NO. D-COT-BEN-10-064	Yes	

PREPARATION TO PERFORM PM TASK

Item	Response	Completion
Coordinate with fe construction to prepare scaffolding as required.	Yes	
Coordinate with operator to make equipment available for PM.	Yes	
Certified pressure calibrators or other certified calibration equipment.	Not Applicable	
Certified resistance decade box or rtd or calibrator and thermometer.	Not Applicable	

VISUAL INSPECTION

Item	Response	Completion
Inspect all accessible instrument systems for damages, leaks, loose or broken connections.	Yes	

PERFORM CALIBRATION CHECK ON TRANSMITTERS - Verify the "AS FOUND"pressure PIT-P1610 and record the readings. (CRITERIA : ACCURACY WITH IN 0.1% OF SPAN)

Item	Response	Completion
Flush out PIT-P1610 impulse lines.	Yes	
Desired Input 14.70 PSI and Desired output 9.8% AS FOUND	INC As Found: 14.7 PSI As Left: 14.7 PSI DEC As Found: 14.71 PSI As Left: 14.71 PSI	
Desired Input 37.50 PSI and Desired output 25% AS FOUND	INC As Found: 37.5 PSI As Left: 37.5 PSI DEC As Found: 37.51 PSI As Left: 37.51 PSI	
Desired Input 75.00 PSI and Desired output 50% AS FOUND	INC As Found: 75.01 PSI As Left: 75.01 PSI DEC As Found: 75.02 PSI As Left: 75.02 PSI	
Desired Input 112.50 PSI and Desired output 75% AS FOUND	INC As Found: 112.51 PSI As Left: 112.51 PSI DEC As Found: 112.52 PSI As Left: 112.52 PSI	
Desired Input 150.00 PSI and Desired output 100% AS FOUND	INC As Found: 150.02 PSI As Left: 150.02 PSI DEC As Found: 150.02 PSI As Left: 150.02 PSI	

Comments/Recommendations:
No re-calibrate due to accuracy 0.1% of span

PERFORM CALIBRATION CHECK ON TRANSMITTERS - Verify the "AS FOUND"pressure PIT-P1620 and record the readings. (CRITERIA : ACCURACY WITH IN 0.1% OF SPAN)

Item	Response	Completion
Flush out PIT-P1620 impulse lines.	Yes	
Desired Input 14.70 PSI and Desired output 9.8% AS LEFT	INC As Found: 14.7 PSI As Left: 14.7 PSI DEC As Found: 14.7 PSI As Left: 14.7 PSI	
Desired Input 37.50 PSI and Desired output 25% AS LEFT	INC As Found: 35.7 As Left: 35.7 DEC As Found: 35.7 As Left: 35.7	
Desired Input 75.00 PSI and Desired output 50% AS LEFT	INC As Found: 75 PSI As Left: 75 PSI DEC As Found: 75 PSI As Left: 75 PSI	
Desired Input 112.50 PSI and Desired output 75% AS LEFT	INC As Found: 112.5 PSI As Left: 112.5 PSI DEC As Found: 112.5 PSI As Left: 112.5 PSI	
Desired Input 150.00 PSI and Desired output 100% AS LEFT	INC As Found: 150 PSI As Left: 150 PSI DEC As Found: 150 PSI	

	As Left: 150 PSI

Comments/Recommendations:
No re-calibrate due to accuracy 0.1% of span

PERFORM CALIBRATION CHECK ON TRANSMITTERS - If Pressure transmitter fail to meet the criteria

Item	Response	Completion
If the "AS FOUND" readings of any pressure transmitter fail to meet the criteria, make the adjustment/calibration and reperform verify until the results of that pressure transmitter meet the criteria. then the latest readings shall be recorded as “AS LEFT”	Yes	

PERFORM CALIBRATION CHECK ON TRANSMITTERS - Verify the "AS FOUND"temperature TIT-P1610 and record the readings. (CRITERIA : ACCURACY WITH IN 0.64 OF SPAN)

Item	Response	Completion
Desired output 0% 0.00 DEG F AS FOUND	Simulation (Ohms): 93.033 As Found (DEG F): 0.34 As Left (DEG F): 0.34	
Desired output 25% 50.00 DEG F AS FOUND	Simulation (Ohms): 103.903 As Found (DEG F): 50.32 As Left (DEG F): 50.32	
Desired output 50% 100.00 DEG F AS FOUND	Simulation (Ohms): 114.682 As Found (DEG F): 100.35 As Left (DEG F): 100.35	
Desired output 75% 150.00 DEG F AS FOUND	Simulation (Ohms): 125.373 As Found (DEG F): 150.35 As Left (DEG F): 150.35	
Desired output 100% 200.00 DEG F AS FOUND	Simulation (Ohms): 135.947 As Found (DEG F): 200.35 As Left (DEG F): 200.35	

Comments/Recommendations:
No re-calibrate due to accuracy 0.64 of span

PERFORM CALIBRATION CHECK ON TRANSMITTERS - Verify the "AS FOUND"temperature TIT-P1620 and record the readings. (CRITERIA : ACCURACY WITH IN 0.64 OF SPAN)

Item	Response	Completion
Desired output 0% 0.00 DEG F AS FOUND	Simulation (Ohms): 93.033 As Found (DEG F): 0.22 As Left (DEG F): 0.22	
Desired output 25% 50.00 DEG F AS FOUND	Simulation (Ohms): 103.903 As Found (DEG F): 50.23 As Left (DEG F): 50.23	
Desired output 50% 100.00 DEG F AS FOUND	Simulation (Ohms): 114.682 As Found (DEG F): 100.21 As Left (DEG F): 100.21	
Desired output 75% 150.00 DEG F AS FOUND	Simulation (Ohms): 125.373 As Found (DEG F): 150.22 As Left (DEG F): 150.22	
Desired output 100% 200.00 DEG F AS FOUND	Simulation (Ohms): 135.947 As Found (DEG F): 200.21 As Left (DEG F): 200.21	

Comments/Recommendations:
No re-calibrate due to results meet the criteria

PERFORM CALIBRATION CHECK ON TRANSMITTERS - If Temperature transmitter fail to meet the criteria

Item	Response	Completion
If the "AS FOUND" readings fail to meet the criteria, make the adjustment/calibration and reperform verify until the results meet the criteria. then the latest readings shall be recorded as “AS LEFT”	No	

Comments/Recommendations:
No re-calibrate due to results meet the criteria

PERFORM CALIBRATION CHECK ON TRANSMITTERS - Verify temperature spot reading against a certified thermometer.

Item	Response	Completion
TIT-P1610	Spot reading: 93.52 DEG F Certified thermometer: 93.61 DEG F	
TIT-P1620	Spot reading: 94.04 DEG F Certified thermometer: 94.13 DEG F	

ZERO VERIFICATION AND TRANSDUCER CLEANING

Item	Response	Completion
Retract the sensors and close the isolation valves. **Comments/Recommendations:** Task 1Y PM	Not Applicable	
Put both transducers in a close box or PVC pipe with the distance between tranducer's head equals to path length. **Comments/Recommendations:** Task 1Y PM	Not Applicable	
Record the zero reading, Reset zero if required for FE-P1610A NOTE : ± 0.03 m/s = NORMAL >0.03 <1 m/s = SET ZERO CUT OFF > 1m/s = CONSULT WITH VENDOR / M&M (ISSUE WO) **Comments/Recommendations:** Task 1Y PM	As Found: 0 m/s As Left: 0 m/s	
Record the zero reading, Reset zero if required for FE-P1610B NOTE : ± 0.03 m/s = NORMAL >0.03 <1 m/s = SET ZERO CUT OFF > 1m/s = CONSULT WITH VENDOR / M&M (ISSUE WO) **Comments/Recommendations:** Task 1Y PM	As Found: 0 m/s As Left: 0 m/s	
Record the zero reading, Reset zero if required for FE-P1620A NOTE : ± 0.03 m/s = NORMAL >0.03 <1 m/s = SET ZERO CUT OFF > 1m/s = CONSULT WITH VENDOR / M&M (ISSUE WO) **Comments/Recommendations:** Task 1Y PM	As Found: 0 m/s As Left: 0 m/s	
Record the zero reading, Reset zero if required for FE-P1620B NOTE : ± 0.03 m/s = NORMAL >0.03 <1 m/s = SET ZERO CUT OFF > 1m/s = CONSULT WITH VENDOR / M&M (ISSUE WO) **Comments/Recommendations:** Task 1Y PM	As Found: 0 m/s As Left: 0 m/s	
Install the transducers back and open the isolation valves. **Comments/Recommendations:** Task 1Y PM	Not Applicable	

FINAL INSPECTION

Item	Response	Completion
Return the system to service.	Yes	
Retrieve diagnostic data and compare to standard value to ensure that all data within the range. record value in the table.	Yes	
If any value is out of range, both sensors are required to be cleaned (see transducer removal procedure) NOTE : mark sensors exact position before removing and installing back to ensure its proper position after cleaning. if any sensor is not exactly installed to its position, the system may not measure correctly	Not Applicable	
Check system for leaks.	Yes	

CHECK DIAGNOSTIC OF PARAMETIC GF868 AT CONTROL ROOMS DETAILS

Item	Response	Completion
FQI-P1610 HP FLARE METER DIAGNOSTIC DATA (BASELINE CONDITION).	SS up : Display the signal strength for the upstream transducer. (50-75) CH#1 AS FOUND: 61.0 SS do : Display the signal strength for the downstream transducer. (50-75) CH#1 AS FOUND: 61.4 Q up : Display the signal quality for the upstream transducer. (≥1200) CH#1 AS FOUND: 1604 Q down : Display the signal quality for the downstream transducer. (≥1200) CH#1 AS FOUND: 1528 AMP up : Display the value for the amplitude discriminator of the upstream transducer. (24 ± 5) CH#1 AS FOUND: 23 AMP down : Display the value for the amplitude discriminator of the downstream transducer. (24 ± 5) CH#1 AS FOUND: 24 P# up : Display signal peaks for the upstream transducer. (100-2300) CH#1 AS FOUND: 269 P# down : Display signal peaks for the downstream transducer. (100-2300) CH#1 AS FOUND: 269 Sndsp : Display sound speed of media in pipe. (N/A) CH#1 AS FOUND: N/A	
FQI-P1620 HP FLARE METER DIAGNOSTIC DATA (BASELINE CONDITION).	SS up : Display the signal strength for the upstream transducer. (50-75) CH#2 AS FOUND: 60.8 SS do : Display the signal strength for the downstream transducer. (50-75) CH#2 AS FOUND: 60.9 Q up : Display the signal quality for the upstream transducer. (≥1200) CH#2 AS FOUND: 1457 Q down : Display the signal quality for the downstream transducer. (≥1200) CH#2 AS FOUND: 1209 AMP up : Display the value for the amplitude discriminator of the upstream transducer. (24 ± 5) CH#2 AS	

FOUND: 26
AMP down : Display the value for the amplitude discriminator of the downstream transducer. (24 ± 5) CH#2 AS FOUND: 26
P# up : Display signal peaks for the upstream transducer. (100-2300) CH#2 AS FOUND: 314
P# down : Display signal peaks for the downstream transducer. (100-2300) CH#2 AS FOUND: 313
Sndsp : Display sound speed of media in pipe. (N/A) CH#2 AS FOUND: N/A

PM TASK REPORT

Item	Response	Completion
Scan this job card and attach to work order.	Yes	
Close PM work order and record any corrective actions in CMMS.	Yes	

©2025, rev. 3.1.0.0

Inspection Report

Work Order Details

Inspection Type
Gas Generator Centaur - 40 IE

Work Order #
1237243-BEIEROV

Description
8K SOLAR TURBINE GEN1-BLQ-ITPM

Scheduled Date
10/18/2024

Status
85 - Closed

Local Code 11
C40

Local Code 13
ITP

Service Type
MH4400

Work Center
BEIEROV

Branch Plant
3800BLQNTA

Fields
BENCHAMAS

Platform Tag
BENCHAMAS

ECA Ranking
2

PM Status
99

PM Description
8K SOLAR TURBINE GEN1-BLQ-ITPM

SD Category
UO

Plan Date
8/28/2024 12:00:00 AM

Equipment Details

Equipment #
BELQ-ZAN-Q7801A

Description
5Y INSPECTION CO2 GEN

Area
BENCHAMAS

Equipment Class
Electric Generator

Assignment and Status

Completed by
[redacted]

Completed on
9/1/2024 1:19:19 PM

Status
Completed

Approved by
[redacted]

Approved on
Thursday, January 09, 2025 13:30:31

Inspection Summary

Completed By Teerapong D./Nakorn S./Wisitsak P./Kongsak W.

Date 30 Aug 2024

Reviewer Summary

Equipment Details

Field Name	Original Value	New Value

Inspection Items

General

Item	Response	Completion
INTERVAL	8K	KongsakW@chevron.com 9/1/2024 6:57:38 PM

PRE-REQUISITE TASKS

Item	Response	Completion
OBTAIN WORK PERMIT, REVIEW HA/JSA ANS CARRY OUT TOOLBOX MEETING.	Yes	KongsakW@chevron.com 9/1/2024 6:57:48 PM
REVIEW/ SING UP START WORK CHECK PRIOR PERFORMING TASKS.	Yes	KongsakW@chevron.com 9/1/2024 6:57:49 PM
COORDINATE WITH PRODUCTION & MECH TO PERFORM PM GAS GENERATOR.	Yes	KongsakW@chevron.com 9/1/2024 6:57:50 PM

SHUTDOWN TASK - VISUAL INSPECTION

Item	Response	Completion
CHECK CONNECTIONS CONDITION AND RE-TIGHTEN AS NECESSARY ON MARCHALING PANEL WHICH ARE INTERFACE WITH PACKAGE TO PROCESS CONTROL	Yes	KongsakW@chevron.com 9/1/2024 6:58:08 PM
VISUALLY INSPECT ALL ACCESSIBLE ELECTRICAL SYSTEMS FOR ANY LOOSE OR BROKEN CONNECTIONS, DEFECTIVE CIRCUITRY AND NON STANDARD CONDITIONS	Yes	KongsakW@chevron.com 9/1/2024 6:57:59 PM

SHUTDOWN TASK - CHECK AND CALIBRATE PRESSURE SWITCHES

Item	Response	Completion
PS3150 SWITCH, MAIN LUBE OIL PUMP #1 PERMISSIVE/TEST SET 6/4 PSI INC/DEC	Pass/Fail: **Pass**	KongsakW@chevron.com 9/1/2024 6:58:21 PM
PS3170 SWITCH, BACKUP LUBE PUMP LOW PRESSURE TEST SET 8/6 PSI INC/DEC	Pass/Fail: **Pass**	KongsakW@chevron.com 9/1/2024 6:59:15 PM
PS3200 SWITCH, BACKUP LUBE PUMP ACTIVATION SET 6/4 PSI INC/DEC	Pass/Fail: **Pass**	KongsakW@chevron.com 9/1/2024 6:59:25 PM
PS3420 SWITCH, GENERATOR BEARING OIL PRESSURE LOW SHUTDOWN SET 6/4 PSI INC/DEC	Pass/Fail: **Pass**	KongsakW@chevron.com 9/1/2024 6:59:34 PM
PS2106 SWITCH, LOW GAS FUEL PRESSURE ALARM (TRANSFER TO LIQUID) SET 175/150 PSI INC/DEC	Pass/Fail: **Pass**	KongsakW@chevron.com 9/1/2024 6:59:56 PM
PS2121 SWITCH, GAS FUEL VENT BACK-PRESSURE HIGH ALARM SET 8/6 PSI INC/DEC	Pass/Fail: **Pass**	KongsakW@chevron.com 9/1/2024 7:00:11 PM
PS2220 SWITCH, LIQUID FUEL PUMP OUTLET PRESSURE HIGH SHUTDOWN SET 960/840 PSI INC/DEC	Pass/Fail: **Pass**	KongsakW@chevron.com 9/1/2024 7:43:06 PM
Comments/Recommendations: Found Pressure Switch can not working done by replaced new Pressure Switch with same Solar Turbine Parts. W/O#1241490		
PDS1500 SWITCH, FLAMEOUT PROTECTION DELTA-P HIGH SHUTDOWN SET 2 PSID	Pass/Fail: **Pass**	KongsakW@chevron.com 9/1/2024 7:06:01 PM

SHUTDOWN TASK - CHECK AND CALIBRATE LEVEL SWITCH

Item	Response	Completion
LS3101 SWITCH, LUBE OIL TANK LOW LEVEL SHUTDOWN SET 8.25 INCH FROM TOP TANK	Pass/Fail: **Pass**	KongsakW@chevron.com 9/1/2024 7:06:58 PM

SHUTDOWN TASK - CHECK AND CALIBRATE PRESSURE TRANSMITTER

Item	Response	Completion
PDT3100 Lube Oil Tank Vent Range 0 -15 inH2O	ZERO: 0 INH2O SPAN: 15 INH2O	KongsakW@chevron.com 9/1/2024 7:07:57 PM
PDT3240 LUBE OIL FILTER DELTA-P Range 0 - 100 PSID	ZERO: 0 PSID SPAN: 100 PSID	KongsakW@chevron.com 9/1/2024 7:08:15 PM
PT3200 LUBE OIL HEADER PRESSURE Range 0 - 150 PSI	ZERO: 0 PSI SPAN: 150 PSI	KongsakW@chevron.com 9/1/2024 7:08:46 PM
PT2113 MONITOR GAS FUEL PRESSURE Range 0 – 600 PSI	ZERO: 0 PSI SPAN: 600 PSI	KongsakW@chevron.com 9/1/2024 7:09:25 PM
PDT2113 GAS FUEL SUPPLY FLOW Range 0 – 100 inH2O	ZERO: 0 INH2O SPAN: 100 INH2O	KongsakW@chevron.com 9/1/2024 7:09:41 PM
PT2120 GAS FUEL PRESSURE Range 0 – 700 PSI	ZERO: 0 PSI SPAN: 700 PSI	KongsakW@chevron.com 9/1/2024 7:10:01 PM
PT2121 GAS FUEL VALVE PRESSURE CHECK Range 0 – 700 PSI	ZERO: 0 PSI SPAN: 700 PSI	KongsakW@chevron.com 9/1/2024 7:10:18 PM
PDT2131 GAS FUEL CONTROL DELTA-P Range 0 – 100 PSID	ZERO: 0 PSID SPAN: 100 PSID	KongsakW@chevron.com 9/1/2024 7:10:34 PM
PT2640 GAS FUEL PURGE PRESSURE Range 0 – 700 PSI	ZERO: 0 PSI SPAN: 700 PSI	KongsakW@chevron.com 9/1/2024 7:10:51 PM
PDT2201 LIQUID FUEL FILTER DIFFERENTIAL PRESSURE Range 0 – 100 PSID	ZERO: 0 PSID SPAN: 100 PSID	KongsakW@chevron.com 9/1/2024 7:11:06 PM
PT2220 LIQUID FUEL PRESSURE Range : 0 – 150 PSI	ZERO: 0 PSI SPAN: 150 PSI	KongsakW@chevron.com 9/1/2024 7:11:28 PM
PT2225 PUMP CHECK FUEL TRANSFER Range : 0 – 1500 PSI	ZERO: 0 PSI SPAN: 1500 PSI	KongsakW@chevron.com 9/1/2024 7:11:41 PM
PT6400 MONITOR AIR SUPPLY	ZERO: 0 PSI SPAN: 700 PSI	KongsakW@chevron.com 9/1/2024 7:12:01 PM
PDT1110 TURBINE AIR INLET DELTA-P	ZERO: 0 INH2O	KongsakW@chevron.com

Range 0 – 15 INH2O	SPAN: 15 INH2O	9/1/2024 7:12:27 PM
PT1120 MONITOR PCD Range 0 – 700 PSI	ZERO: 0 PSI SPAN: 700 PSI	KongsakW@chevron.com 9/1/2024 7:12:49 PM
PT1121 MONITOR PCD Range : 0 – 700 PSI	ZERO: 0 PSI SPAN: 700 PSI	KongsakW@chevron.com 9/1/2024 7:13:05 PM
PDT6310 AIR INLET FILTER DELTA-P Range 0 – 10 INH2O	ZERO: 0 INH2O SPAN: 10 INH2O	KongsakW@chevron.com 9/1/2024 7:13:27 PM
PDT6180 ENCLOSURE (DRIVER) PRESSURE DELTA-P Range : 0 – 3 INH2O	ZERO: 0 INH2O SPAN: 3 INH2O	KongsakW@chevron.com 9/1/2024 7:13:39 PM

SHUTDOWN TASK - CHECK AND CALIBRATE FLOW CONTROL

Item	Response	Completion
FT2220 LIQUID FUEL FLOW TRANSMITTER	ZERO: 0 lb/min INH2O SPAN: 80 lb/min INH2O	KongsakW@chevron.com 9/4/2024 7:56:23 AM
FCE2130 ACTUATOR, GAS FUEL CONTROL VALVE	Pass/Fail: **Pass**	KongsakW@chevron.com 9/4/2024 7:57:03 AM
FCE2225 ACTUATOR, LIQUID FUEL CONTROL VALVE	Pass/Fail: **Pass**	KongsakW@chevron.com 9/1/2024 7:17:33 PM

SHUTDOWN TASK - CHECK AND INSPECT RTD SENSOR

Item	Response	Completion
TE3100 RTD, LUBE OIL TANK TEMPERATURE	85 Deg.F	KongsakW@chevron.com 9/1/2024 7:23:36 PM
TE3200 RTD, LUBE OIL HEADER TEMPERATURE	86 Deg.F	KongsakW@chevron.com 9/1/2024 7:23:44 PM
TE2113 RTD, GAS FUEL SUPPLY TEMPERATURE	85 Deg.F	KongsakW@chevron.com 9/1/2024 7:23:51 PM
TE1110 RTD, TURBINE AIR INLET TEMPERATURE	84 Deg.F	KongsakW@chevron.com 9/1/2024 7:23:58 PM
TE6110 RTD, ENCLOSURE TEMPERATURE	88 Deg.F	KongsakW@chevron.com 9/1/2024 7:24:12 PM
TE4230 RTD, GENERATOR BEARING DRIVEN END	105 Deg.F	KongsakW@chevron.com 9/1/2024 7:24:23 PM
TE4240 RTD, GENERATOR BEARING EXCITER END	98 Deg.F	KongsakW@chevron.com 9/1/2024 7:24:39 PM
TE4210 RTD, GENERATOR WINDING PHASE A	107 Deg.F	KongsakW@chevron.com 9/1/2024 7:24:58 PM
TE4213 RTD, GENERATOR WINDING PHASE B	103 Deg.F	KongsakW@chevron.com 9/1/2024 7:25:16 PM
TE4216 RTD, GENERATOR WINDING PHASE C	103 Deg.F	KongsakW@chevron.com 9/1/2024 7:25:35 PM

SHUTDOWN TASK - CHECK AND INSPECT TC SENSOR

Item	Response	Completion
TE1150 THERMOCOUPLE, T5 TEMPERATURE INPUT	88 DegF	KongsakW@chevron.com 9/1/2024 7:26:26 PM
TE1151 THERMOCOUPLE, T5 TEMPERATURE INPUT	88 DegF	KongsakW@chevron.com 9/1/2024 7:26:28 PM
TE1152 THERMOCOUPLE, T5 TEMPERATURE INPUT	88 DegF	KongsakW@chevron.com 9/1/2024 7:26:30 PM
TE1153 THERMOCOUPLE, T5 TEMPERATURE INPUT	88 DegF	KongsakW@chevron.com 9/1/2024 7:26:31 PM
TE1154 THERMOCOUPLE, T5 TEMPERATURE INPUT	88 DegF	KongsakW@chevron.com 9/1/2024 7:26:33 PM
TE1155 THERMOCOUPLE, T5 TEMPERATURE INPUT	88 DegF	KongsakW@chevron.com 9/1/2024 7:26:34 PM

SHUTDOWN TASK - CHECK AND CALIBRATE VIBRATION SYSTEM

Item	Response	Completion
VE4230 DISPLACEMENT PROBE, GENERATOR BEARING DRIVEN END (X-AXIS)	- 8.3 VOLT	KongsakW@chevron.com 9/1/2024 7:27:21 PM
VE4231 DISPLACEMENT PROBE, GENERATOR BEARING DRIVEN END (Y-AXIS)	- 9.3 VOLT	KongsakW@chevron.com 9/1/2024 7:27:32 PM
VE4240 DISPLACEMENT PROBE, GENERATOR BEARING EXCITER END (X-AXIS)	- 9.3 VOLT	KongsakW@chevron.com 9/1/2024 7:27:40 PM
VE4241 DISPLACEMENT PROBE, GENERATOR BEARING EXCITER END (Y-AXIS)	- 9.4 VOLT	KongsakW@chevron.com 9/1/2024 7:28:00 PM
VE4765 ACCELEROMETER PROBE,	- 7.52 VOLT	KongsakW@chevron.com

GEARBOX 9/1/2024 7:28:20 PM

SHUTDOWN TASK - CHECK AND INSPECTION SOLENOID VALVE

Item	Response	Completion
SV2120 PILOT, PRIMARY FUEL SHUT-OFF VALVE	103.2 Ohm	KongsakW@chevron.com 9/1/2024 7:28:59 PM
SV2121 GAS VENT SHUT-OFF VALVE	101.3 Ohm	KongsakW@chevron.com 9/1/2024 7:29:12 PM
SV2124 PILOT, SECONDARY FUEL SHUT-OFF VALVE	178.4 Ohm	KongsakW@chevron.com 9/1/2024 7:29:21 PM
SV2641 GAS MANIFOLD PURGE VALVE #1	82.2 Ohm	KongsakW@chevron.com 9/1/2024 7:29:51 PM
SV2642 GAS MANIFOLD PURGE VALVE #2	81.7 Ohm	KongsakW@chevron.com 9/1/2024 7:30:01 PM
SV2224 SOLENOID, LIQUID FUEL BYPASS VALVE	101.3 Ohm	KongsakW@chevron.com 9/1/2024 7:30:22 PM
SV2260 SOLENOID, LIQUID FUEL PURGE VALVE	104.9 Ohm	KongsakW@chevron.com 9/1/2024 7:30:46 PM
SV2222 SOLENOID, SECONDARY LIQUID FUEL SHUTOFF	176.5	KongsakW@chevron.com 9/1/2024 7:31:00 PM
SV2250 LIQUID FUEL TORCH SHUT-OFF	101.3 Ohm	KongsakW@chevron.com 9/1/2024 7:31:10 PM
SV2220 PILOT, LIQUID FUEL SHUT-OFF	101.5 Ohm	KongsakW@chevron.com 9/1/2024 7:31:23 PM
SV6430 AIR ASSIST SHUT-OFF	104.6 Ohm	KongsakW@chevron.com 9/1/2024 7:31:34 PM
SV1720 ON-CRANK CLEANING SHUT-OFF	53.6 Ohm	KongsakW@chevron.com 9/1/2024 7:31:49 PM
SV1710 PILOT, ON-LINE CLEANING SHUT-OFF VALVE	63.6 Ohm	KongsakW@chevron.com 9/1/2024 7:32:06 PM

SHUTDOWN TASK - CHECK AND FUNCTION TEST SPEED SENSOR

Item	Response	Completion
CHECK AND RECORD IMPEDANCE / VOLTAGE OF SPEED MAGNETIC PICKUP	IMPEDANCE(OHM): 96.5 VOLTAGE(VOLT): 0.3	KongsakW@chevron.com 9/4/2024 8:30:33 AM
SIMULATE FREQUNCY @ 10% SPEED SENSOR (996.7 Hz)	10 RPM	KongsakW@chevron.com 9/1/2024 7:33:35 PM
SIMULATE FREQUNCY @ 105% SPEED SENSOR (10465 Hz)	105 RPM	KongsakW@chevron.com 9/1/2024 7:33:43 PM
SIMULATE FREQUNCY @ 108% SPEED SENSOR (10765 Hz)	108 RPM	KongsakW@chevron.com 9/1/2024 7:33:53 PM
SIMULATE FREQUNCY @ 15% BACK-UP OVERSPEED SENSOR (1308 Hz)	15 RPM	KongsakW@chevron.com 9/1/2024 7:35:03 PM
SIMULATE FREQUNCY @ 110% BACK-UP OVERSPEED SENSOR (9561 Hz)	110 RPM	KongsakW@chevron.com 9/1/2024 7:35:09 PM

SHUTDOWN TASK - CHECK AND CALIBRATE HEAT DETECTION SYSTEM

Item	Response	Completion
TS6540 SWITCH, FIRE SYSTEM THERMAL DETECTOR (Turbine) SET 325 Deg.F	Pass/Fail: **Pass**	KongsakW@chevron.com 9/1/2024 7:36:09 PM
TS6541 SWITCH, FIRE SYSTEM THERMAL DETECTOR (Turbine) SET 325 Deg.F	Pass/Fail: **Pass**	KongsakW@chevron.com 9/1/2024 7:36:16 PM
TS6542 SWITCH, FIRE SYSTEM THERMAL DETECTOR (DRIVE AFT) SET 325 Deg.F	Pass/Fail: **Pass**	KongsakW@chevron.com 9/1/2024 7:36:19 PM

SHUTDOWN TASK - CHECK AND CALIBRATE FLAME DETECTION SYSTEM

Item	Response	Completion
CLEAN UV/IR FLAME DETECTOR SENSOR LENS	Yes	KongsakW@chevron.com 9/1/2024 7:36:23 PM
DTF6510 DETECTOR, FIRE SYSTEM (LUBE OIL MODULE)	Pass/Fail: **Pass**	KongsakW@chevron.com 9/1/2024 7:36:25 PM
DTF6511 DETECTOR, FIRE SYSTEM (FUEL RING RIGHT HAND SIDE)	Pass/Fail: **Pass**	KongsakW@chevron.com 9/1/2024 7:36:26 PM
DTF6512 DETECTOR, FIRE SYSTEM (FUEL RING LEFT HAND SIDE)	Pass/Fail: **Pass**	KongsakW@chevron.com 9/1/2024 7:36:28 PM

SHUTDOWN TASK - CHECK AND CALIBRATE GAS DETECTION SYSTEM

Item	Response	Completion
DTG6561 SENSOR, GAS DETECTION (ENCLOSURE AIR INLET)(H 10, HH 25 %LEL)	Pass/Fail: **Pass**	KongsakW@chevron.com 9/1/2024 7:37:00 PM

DTG6571 SENSOR, GAS DETECTION (FUEL GAS AREA #1)(H 10, HH 25 %LEL)	Pass/Fail: **Pass**	KongsakW@chevron.com 9/1/2024 7:37:01 PM
DTG6572 SENSOR, GAS DETECTION (FUEL GAS AREA #2)(H 10, HH 25 %LEL)	Pass/Fail: **Pass**	KongsakW@chevron.com 9/1/2024 7:37:03 PM
DTG6581 SENSOR, GAS DETECTION (ENCLOSURE EXHAUST)(H 10, HH 25 %LEL)	Pass/Fail: **Pass**	KongsakW@chevron.com 9/1/2024 7:37:04 PM
DTG6567 SENSOR, GAS DETECTION, (TURBINE AIR INLET)(H 10, HH 25 %LEL)	Pass/Fail: **Pass**	KongsakW@chevron.com 9/1/2024 7:37:06 PM

SHUTDOWN TASK - FIRE SUPPRESSION CO2 SYSTEM

Item	Response	Completion
PS6610 CO2 COMMON RELEASE CONFIRM SWITCH	Pass/Fail: **Pass**	KongsakW@chevron.com 9/1/2024 7:37:30 PM
SV6611 CO2 CYLINDER SOLENOID VALVE	Pass/Fail: **Pass**	KongsakW@chevron.com 9/1/2024 7:37:44 PM
SV6612 EXTENDED CO2 CYLINDER SOLENOID VALVE	Pass/Fail: **Pass**	KongsakW@chevron.com 9/1/2024 7:37:47 PM
REMOVE TO RECHARGE WHEN FIND CO2 CYL. GROSS WEIGHT LOSTS MORE THAN 10% OF STAMPED AND RECORDS (LBS.) AND REPLACE CYL WHICH SERVICES OVER 12 YRS TO MAINTENANCE AND HYDRO TEST.	Yes	KongsakW@chevron.com 9/1/2024 7:37:57 PM
MAIN CYLINDER#1 WEIGHT	295 LBS	KongsakW@chevron.com 9/4/2024 7:59:00 AM
MAIN CYLINDER#2 WEIGHT	290 LBS	KongsakW@chevron.com 9/4/2024 7:59:07 AM
MAIN CYLINDER#3 WEIGHT	220 LBS	KongsakW@chevron.com 9/4/2024 7:59:12 AM
MAIN CYLINDER#4 WEIGHT	210 LBS	KongsakW@chevron.com 9/4/2024 7:59:16 AM

SHUTDOWN TASK - ELECTRICAL SYSTEM

Item	Response	Completion
CHECK BATTERY CHARGER FOR PROPER OPERATION.	Yes	KongsakW@chevron.com 9/1/2024 7:43:31 PM
FLOAT CHARGE MODE	VOLTAGE(V): 28 Vdc CURRENT(A): 15 Amp	KongsakW@chevron.com 9/1/2024 7:53:10 PM
HIGH RATE CHARGE CURRENT	VOLTAGE(V): 28 Vdc CURRENT(A): 15 Amp	KongsakW@chevron.com 9/1/2024 7:53:18 PM
CHECK BATTERY BANK VOLTAGE	26.75 V	KongsakW@chevron.com 9/1/2024 7:55:53 PM
Comments/Recommendations: Battery 1,2,3,4 (13.37 / 13.36 / 13.36 / 13.39)Vdc		
MEASURE STARTER MOTOR INSULATION RESISTANCE (VFD)	T1: 550 M-ohm T2: 550 M-ohm T3: 550 M-ohm	KongsakW@chevron.com 9/1/2024 8:12:14 PM
Comments/Recommendations: Winding Resistance 0.1 ohm / space heater 160.2 ohm		
MEASURE LUBE OIL COOLER MOTOR #1 INSULATION RESISTANCE	T1: 550 M-ohm T2: 550 M-ohm T3: 550 M-ohm	KongsakW@chevron.com 9/1/2024 8:12:59 PM
Comments/Recommendations: Winding Resistance 2.1 ohm		
MEASURE LUBE OIL COOLER MOTOR #2 INSULATION RESISTANCE	T1: 550 M-ohm T2: 550 M-ohm T3: 550 M-ohm	KongsakW@chevron.com 9/1/2024 8:13:33 PM
Comments/Recommendations: Winding Resistance 4.1 ohm		
MEASURE LUBE OIL COOLER MOTOR #3 INSULATION RESISTANCE	T1: 550 M-ohm T2: 550 M-ohm T3: 550 M-ohm	KongsakW@chevron.com 9/1/2024 8:13:55 PM
Comments/Recommendations: Winding Resistance 3.9 ohm		
MEASURE ENCLOSURE VENT FAN MOTOR#1 INSULATION RESISTANCE	T1: 550 M-ohm T2: 550 M-ohm T3: 550 M-ohm	KongsakW@chevron.com 9/1/2024 8:14:26 PM
Comments/Recommendations: Winding Resistance 0.6 ohm		
MEASURE ENCLOSURE VENT FAN MOTOR#2 INSULATION RESISTANCE	T1: 550 M-ohm T2: 550 M-ohm T3: 550 M-ohm	KongsakW@chevron.com 9/1/2024 8:15:03 PM
Comments/Recommendations: Winding Resistance 0.6 ohm		
MEASURE PRE/POST LUBE OIL PUMP MOTOR (AC) INSULATION RESISTANCE	T1: 550 M-ohm T2: 550 M-ohm T3: 550 M-ohm	KongsakW@chevron.com 9/1/2024 8:15:19 PM

Comments/Recommendations:
Winding Resistance 0.8 ohm

MEASURE PRE/POST LUBE OIL PUMP MOTOR (DC) INSULATION RESISTANCE	55 M-ohm	KongsakW@chevron.com 9/4/2024 8:00:01 AM

Comments/Recommendations:
Winding Resistance 0.4 ohm

MEASURE LIQUID FUEL BOOSTER PUMP MOTOR INSULATION RESISTANCE	T1: 550 M-ohm T2: 550 M-ohm T3: 550 M-ohm	KongsakW@chevron.com 9/1/2024 8:17:22 PM

Comments/Recommendations:
Winding Resistance 21.4 ohm

MEASURE LIQUID FUEL MAIN PUMP MOTOR INSULATION RESISTANCE	T1: 550 M-ohm T2: 550 M-ohm T3: 550 M-ohm	KongsakW@chevron.com 9/1/2024 8:17:42 PM

Comments/Recommendations:
Winding Resistance 2.8 ohm

MEASURE GENERATOR INSULATION RESISTANCE	T1: 17.8 M-ohm T2: 17.8 M-ohm T3: 17.8 M-ohm	KongsakW@chevron.com 9/4/2024 8:39:26 AM

Comments/Recommendations:
Test Voltage 2500 V PMG. resistance 7.8 ohm / insulation 30 M ohm @ 250 V Exciter resistance 39 ohm / insulation 40 M ohm @ 250 V

MEASURE GENERATOR POLARIZATION INDEX TEST	T1: 2.1 M-ohm T2: 2.1 M-ohm T3: 2.1 M-ohm	KongsakW@chevron.com 9/4/2024 8:05:45 AM

Comments/Recommendations:
Test Voltage 2500 V

START AND TEST RUN UNIT

Item	Response	Completion
MEASURE STARTER MOTOR RUNNING CURRENT (VFD)	A1: 118.25 A A2: 118.25 A A3: 118.25 A	KongsakW@chevron.com 9/1/2024 8:04:25 PM
MEASURE LUBE OIL COOLER MOTOR #1 RUNNING CURRENT	A1: 4.5 A A2: 4.6 A A3: 4.5 A	KongsakW@chevron.com 9/1/2024 8:04:58 PM
MEASURE LUBE OIL COOLER MOTOR #2 RUNNING CURRENT	A1: 4.4 A A2: 4.5 A A3: 4.3 A	KongsakW@chevron.com 9/1/2024 8:05:14 PM
MEASURE LUBE OIL COOLER MOTOR #3 RUNNING CURRENT	A1: 4.3 A A2: 4.3 A A3: 4.4 A	KongsakW@chevron.com 9/1/2024 8:05:35 PM
MEASURE ENCLOSURE VENT FAN MOTOR#1 RUNNING CURRENT	A1: 20.7 A A2: 20.8 A A3: 20.7 A	KongsakW@chevron.com 9/1/2024 8:08:39 PM
MEASURE ENCLOSURE VENT FAN MOTOR#2 RUNNING CURRENT	A1: 18.9 A A2: 18.8 A A3: 18.8 A	KongsakW@chevron.com 9/1/2024 8:09:00 PM
MEASURE PRE/POST LUBE OIL PUMP MOTOR (AC) RUNNING CURRENT	A1: 2.1 A A2: 2.1 A A3: 2.1 A	KongsakW@chevron.com 9/4/2024 8:23:31 AM
MEASURE PRE/POST LUBE OIL PUMP MOTOR (DC) RUNNING CURRENT	27 A	KongsakW@chevron.com 9/4/2024 8:07:25 AM
MEASURE LIQUID FUEL BOOSTER PUMP MOTOR RUNNING CURRENT	A1: 1.1 A A2: 1.0 A A3: 1.0 A	KongsakW@chevron.com 9/1/2024 8:07:18 PM
MEASURE LIQUID FUEL MAIN PUMP MOTOR RUNNING CURRENT	A1: 1.5 A A2: 1.6 A A3: 1.5 A	KongsakW@chevron.com 9/1/2024 8:07:32 PM

FINAL CHECK

Item	Response	Completion
RECHECK ALL ACCESSIBLE INSTRUMENT SYSTEMS FOR SIGN OF BURNT OR LOOSE CONNECTION	Yes	KongsakW@chevron.com 9/1/2024 8:03:28 PM
RE-INSTALL DISCHARGE SOLENOIDS ONTO CO2 CYLINDER HEADS, REMOVE FORCE AND SIGN OFF ISOLATION LOG AND RETURN TO NORMAL OPERATION	Yes	KongsakW@chevron.com 9/1/2024 8:03:29 PM
SIGN OFF WORK PERMIT AND CLOSE PM WORK ORDER	Yes	KongsakW@chevron.com 9/1/2024 8:03:30 PM

©2024, rev. 3.1.0.0

Inspection Report

Work Order Details

Inspection Type
Gen-Turbine-Mech (THA)

Work Order #
1237243-BEMECHROV

Description
8K SOLAR TURBINE GEN1-BLQ-ITPM

Scheduled Date
10/18/2024

Status
85 - Closed

Local Code 11
C40

Local Code 13
ITP

Service Type
MH4400

Work Center
BEMECHROV

Branch Plant
3800BLQNTA

Fields
BENCHAMAS

Platform Tag
BENCHAMAS

ECA Ranking
2

PM Status
99

PM Description
8K SOLAR TURBINE GEN1-BLQ-ITPM

SD Category
UO

Plan Date
8/28/2024 12:00:00 AM

Equipment Details

Equipment #
BELQ-ZAN-Q7801A

Description
5Y INSPECTION CO2 GEN

Area
BENCHAMAS

Equipment Class
Electric Generator

Assignment and Status

Completed by
[redacted]

Completed on
9/7/2024 11:12:35 PM

Status
Completed

Approved by
[redacted]

Approved on
Thursday, January 09, 2025 13:30:31

Inspection Summary

Completed by Kritsadakorn C./Worawat S./Aphiwat S./Narunart C.

Reviewer Summary

Equipment Details

Field Name	Original Value	New Value

Inspection Items

General

Item	Response	Completion
SELECT LOCATION	BENCHAMAS	LVOI@chevron.com 9/1/2024 1:33:49 PM
SELECT MAINTENANCE INTERVAL	8K	LVOI@chevron.com 9/1/2024 1:33:52 PM

PRE-REQUISITE TASKS

Item	Response	Completion
-TOOL BOX MEETING AND HA/JSA DISCUSSION (ADDITION OR REVISE IF REQUIRE) -COORDINATE WITH PRODUCTION TO MAKE EQUIPMENT AVAILABLE FOR INSPECTION -VISUALLY INSPECT ALL ACCESSIBLE PARTS FOR LEAKS, LOOSE CONNECTIONS AND	Yes	LVOI@chevron.com 9/1/2024 1:33:55 PM

FITTINGS AND NON STANDARD CONDITIONS

PRE-SHUTDOWN TASK

Item	Response	Completion
REVIEW EFFICIENCY AND PERFORMANCE DATA	Yes	LVOI@chevron.com 9/1/2024 1:34:11 PM
REVIEW VIBRATION SURVEY AND RECORD TRADING FOR ENGINE AND BEARING CONDITION	Yes	LVOI@chevron.com 9/1/2024 1:34:12 PM
REVIEW BORE SCOPE RECORDS FOR ANY DISTRESS, BURNT AND CRACKS FROM PREVIOUS RECORDS	Yes	LVOI@chevron.com 9/1/2024 1:34:15 PM
BEFORE SHUTDOWNTHE UNIT, A WALKAROUND INSPECTION IS RECOMMENDED TO ENSURE EQUIPMENT IS FUNCTIONING PROPERLY AND DETECT LEAKS OR OBVIOUS FAULTS	Yes	LVOI@chevron.com 9/1/2024 1:34:24 PM
TAKE READING AND RECORD ENGINE SPEED, PCD AND TEMPERATURE TO EVALUATE RESULTS AGAINST BASELINE DATA	Yes	LVOI@chevron.com 9/1/2024 1:34:29 PM
ASSIST MECH/IE TECH.TO SHUTDOWN ENGINE ON ONE OF SAFETY DEVICES	Yes	LVOI@chevron.com 9/1/2024 1:34:33 PM

SHUTDOWN TASK

Item	Response	Completion
LOG OUT/TAG OUT AND DEPRESSURIZE SHUT OFF GAS FUEL SUPPLY AND STARTING GAS VALVES	Yes	LVOI@chevron.com 9/1/2024 1:34:59 PM
LOCK OUT PRE/POST AND BACKUP LUBE OIL PUMPS	Yes	LVOI@chevron.com 9/1/2024 1:35:00 PM
LOCK OUT LUBE OIL COOLER AND ENCLOSURE VENT FANS	Yes	LVOI@chevron.com 9/1/2024 1:35:01 PM
LOCK OUT FIRE PROTECTION/CO2 SYSTEM	Yes	LVOI@chevron.com 9/1/2024 1:35:07 PM
VISUALLY INSPECT ALL ACCESSIBLE PARTS FOR FUEL AND OIL LEAKS, CRACK, LOOSE CONNECTIONS OF FITTINGS, EXCESSIVE VRIBRATION, NOISE, AND NON STANDARD CONDITIONS	Yes	LVOI@chevron.com 9/1/2024 1:35:29 PM

START SYSTEMS TASK

Item	Response	Completion
INSPECT STARTER CLUTCH, IF APPLICABLE, TO ENSURE LOCK-UP IN ONE DIRECTION AND FREE ROTATION IN THE OTHER	Yes	LVOI@chevron.com 9/1/2024 1:35:54 PM
CHECK STARTER ASSEMBLY FOR UNUSUAL WEAR, LOOSENESS AND LEAKAGE	Yes	LVOI@chevron.com 9/1/2024 1:36:01 PM
VERIFY PROPER OPERATION OF VFD WHEN UNIT IS RESTARTED	Yes	LVOI@chevron.com 9/1/2024 1:36:06 PM
INSPECT LUBE OIL LEAKAGE AT STARTER MOTOR FOR LIP SEAL CONDITION	Yes	LVOI@chevron.com 9/1/2024 1:36:13 PM
RECORD VFD DATA AS VOLTAGE / CURRENT / FREQUENCY AT FULL LOAD	VOLTAGE (VOLTS): 400 CURRENT (AMPS): 260 FREQUENCY (HZ): 60	LVOI@chevron.com 9/10/2024 9:43:22 AM

FUEL SYSTEM TASK

Item	Response	Completion
REPLACE PILOT GAS SUPPLY FILTER AND O-RING	Yes	LVOI@chevron.com 9/1/2024 1:37:39 PM
CLEANE UP FUEL GAS INLET STRAINER	Yes	LVOI@chevron.com 9/1/2024 1:37:43 PM
REPLACE O-RING VALVE PILOT CONTROL	Yes	LVOI@chevron.com 9/1/2024 1:38:03 PM
REPLACE PRIMARY FUEL FILTER OF LIQUID BOOST PUMP	Yes	LVOI@chevron.com 9/1/2024 1:41:36 PM
REPLACE SECONDARY FUEL FILTER OF LIQUID BOOST PUMP	Yes	LVOI@chevron.com 9/1/2024 1:42:24 PM

Comments/Recommendations:
Clean up.

LUBE OIL SYSTEMS TASK

Item	Response	Completion
CHECK PRE-POST LUBE OIL PUMP/BACKUP PRE-POST LUBE OIL PUMP FOR ANY DEFECTS LEAKS, DAMAGE PIPE WORKS, LOOSE CONNECTIONS AND FITTINGS	Yes	LVOI@chevron.com 9/1/2024 1:42:34 PM
CHANGE MAIN LUBE OIL FILTER	Yes	LVOI@chevron.com 9/1/2024 1:42:38 PM
CHANGE HYDRAULIC OIL FILTER	Yes	LVOI@chevron.com 9/1/2024 1:42:41 PM
CHANGE LUBE OIL FILTER HOUSING COVER O-RING	Yes	LVOI@chevron.com 9/1/2024 1:42:45 PM
REMOVE LUBE OIL PCV (BACK PRESSUR REGULATOR) REMARK : TO INSPECT AND ADJUST TO 55 PSIG, REPLACE IF REQUIRED	Yes	LVOI@chevron.com 9/1/2024 1:43:05 PM
INSPECT LUBE OIL COOLER FAN BLADE FOR ANY DEFECTS AND CORRECT	Yes	LVOI@chevron.com 9/1/2024 1:43:08 PM
INSPECT OIL COOLER CORE, PIPE AND HOSE FOR LEAK, DAMAGE OR CORROSION	Yes	LVOI@chevron.com 9/1/2024 1:43:10 PM
CHECK LUBE OIL COOLER HOLD DOWN BOLT TIGHTNESS	Yes	LVOI@chevron.com 9/1/2024 1:43:19 PM
CHECK LUBE OIL RESERVOIR LEVEL AND TOP UP LUBE OIL SHELL TURBO T-32	Yes	LVOI@chevron.com 9/1/2024 1:43:21 PM
CHECK BACK PRESSURE OF LUBE OIL RESERVOIR TO EVALUATE BLOCKAGE OF FLAME ARRESTOR/LUBE OIL MIST ELEMINATOR FROM LOG SHEET/LOCAL CONTROL PANEL	Yes	LVOI@chevron.com 9/1/2024 1:43:24 PM

ENCLOSURE TASK

Item	Response	Completion
REPLACE PRIMARY AIR INLET FILTERS	Yes	LVOI@chevron.com 9/1/2024 1:43:57 PM
REPLACE SECONDARY AIR INLET FILTERS	Yes	LVOI@chevron.com 9/1/2024 1:43:58 PM
INSPECT AIR INLET FILTER HOUSING FOR DAMAGE, LEAK, LOOSE OBJECT, CORROSION CLEAN UP FILTER HOUSING	Yes	LVOI@chevron.com 9/1/2024 1:43:59 PM
INSPECT WATER LEVEL OF AIR FILTER HOUSING WATER TRAP	Yes	LVOI@chevron.com 9/1/2024 1:44:15 PM
CHECK FLAME ARRESTOR BACK PRESSURE OF LUBE OIL RESERVOIR TO EVALUATE BLOCKAGE OF FLAME ARRESTOR/LUBE OIL MIST ELEMINATOR FROM LOG SHEET/LOCAL CONTROL PANEL	Yes	LVOI@chevron.com 9/1/2024 1:44:30 PM
VISALLY INSPECT AIR TRANSITION DUCT FOR CRACKS OR DISTORTION	Yes	LVOI@chevron.com 9/1/2024 1:44:39 PM

AIR SYSTEM

Item	Response	Completion
CHECK INLET GUIDE VANE FOR PROPER POSITION ON FULLY OPEN & CLOSE	Yes	LVOI@chevron.com 9/1/2024 1:44:45 PM
CHECK ACTUATOR CYLINDER LINKAGE	Yes	LVOI@chevron.com 9/1/2024 1:44:47 PM
INSPECT ENGINE COMP. VARIABLE VANE MECHANISM FOR WEAR BUSHING, BENT ARM, LOOSE LINKAGE, ENSURE STOP SETTING IS CORRECTED	Yes	LVOI@chevron.com 9/1/2024 1:44:52 PM
INSPECT BLEED VALVE FOR SRING CONDITION, GASKET	Yes	LVOI@chevron.com 9/1/2024 1:45:54 PM
CHECK FOR LOOSE OR DAMAGE SIGNAL WIRE TO ACTUATOR IF APPLICABLE	Yes	LVOI@chevron.com 9/1/2024 1:45:08 PM
INSPECT BLEED VALVE AND RECORD FUNCTION TEST OPEN/CLOSE	OPEN: 0 PSIG CLOSE: 0 PSIG	LVOI@chevron.com 9/1/2024 1:45:57 PM
RECORD BLEED VALVE TRAVELLING TIME OPEN/CLOSE	OPEN: 0 Sec. CLOSE: 0 Sec.	LVOI@chevron.com 9/1/2024 1:45:59 PM

TURBINE ENGINE TASK

Item	Response	Completion
DISASSEMBLE, CLEAN AND INSPECT DRAIN VALVE, CHECK CONDITION AND FUNCTION TEST	Yes	LVOI@chevron.com 9/1/2024 1:46:07 PM
PERFORM BORESCOPE INSPECTIONS FOR INTERNAL PART OF HOT SECTIONS AND TURBINE COMPRESSOR	Yes	LVOI@chevron.com 9/1/2024 1:46:09 PM

VISALLY INSPECT EXHAUST COLLECTOR/EXHAUST EXPANSION JOINT FOR CRACKS OR DISTORTION	Yes	LVOI@chevron.com 9/1/2024 1:46:12 PM
REPLACE SPARK PLUG AND ADJUSTING GAP SPARK PLUG AS SPECIFICATION	Yes	LVOI@chevron.com 9/1/2024 1:46:13 PM

GAS FUEL MANIFOLD TASK

Item	Response	Completion
REMOVE FUEL INJECTORS AND TORCH IGNITER. INSPECT FOR CARBON BUILDUP, DISTORTION, BURNING, CRACK AND WEAR, CLEAN AND REPLACE WITH NEW O-RINGS AND GASKETS. NOTE: MARK THE LOCATION OF EACH FUEL INJECTOR BEFORE REMOVAL. INSTALL FUEL INJECTOR DAMMY TO SUPPORT COMBUSTORS PERFORM BORE SCOPE BEFORE RE-INSTALL FUEL INJECTORS.	Yes	LVOI@chevron.com 9/1/2024 1:46:17 PM

GEAR UNIT TASK

Item	Response	Completion
CHECK GEARBOX HOUSING FOR ANY OIL LEAKAGE, REPAIR IF NECESSARY	Yes	LVOI@chevron.com 9/1/2024 1:46:29 PM
OPEN GEARBOX COVER AND VISUAL INSPECT GEAR TEETH CONDITON	Yes	LVOI@chevron.com 9/1/2024 1:46:32 PM
CHECK HOLD DOWN BOLTS FOR LOOSEN AND TIGHTNESS	Yes	LVOI@chevron.com 9/1/2024 1:46:33 PM

DRIVEN EQUIMENT TASK

Item	Response	Completion
CHECK AND INSPECT DRIVEN COUPLING TO GENERATOR, CHECK FOR TIGHTNESS OF BOLTS AND NUTS RE-TORQUE AS SPECIFICATION	12000 LB-inch	LVOI@chevron.com 9/11/2024 10:47:05 AM
CHECK HOLD DOWN BOLTS OF GENERATOR TIGHTNESS AND TORQUE AS SPECIFICATION	5520 LB-inch	LVOI@chevron.com 9/11/2024 10:50:41 AM

ENGINE CRANK SOAK WASH TASK

Item	Response	Completion
AFTER ENGINE SHUTDOWN FOR AT LEAST 30 MINUTES TO ALLOW ENGINE TO COOLDOWN, PERFORM ENGINE WASH USING APPROVE FLUID	Yes	LVOI@chevron.com 9/1/2024 1:47:05 PM
REMOVE DRAIN LINES OF ENGINE PRIOR ENGINE WASH	Yes	LVOI@chevron.com 9/1/2024 1:47:06 PM
ALLOW SOAKING SETTLE FOR 15 MINUTES AND THEN CRANK ENGINE ENSURE THAT FLUID WASTE FROM ENGINE DRAINS IS CLEAN, IF NOT REPEAT ENGINE WASH AGAIN UNIT FLUID IS CLEAN	Yes	LVOI@chevron.com 9/1/2024 1:47:08 PM
APPROXIMATELY 15 TO 30 MINUTES AFTER COMPLETION OF CRANK WASH A WATER RINSE IS RECOMMENDED	Yes	LVOI@chevron.com 9/1/2024 1:47:09 PM
SPIN DRY FOR ONE TIME AFTER WASHING	Yes	LVOI@chevron.com 9/1/2024 1:47:11 PM
RE-INSTALL DRAIN LINE OF ENGINE AFTER WASHED. NOTE: TO ACCURATELY MEASURE THE PERFORMANCE OF THE COMPRESSOR CLEANING SYSTEM AND DETERMINE NECESSARY CHANGES TO CLEANING FREQUENCY AND DOSAGE, THE ENGINE OPERATING PARAMETERS SHOULD BE RECORDED PRIOR TO AND FOLLOWING EACH CLEANING.	Yes	LVOI@chevron.com 9/1/2024 1:47:15 PM

FINAL CHECK

Item	Response	Completion
COORDINATE WITH OPERATIONS/OTHER CRAFTS TO START ENGINE	Yes	LVOI@chevron.com 9/1/2024 1:47:24 PM
VISUALLY INSPECT ALL ACCESSIBLE PARTS FOR GAS FUEL AND LUBE OIL LEAKS, EXCESSIVE VIBRATION AND NOISE, LOOSE CONNECTIONS AND FITTINGS	Yes	LVOI@chevron.com 9/1/2024 1:47:25 PM
TAKE READINGS AND RECORD ENGINE PARAMETER: ENGINE HOURS	8505 HRS.	LVOI@chevron.com 9/11/2024 11:00:17 AM
TAKE READINGS AND RECORD ENGINE PARAMETER: PCD	106 PSIG	LVOI@chevron.com 9/11/2024 10:36:57 AM

TAKE READINGS AND RECORD ENGINE PARAMETER: NGP (%)	100% %	LVOI@chevron.com 9/11/2024 10:37:15 AM
TAKE READINGS AND RECORD ENGINE PARAMETER: NPT (%)	- %	LVOI@chevron.com 9/6/2024 7:08:34 AM
TAKE READINGS AND RECORD ENGINE PARAMETER: T1 AIR INLET TEMPERATURE	88 F	LVOI@chevron.com 9/11/2024 10:37:47 AM
TAKE READINGS AND RECORD ENGINE PARAMETER: T5 AVG TEMPERATURE	918 F	LVOI@chevron.com 9/11/2024 10:37:54 AM
TAKE READINGS AND RECORD LUBE OIL SYSTEM PARAMETER: LUBE OIL PRESSURE	60 PSIG	LVOI@chevron.com 9/11/2024 10:38:17 AM
TAKE READINGS AND RECORD LUBE OIL SYSTEM PARAMETER: LUBE OIL HEADER TEMPERATURE	137 F	LVOI@chevron.com 9/11/2024 10:38:28 AM
TAKE READINGS AND RECORD LUBE OIL SYSTEM PARAMETER: LUBE OIL TANK TEMPERATURE	164 F	LVOI@chevron.com 9/11/2024 10:39:39 AM
TAKE READINGS AND RECORD LUBE OIL SYSTEM PARAMETER: LUBE OIL COOLER INLET TEMPERATURE	Not Applicable F	LVOI@chevron.com 9/11/2024 10:42:44 AM
TAKE READINGS AND RECORD LUBE OIL SYSTEM PARAMETER: LUBE OIL COOLER EXIT TEMPERATURE	Not Applicable F	LVOI@chevron.com 9/11/2024 10:42:46 AM
TAKE READINGS AND RECORD VIBRATION DATA: GP (IN/S)	0 Inch/Sec	LVOI@chevron.com 9/11/2024 10:43:49 AM
TAKE READINGS AND RECORD VIBRATION DATA: GEARBOX FWD (M/S2)	0 m/Sec2	LVOI@chevron.com 9/11/2024 10:44:05 AM
CONDUCT LIQUID FUEL TRANSFER MODE DURING OPERATION. OBSERVE SPEED, TEMPERATURE,AND LOAD READINGS FOR EXCESSIVE TRANSIENTS	Yes	LVOI@chevron.com 9/6/2024 7:08:49 AM
TAKE READINGS AND RECORD VIBRATION DATA: GEARBOX AFT (M/S2).	0 m/Sec2	LVOI@chevron.com 9/11/2024 10:45:36 AM
TAKE READINGS AND RECORD ENGINE PARAMETER: AIR INLET DP	3.2 PSIG	LVOI@chevron.com 9/11/2024 10:46:52 AM

JOB COMPLETION

Item	Response	Completion
-RECHECK ALL ACCESSIBLE SYSTEM FOR DAMAGE, FAULTS, LEAKS, LOOSE OR BROKEN CONNECTION -RETURN UNIT TO NORMAL OPERATION -ENSURE THE EQUIPMENT IS LEFT IN A SAFE CONDITION AND THE AREA LEFT TIDY -SIGN OFF THE WORK PERMIT AND RETURN IT TO THE AREA AUTHORITY	Yes	LVOI@chevron.com 9/1/2024 1:47:34 PM

©2024, rev. 3.1.0.0

Inspection Report

Work Order Details

Inspection Type
Gas Generator Centaur - 40 IE

Work Order #
1212814-BEIEROV

Description
8K SOLAR TURBINE GEN1-BLQ-ITPM

Scheduled Date
09/20/2023

Status
65 - Completed Ready for Review

Local Code 11
C40

Local Code 13
ITP

Service Type
MH4400

Work Center
BEIEROV

Branch Plant
3800BLQNTA

Fields
BENCHAMAS

Platform Tag
BENCHAMAS

ECA Ranking
3

PM Status
99

PM Description
8K SOLAR TURBINE GEN1-BLQ-ITPM

SD Category
UO

Plan Date
7/30/2023 12:00:00 AM

Equipment Details

Equipment #
BELQ-ZAN-Q7801B

Description
8K SOLAR TURBINE GEN1-BLQ-ITPM

Parent #
BELQ-GP

Area
BENCHAMAS

Equipment Class
EG - Electric Generator

Assignment and Status

Completed by
[redacted]

Completed on
9/1/2023 4:05:42 PM

Status
Completed

Approved by
[redacted]

Approved on
Thursday, January 09, 2025 13:30:31

Inspection Summary

Complete by : Wanchai M. / Nakorn S.

Date : 1 Sep 2023

Reviewer Summary

As found PMG low insulation 0.03 Ohm and then cleaned, drying with hot air, completed after checked PMG@ 52.4 M Ohm.

Equipment Details

Field Name	Original Value	New Value

Inspection Items

General

Item	Response	Completion
INTERVAL	8K	WMGN@chevron.com 8/29/2023 8:25:56 AM

PRE-REQUISITE TASKS

Item	Response	Completion
OBTAIN WORK PERMIT, REVIEW HA/JSA ANS CARRY OUT TOOLBOX MEETING.	Yes	WMGN@chevron.com 8/29/2023 8:25:58 AM
REVIEW/ SING UP START WORK CHECK PRIOR PERFORMING TASKS.	Yes	WMGN@chevron.com 8/29/2023 8:25:58 AM
COORDINATE WITH PRODUCTION &	Yes	WMGN@chevron.com

MECH TO PERFORM PM GAS GENERATOR.	8/29/2023 8:25:59 AM

SHUTDOWN TASK - VISUAL INSPECTION

Item	Response	Completion
CHECK CONNECTIONS CONDITION AND RE-TIGHTEN AS NECESSARY ON MARCHALING PANEL WHICH ARE INTERFACE WITH PACKAGE TO PROCESS CONTROL	Yes	WMGN@chevron.com 8/29/2023 8:26:17 AM
VISUALLY INSPECT ALL ACCESSIBLE ELECTRICAL SYSTEMS FOR ANY LOOSE OR BROKEN CONNECTIONS, DEFECTIVE CIRCUITRY AND NON STANDARD CONDITIONS	Yes	WMGN@chevron.com 8/29/2023 8:26:20 AM

SHUTDOWN TASK - CHECK AND CALIBRATE PRESSURE SWITCHES

Item	Response	Completion
PS3150 SWITCH, MAIN LUBE OIL PUMP #1 PERMISSIVE/TEST SET 6/4 PSI INC/DEC	Pass/Fail: **Pass**	WMGN@chevron.com 8/29/2023 8:26:24 AM
PS3170 SWITCH, BACKUP LUBE PUMP LOW PRESSURE TEST SET 8/6 PSI INC/DEC	Pass/Fail: **Pass**	WMGN@chevron.com 8/29/2023 8:26:32 AM
PS3200 SWITCH, BACKUP LUBE PUMP ACTIVATION SET 6/4 PSI INC/DEC	Pass/Fail: **Pass**	WMGN@chevron.com 8/29/2023 8:26:35 AM
PS3420 SWITCH, GENERATOR BEARING OIL PRESSURE LOW SHUTDOWN SET 6/4 PSI INC/DEC	Pass/Fail: **Pass**	WMGN@chevron.com 8/29/2023 8:26:37 AM
PS2106 SWITCH, LOW GAS FUEL PRESSURE ALARM (TRANSFER TO LIQUID) SET 175/150 PSI INC/DEC	Pass/Fail: **Pass**	WMGN@chevron.com 8/29/2023 8:26:39 AM
PS2121 SWITCH, GAS FUEL VENT BACK-PRESSURE HIGH ALARM SET 8/6 PSI INC/DEC	Pass/Fail: **Pass**	WMGN@chevron.com 8/29/2023 8:26:44 AM
PS2220 SWITCH, LIQUID FUEL PUMP OUTLET PRESSURE HIGH SHUTDOWN SET 960/840 PSI INC/DEC	Pass/Fail: **Pass**	WMGN@chevron.com 8/29/2023 8:26:47 AM
PDS1500 SWITCH, FLAMEOUT PROTECTION DELTA-P HIGH SHUTDOWN SET 2 PSID	Pass/Fail: **Pass**	WMGN@chevron.com 8/29/2023 8:26:48 AM

SHUTDOWN TASK - CHECK AND CALIBRATE LEVEL SWITCH

Item	Response	Completion
LS3101 SWITCH, LUBE OIL TANK LOW LEVEL SHUTDOWN SET 8.25 INCH FROM TOP TANK	Pass/Fail: **Pass**	WMGN@chevron.com 8/29/2023 8:26:54 AM

SHUTDOWN TASK - CHECK AND CALIBRATE PRESSURE TRANSMITTER

Item	Response	Completion
PDT3100 Lube Oil Tank Vent Range 0 -15 inH2O	ZERO: 0 INH2O SPAN: 15 INH2O	WMGN@chevron.com 8/29/2023 8:27:14 AM
PDT3240 LUBE OIL FILTER DELTA-P Range 0 - 100 PSID	ZERO: 0 PSID SPAN: 100 PSID	WMGN@chevron.com 8/29/2023 8:27:20 AM
PT3200 LUBE OIL HEADER PRESSURE Range 0 - 150 PSI	ZERO: 0 PSI SPAN: 150 PSI	WMGN@chevron.com 8/29/2023 8:27:26 AM
PT2113 MONITOR GAS FUEL PRESSURE Range 0 – 600 PSI	ZERO: 0 PSI SPAN: 600 PSI	WMGN@chevron.com 8/29/2023 8:27:31 AM
PDT2113 GAS FUEL SUPPLY FLOW Range 0 – 100 inH2O	ZERO: 0 INH2O SPAN: 100 INH2O	WMGN@chevron.com 8/29/2023 8:27:36 AM
PT2120 GAS FUEL PRESSURE Range 0 – 700 PSI	ZERO: 0 PSI SPAN: 700 PSI	WMGN@chevron.com 8/29/2023 8:27:40 AM
PT2121 GAS FUEL VALVE PRESSURE CHECK Range 0 – 700 PSI	ZERO: 0 PSI SPAN: 700 PSI	WMGN@chevron.com 8/29/2023 8:27:46 AM
PDT2131 GAS FUEL CONTROL DELTA-P Range 0 – 100 PSID	ZERO: 0 PSID SPAN: 700 PSID	WMGN@chevron.com 8/29/2023 8:27:50 AM
PT2640 GAS FUEL PURGE PRESSURE Range 0 – 700 PSI	ZERO: 0 PSI SPAN: 700 PSI	WMGN@chevron.com 8/29/2023 8:27:58 AM
PDT2201 LIQUID FUEL FILTER DIFFERENTIAL PRESSURE Range 0 – 100 PSID	ZERO: 0 PSID SPAN: 100 PSID	WMGN@chevron.com 8/29/2023 8:28:04 AM
PT2220 LIQUID FUEL PRESSURE Range : 0 – 150 PSI	ZERO: 0 PSI SPAN: 150 PSI	WMGN@chevron.com 8/29/2023 8:28:09 AM
PT2225 PUMP CHECK FUEL TRANSFER Range : 0 – 1500 PSI	ZERO: 0 PSI SPAN: 1500 PSI	WMGN@chevron.com 8/29/2023 8:28:14 AM
PT6400 MONITOR AIR SUPPLY	ZERO: 0 PSI SPAN: 700 PSI	WMGN@chevron.com 8/29/2023 8:28:29 AM

PDT1110 TURBINE AIR INLET DELTA-P Range 0 – 15 INH2O	ZERO: 0 INH2O SPAN: 15 INH2O	WMGN@chevron.com 8/29/2023 8:28:43 AM
PT1120 MONITOR PCD Range 0 – 700 PSI	ZERO: 0 PSI SPAN: 700 PSI	WMGN@chevron.com 8/29/2023 8:28:48 AM
PT1121 MONITOR PCD Range : 0 – 700 PSI	ZERO: 0 PSI SPAN: 700 PSI	WMGN@chevron.com 8/29/2023 8:28:53 AM
PDT6310 AIR INLET FILTER DELTA-P Range 0 – 10 INH2O	ZERO: 0 INH2O SPAN: 10 INH2O	WMGN@chevron.com 8/29/2023 8:28:58 AM
PDT6180 ENCLOSURE (DRIVER) PRESSURE DELTA-P Range : 0 – 3 INH2O	ZERO: 0 INH2O SPAN: 3 INH2O	WMGN@chevron.com 8/29/2023 8:29:04 AM

SHUTDOWN TASK - CHECK AND CALIBRATE FLOW CONTROL

Item	Response	Completion
FT2220 LIQUID FUEL FLOW TRANSMITTER	ZERO: 0 INH2O SPAN: 100 INH2O	WMGN@chevron.com 8/29/2023 8:29:37 AM
FCE2130 ACTUATOR, GAS FUEL CONTROL VALVE	Pass/Fail: **Pass**	WMGN@chevron.com 8/29/2023 8:29:39 AM
FCE2225 ACTUATOR, LIQUID FUEL CONTROL VALVE	Pass/Fail: **Pass**	WMGN@chevron.com 8/29/2023 8:29:42 AM

SHUTDOWN TASK - CHECK AND INSPECT RTD SENSOR

Item	Response	Completion
TE3100 RTD, LUBE OIL TANK TEMPERATURE	86 Deg.F	WMGN@chevron.com 8/29/2023 8:34:01 AM
TE3200 RTD, LUBE OIL HEADER TEMPERATURE	87 Deg.F	WMGN@chevron.com 8/29/2023 8:34:04 AM
TE2113 RTD, GAS FUEL SUPPLY TEMPERATURE	86 Deg.F	WMGN@chevron.com 8/29/2023 8:34:07 AM
TE1110 RTD, TURBINE AIR INLET TEMPERATURE	87 Deg.F	WMGN@chevron.com 8/29/2023 8:34:12 AM
TE6110 RTD, ENCLOSURE TEMPERATURE	90 Deg.F	WMGN@chevron.com 8/29/2023 8:34:16 AM
TE4230 RTD, GENERATOR BEARING DRIVEN END	90 Deg.F	WMGN@chevron.com 8/29/2023 8:34:20 AM
TE4240 RTD, GENERATOR BEARING EXCITER END	90 Deg.F	WMGN@chevron.com 8/29/2023 8:34:38 AM
TE4210 RTD, GENERATOR WINDING PHASE A	95 Deg.F	WMGN@chevron.com 8/29/2023 8:34:43 AM
TE4213 RTD, GENERATOR WINDING PHASE B	98 Deg.F	WMGN@chevron.com 8/29/2023 8:34:46 AM
TE4216 RTD, GENERATOR WINDING PHASE C	98 Deg.F	WMGN@chevron.com 8/29/2023 8:34:49 AM

SHUTDOWN TASK - CHECK AND INSPECT TC SENSOR

Item	Response	Completion
TE1150 THERMOCOUPLE, T5 TEMPERATURE INPUT	88 DegF	WMGN@chevron.com 8/29/2023 8:35:40 AM
TE1151 THERMOCOUPLE, T5 TEMPERATURE INPUT	88 DegF	WMGN@chevron.com 8/29/2023 8:35:42 AM
TE1152 THERMOCOUPLE, T5 TEMPERATURE INPUT	88 DegF	WMGN@chevron.com 8/29/2023 8:35:46 AM
TE1153 THERMOCOUPLE, T5 TEMPERATURE INPUT	88 DegF	WMGN@chevron.com 8/29/2023 8:35:49 AM
TE1154 THERMOCOUPLE, T5 TEMPERATURE INPUT	88 DegF	WMGN@chevron.com 8/29/2023 8:35:52 AM
TE1155 THERMOCOUPLE, T5 TEMPERATURE INPUT	88 DegF	WMGN@chevron.com 8/29/2023 8:35:54 AM

SHUTDOWN TASK - CHECK AND CALIBRATE VIBRATION SYSTEM

Item	Response	Completion
VE4230 DISPLACEMENT PROBE, GENERATOR BEARING DRIVEN END (X-AXIS)	-8.5 VOLT	WMGN@chevron.com 8/29/2023 8:39:56 AM
VE4231 DISPLACEMENT PROBE, GENERATOR BEARING DRIVEN END (Y-AXIS)	-9.0 VOLT	WMGN@chevron.com 8/29/2023 8:40:07 AM
VE4240 DISPLACEMENT PROBE, GENERATOR BEARING EXCITER END (X-AXIS)	-8.7 VOLT	WMGN@chevron.com 8/29/2023 8:40:17 AM
VE4241 DISPLACEMENT PROBE, GENERATOR BEARING EXCITER END (Y-AXIS)	-7.0 VOLT	WMGN@chevron.com 8/29/2023 8:40:22 AM
VE4765 ACCELEROMETER PROBE,	-7.7 VOLT	WMGN@chevron.com

GEARBOX	8/29/2023 8:40:26 AM

SHUTDOWN TASK - CHECK AND INSPECTION SOLENOID VALVE

Item	Response	Completion
SV2120 PILOT, PRIMARY FUEL SHUT-OFF VALVE	101 Ohm	WMGN@chevron.com 8/29/2023 8:40:50 AM
SV2121 GAS VENT SHUT-OFF VALVE	104 Ohm	WMGN@chevron.com 8/29/2023 8:40:53 AM
SV2124 PILOT, SECONDARY FUEL SHUT-OFF VALVE	178 Ohm	WMGN@chevron.com 8/29/2023 8:40:56 AM
SV2641 GAS MANIFOLD PURGE VALVE #1	80 Ohm	WMGN@chevron.com 8/29/2023 8:41:01 AM
SV2642 GAS MANIFOLD PURGE VALVE #2	80 Ohm	WMGN@chevron.com 8/29/2023 8:41:04 AM
SV2224 SOLENOID, LIQUID FUEL BYPASS VALVE	104 Ohm	WMGN@chevron.com 8/29/2023 8:41:11 AM
SV2260 SOLENOID, LIQUID FUEL PURGE VALVE	99 Ohm	WMGN@chevron.com 8/29/2023 8:41:15 AM
SV2222 SOLENOID, SECONDARY LIQUID FUEL SHUTOFF	177	WMGN@chevron.com 8/29/2023 8:41:20 AM
SV2250 LIQUID FUEL TORCH SHUT-OFF	103 Ohm	WMGN@chevron.com 8/29/2023 8:41:24 AM
SV2220 PILOT, LIQUID FUEL SHUT-OFF	101 Ohm	WMGN@chevron.com 8/29/2023 8:41:27 AM
SV6430 AIR ASSIST SHUT-OFF	103 Ohm	WMGN@chevron.com 8/29/2023 8:41:34 AM
SV1720 ON-CRANK CLEANING SHUT-OFF	56 Ohm	WMGN@chevron.com 8/29/2023 8:41:37 AM
SV1710 PILOT, ON-LINE CLEANING SHUT-OFF VALVE	64 Ohm	WMGN@chevron.com 8/29/2023 8:41:42 AM

SHUTDOWN TASK - CHECK AND FUNCTION TEST SPEED SENSOR

Item	Response	Completion
CHECK AND RECORD IMPEDANCE / VOLTAGE OF SPEED MAGNETIC PICKUP	IMPEDANCE(OHM): 608 VOLTAGE(VOLT): 0.3	WMGN@chevron.com 9/1/2023 3:56:38 PM
SIMULATE FREQUNCY @ 10% SPEED SENSOR (996.7 Hz)	10 RPM	WMGN@chevron.com 9/1/2023 3:52:05 PM
SIMULATE FREQUNCY @ 105% SPEED SENSOR (10465 Hz)	105 RPM	WMGN@chevron.com 9/1/2023 3:52:24 PM
SIMULATE FREQUNCY @ 108% SPEED SENSOR (10765 Hz)	108 RPM	WMGN@chevron.com 9/1/2023 3:52:27 PM
SIMULATE FREQUNCY @ 15% BACK-UP OVERSPEED SENSOR (1308 Hz)	15 RPM	WMGN@chevron.com 9/1/2023 3:52:30 PM
SIMULATE FREQUNCY @ 110% BACK-UP OVERSPEED SENSOR (9561 Hz)	110 RPM	WMGN@chevron.com 9/1/2023 3:52:34 PM

SHUTDOWN TASK - CHECK AND CALIBRATE HEAT DETECTION SYSTEM

Item	Response	Completion
TS6540 SWITCH, FIRE SYSTEM THERMAL DETECTOR (Turbine) SET 325 Deg.F	Pass/Fail: **Pass**	WMGN@chevron.com 9/1/2023 3:52:37 PM
TS6541 SWITCH, FIRE SYSTEM THERMAL DETECTOR (Turbine) SET 325 Deg.F	Pass/Fail: **Pass**	WMGN@chevron.com 9/1/2023 3:52:39 PM
TS6542 SWITCH, FIRE SYSTEM THERMAL DETECTOR (DRIVE AFT) SET 325 Deg.F	Pass/Fail: **Pass**	WMGN@chevron.com 9/1/2023 3:52:43 PM

SHUTDOWN TASK - CHECK AND CALIBRATE FLAME DETECTION SYSTEM

Item	Response	Completion
CLEAN UV/IR FLAME DETECTOR SENSOR LENS	Yes	WMGN@chevron.com 9/1/2023 3:52:46 PM
DTF6510 DETECTOR, FIRE SYSTEM (LUBE OIL MODULE)	Pass/Fail: **Pass**	WMGN@chevron.com 9/1/2023 3:52:48 PM
DTF6511 DETECTOR, FIRE SYSTEM (FUEL RING RIGHT HAND SIDE)	Pass/Fail: **Pass**	WMGN@chevron.com 9/1/2023 3:52:51 PM
DTF6512 DETECTOR, FIRE SYSTEM (FUEL RING LEFT HAND SIDE)	Pass/Fail: **Pass**	WMGN@chevron.com 9/1/2023 3:52:54 PM

SHUTDOWN TASK - CHECK AND CALIBRATE GAS DETECTION SYSTEM

Item	Response	Completion
DTG6561 SENSOR, GAS DETECTION (ENCLOSURE AIR INLET)(H 10, HH 25 %LEL)	Pass/Fail: **Pass**	WMGN@chevron.com 9/1/2023 3:53:09 PM

DTG6571 SENSOR, GAS DETECTION (FUEL GAS AREA #1)(H 10, HH 25 %LEL)	Pass/Fail: **Pass**	WMGN@chevron.com 9/1/2023 3:53:11 PM
DTG6572 SENSOR, GAS DETECTION (FUEL GAS AREA #2)(H 10, HH 25 %LEL)	Pass/Fail: **Pass**	WMGN@chevron.com 9/1/2023 3:53:19 PM
DTG6581 SENSOR, GAS DETECTION (ENCLOSURE EXHAUST)(H 10, HH 25 %LEL)	Pass/Fail: **Pass**	WMGN@chevron.com 9/1/2023 3:53:21 PM
DTG6567 SENSOR, GAS DETECTION, (TURBINE AIR INLET)(H 10, HH 25 %LEL)	Pass/Fail: **Pass**	WMGN@chevron.com 9/1/2023 3:53:58 PM

SHUTDOWN TASK - FIRE SUPPRESSION CO2 SYSTEM

Item	Response	Completion
PS6610 CO2 COMMON RELEASE CONFIRM SWITCH	Pass/Fail: **Pass**	WMGN@chevron.com 9/1/2023 3:54:01 PM
SV6611 CO2 CYLINDER SOLENOID VALVE	Pass/Fail: **Pass**	WMGN@chevron.com 9/1/2023 3:54:04 PM
SV6612 EXTENDED CO2 CYLINDER SOLENOID VALVE	Pass/Fail: **Pass**	WMGN@chevron.com 9/1/2023 3:54:07 PM
REMOVE TO RECHARGE WHEN FIND CO2 CYL. GROSS WEIGHT LOSTS MORE THAN 10% OF STAMPED AND RECORDS (LBS.) AND REPLACE CYL WHICH SERVICES OVER 12 YRS TO MAINTENANCE AND HYDRO TEST.	Yes	WMGN@chevron.com 9/1/2023 3:54:10 PM
MAIN CYLINDER#1 WEIGHT	295 LBS	WMGN@chevron.com 9/1/2023 3:54:39 PM
MAIN CYLINDER#2 WEIGHT	290 LBS	WMGN@chevron.com 9/1/2023 3:54:49 PM
MAIN CYLINDER#3 WEIGHT	227 LBS	WMGN@chevron.com 9/1/2023 3:55:04 PM
MAIN CYLINDER#4 WEIGHT	226 LBS	WMGN@chevron.com 9/1/2023 3:55:11 PM

SHUTDOWN TASK - ELECTRICAL SYSTEM

Item	Response	Completion
CHECK BATTERY CHARGER FOR PROPER OPERATION.	Yes	WMGN@chevron.com 9/1/2023 3:55:15 PM
FLOAT CHARGE MODE	VOLTAGE(V): 28.9 CURRENT(A): 0.7	WMGN@chevron.com 9/1/2023 3:55:37 PM
HIGH RATE CHARGE CURRENT	VOLTAGE(V): 32 CURRENT(A): 4.5	WMGN@chevron.com 9/1/2023 3:55:45 PM
CHECK BATTERY BANK VOLTAGE	28.4 V	WMGN@chevron.com 9/1/2023 3:55:55 PM
MEASURE STARTER MOTOR INSULATION RESISTANCE (VFD)	T1: 550 M-ohm T2: 550 M-ohm T3: 550 M-ohm	WMGN@chevron.com 8/30/2023 8:12:32 AM
MEASURE LUBE OIL COOLER MOTOR #1 INSULATION RESISTANCE	T1: 550 M-ohm T2: 550 M-ohm T3: 550 M-ohm	WMGN@chevron.com 8/30/2023 8:12:42 AM
MEASURE LUBE OIL COOLER MOTOR #2 INSULATION RESISTANCE	T1: 550 M-ohm T2: 550 M-ohm T3: 550 M-ohm	WMGN@chevron.com 8/30/2023 8:13:04 AM
MEASURE LUBE OIL COOLER MOTOR #3 INSULATION RESISTANCE	T1: 550 M-ohm T2: 550 M-ohm T3: 550 M-ohm	WMGN@chevron.com 8/30/2023 8:13:18 AM
MEASURE ENCLOSURE VENT FAN MOTOR#1 INSULATION RESISTANCE	T1: 550 M-ohm T2: 550 M-ohm T3: 550 M-ohm	WMGN@chevron.com 8/30/2023 8:13:40 AM
MEASURE ENCLOSURE VENT FAN MOTOR#2 INSULATION RESISTANCE	T1: 550 M-ohm T2: 550 M-ohm T3: 550 M-ohm	WMGN@chevron.com 8/30/2023 8:14:48 AM
MEASURE PRE/POST LUBE OIL PUMP MOTOR (AC) INSULATION RESISTANCE	T1: 550 M-ohm T2: 550 M-ohm T3: 550 M-ohm	WMGN@chevron.com 8/30/2023 8:15:06 AM
MEASURE PRE/POST LUBE OIL PUMP MOTOR (DC) INSULATION RESISTANCE	50 M-ohm	WMGN@chevron.com 8/30/2023 8:15:17 AM
MEASURE LIQUID FUEL BOOSTER PUMP MOTOR INSULATION RESISTANCE	T1: 550 M-ohm T2: 550 M-ohm T3: 550 M-ohm	WMGN@chevron.com 8/30/2023 8:15:49 AM
MEASURE LIQUID FUEL MAIN PUMP MOTOR INSULATION RESISTANCE	T1: 550 M-ohm T2: 550 M-ohm T3: 550 M-ohm	WMGN@chevron.com 8/30/2023 8:16:06 AM
MEASURE GENERATOR INSULATION RESISTANCE	T1: 189.7 M-ohm T2: 189.7 M-ohm T3: 189.7 M-ohm	WMGN@chevron.com 9/1/2023 4:05:27 PM

Comments/Recommendations:
PMG = As found 0.3 Ohm / As left 52.5 M Ohm / 0.6 Ohm Exciter = 40.2 M Ohm/ 28.6 Ohm

MEASURE GENERATOR POLARIZATION	T1: 189.7 M-ohm	WMGN@chevron.com

INDEX TEST	T2: 189.7 M-ohm T3: 189.7 M-ohm	8/29/2023 2:49:46 PM

START AND TEST RUN UNIT

Item	Response	Completion
MEASURE STARTER MOTOR RUNNING CURRENT (VFD)	A1: 104 A A2: 104 A A3: 104 A	WMGN@chevron.com 9/1/2023 3:57:02 PM
MEASURE LUBE OIL COOLER MOTOR #1 RUNNING CURRENT	A1: 4.4 A A2: 3.9 A A3: 4.6 A	WMGN@chevron.com 9/1/2023 3:57:37 PM
MEASURE LUBE OIL COOLER MOTOR #2 RUNNING CURRENT	A1: 4.8 A A2: 4.3 A A3: 4.8 A	WMGN@chevron.com 9/1/2023 3:57:49 PM
MEASURE LUBE OIL COOLER MOTOR #3 RUNNING CURRENT	A1: 4.5 A A2: 4.3 A A3: 4.6 A	WMGN@chevron.com 9/1/2023 3:58:00 PM
MEASURE ENCLOSURE VENT FAN MOTOR#1 RUNNING CURRENT	A1: 21.4 A A2: 21.9 A A3: 22.8 A	WMGN@chevron.com 9/1/2023 3:58:15 PM
MEASURE ENCLOSURE VENT FAN MOTOR#2 RUNNING CURRENT	A1: 21.8 A A2: 22.3 A A3: 22.8 A	WMGN@chevron.com 9/1/2023 3:58:26 PM
MEASURE PRE/POST LUBE OIL PUMP MOTOR (AC) RUNNING CURRENT	A1: 2.0 A A2: 2.2 A A3: 2.3 A	WMGN@chevron.com 9/1/2023 3:58:38 PM
MEASURE PRE/POST LUBE OIL PUMP MOTOR (DC) RUNNING CURRENT	36 A	WMGN@chevron.com 9/1/2023 3:58:43 PM
MEASURE LIQUID FUEL BOOSTER PUMP MOTOR RUNNING CURRENT	A1: 1.2 A A2: 1.1 A A3: 1.2 A	WMGN@chevron.com 9/1/2023 3:58:52 PM
MEASURE LIQUID FUEL MAIN PUMP MOTOR RUNNING CURRENT	A1: 4.9 A A2: 4.6 A A3: 4.8 A	WMGN@chevron.com 9/1/2023 3:59:14 PM

FINAL CHECK

Item	Response	Completion
RECHECK ALL ACCESSIBLE INSTRUMENT SYSTEMS FOR SIGN OF BURNT OR LOOSE CONNECTION	Yes	WMGN@chevron.com 9/1/2023 4:00:04 PM
RE-INSTALL DISCHARGE SOLENOIDS ONTO CO2 CYLINDER HEADS, REMOVE FORCE AND SIGN OFF ISOLATION LOG AND RETURN TO NORMAL OPERATION	Yes	WMGN@chevron.com 9/1/2023 4:00:04 PM
SIGN OFF WORK PERMIT AND CLOSE PM WORK ORDER	Yes	WMGN@chevron.com 9/1/2023 4:00:05 PM

©2023, rev. 3.1.0.0

Inspection Report

Work Order Details

Inspection Type
Gen-Turbine-Mech (THA)

Work Order #
1212814-BEMECHROV

Description
8K SOLAR TURBINE GEN1-BLQ-ITPM

Scheduled Date
09/20/2023

Status
65 - Completed Ready for Review

Local Code 11
C40

Local Code 13
ITP

Service Type
MH4400

Work Center
BEMECHROV

Branch Plant
3800BLQNTA

Fields
BENCHAMAS

Platform Tag
BENCHAMAS

ECA Ranking
3

PM Status
99

PM Description
8K SOLAR TURBINE GEN1-BLQ-ITPM

SD Category
UO

Plan Date
7/30/2023 12:00:00 AM

Equipment Details

Equipment #
BELQ-ZAN-Q7801B

Description
8K SOLAR TURBINE GEN1-BLQ-ITPM

Parent #
BELQ-GP

Area
BENCHAMAS

Equipment Class
EG - Electric Generator

Assignment and Status

Completed by
[redacted]

Completed on
9/2/2023 7:51:20 AM

Status
Completed

Approved by
[redacted]

Approved on
Thursday, January 09, 2025 13:30:31

Inspection Summary

Completed by: Chana S., Kritsadakorn C., Worawat S., Wanchai M., Nakorn S and Core team

Reviewer Summary

The equipment is accurate and in normal condition.

Equipment Details

Field Name	Original Value	New Value

Inspection Items

General

Item	Response	Completion
SELECT LOCATION	BENCHAMAS	Worawat.Sungkawet@chevron.com 9/2/2023 7:14:20 AM
SELECT MAINTENANCE INTERVAL	8K	Worawat.Sungkawet@chevron.com 9/2/2023 7:14:23 AM

PRE-REQUISITE TASKS

Item	Response	Completion
-TOOL BOX MEETING AND HA/JSA DISCUSSION (ADDITION OR REVISE IF REQUIRE) -COORDINATE WITH PRODUCTION TO MAKE EQUIPMENT AVAILABLE FOR INSPECTION -VISUALLY INSPECT ALL ACCESSIBLE PARTS FOR	Yes	Worawat.Sungkawet@chevron.com 9/2/2023 7:14:27 AM

LEAKS, LOOSE CONNECTIONS AND FITTINGS AND NON STANDARD CONDITIONS

PRE-SHUTDOWN TASK

Item	Response	Completion
REVIEW EFFICIENCY AND PERFORMANCE DATA	Yes	Worawat.Sungkawet@chevron.com 9/2/2023 7:14:39 AM
REVIEW VIBRATION SURVEY AND RECORD TRADING FOR ENGINE AND BEARING CONDITION	Yes	Worawat.Sungkawet@chevron.com 9/2/2023 7:15:14 AM
REVIEW BORE SCOPE RECORDS FOR ANY DISTRESS, BURNT AND CRACKS FROM PREVIOUS RECORDS	Yes	Worawat.Sungkawet@chevron.com 9/2/2023 7:15:07 AM
BEFORE SHUTDOWNTHE UNIT, A WALKAROUND INSPECTION IS RECOMMENDED TO ENSURE EQUIPMENT IS FUNCTIONING PROPERLY AND DETECT LEAKS OR OBVIOUS FAULTS	Yes	Worawat.Sungkawet@chevron.com 9/2/2023 7:15:33 AM
Comments/Recommendations: unit offline		
TAKE READING AND RECORD ENGINE SPEED, PCD AND TEMPERATURE TO EVALUATE RESULTS AGAINST BASELINE DATA	Yes	Worawat.Sungkawet@chevron.com 9/2/2023 7:15:58 AM
Comments/Recommendations: unit offline		
ASSIST MECH/IE TECH.TO SHUTDOWN ENGINE ON ONE OF SAFETY DEVICES	Yes	Worawat.Sungkawet@chevron.com 9/2/2023 7:16:11 AM
Comments/Recommendations: unit offline		

SHUTDOWN TASK

Item	Response	Completion
LOG OUT/TAG OUT AND DEPRESSURIZE SHUT OFF GAS FUEL SUPPLY AND STARTING GAS VALVES	Yes	Worawat.Sungkawet@chevron.com 9/2/2023 7:16:18 AM
LOCK OUT PRE/POST AND BACKUP LUBE OIL PUMPS	Yes	Worawat.Sungkawet@chevron.com 9/2/2023 7:16:23 AM
LOCK OUT LUBE OIL COOLER AND ENCLOSURE VENT FANS	Yes	Worawat.Sungkawet@chevron.com 9/2/2023 7:16:25 AM
LOCK OUT FIRE PROTECTION/CO2 SYSTEM	Yes	Worawat.Sungkawet@chevron.com 9/2/2023 7:16:28 AM
VISUALLY INSPECT ALL ACCESSIBLE PARTS FOR FUEL AND OIL LEAKS, CRACK, LOOSE CONNECTIONS OF FITTINGS, EXCESSIVE VRIBRATION, NOISE, AND NON STANDARD CONDITIONS	Yes	Worawat.Sungkawet@chevron.com 9/2/2023 7:16:31 AM

START SYSTEMS TASK

Item	Response	Completion
INSPECT STARTER CLUTCH, IF APPLICABLE, TO ENSURE LOCK-UP IN ONE DIRECTION AND FREE ROTATION IN THE OTHER	Yes	Worawat.Sungkawet@chevron.com 9/2/2023 7:16:37 AM
CHECK STARTER ASSEMBLY FOR UNUSUAL WEAR, LOOSENESS AND LEAKAGE	Yes	Worawat.Sungkawet@chevron.com 9/2/2023 7:16:39 AM
VERIFY PROPER OPERATION OF VFD WHEN UNIT IS RESTARTED	Yes	Worawat.Sungkawet@chevron.com 9/2/2023 7:16:55 AM
INSPECT LUBE OIL LEAKAGE AT STARTER MOTOR FOR LIP SEAL CONDITION	Yes	Worawat.Sungkawet@chevron.com 9/2/2023 7:17:05 AM
RECORD VFD DATA AS VOLTAGE / CURRENT / FREQUENCY AT FULL LOAD	VOLTAGE (VOLTS): 4149 CURRENT (AMPS): 4159 FREQUENCY (HZ): 60	Worawat.Sungkawet@chevron.com 9/2/2023 7:49:44 AM

FUEL SYSTEM TASK

Item	Response	Completion
REPLACE PILOT GAS SUPPLY FILTER AND O-RING	Yes	Worawat.Sungkawet@chevron.com 9/2/2023 7:17:31 AM
CLEANE UP FUEL GAS INLET STRAINER	Yes	Worawat.Sungkawet@chevron.com 9/2/2023 7:17:33 AM
REPLACE O-RING VALVE PILOT CONTROL	Yes	Worawat.Sungkawet@chevron.com 9/2/2023 7:17:35 AM
REPLACE PRIMARY FUEL FILTER OF	Yes	Worawat.Sungkawet@chevron.com

LIQUID BOOST PUMP		9/2/2023 7:17:38 AM
REPLACE SECONDARY FUEL FILTER OF LIQUID BOOST PUMP	Yes	Worawat.Sungkawet@chevron.com 9/2/2023 7:17:40 AM

LUBE OIL SYSTEMS TASK

Item	Response	Completion
CHECK PRE-POST LUBE OIL PUMP/BACKUP PRE-POST LUBE OIL PUMP FOR ANY DEFECTS LEAKS, DAMAGE PIPE WORKS, LOOSE CONNECTIONS AND FITTINGS	Yes	Worawat.Sungkawet@chevron.com 9/2/2023 7:18:07 AM
CHANGE MAIN LUBE OIL FILTER	Yes	Worawat.Sungkawet@chevron.com 9/2/2023 7:18:10 AM
CHANGE HYDRAULIC OIL FILTER	Yes	Worawat.Sungkawet@chevron.com 9/2/2023 7:18:13 AM
CHANGE LUBE OIL FILTER HOUSING COVER O-RING	Yes	Worawat.Sungkawet@chevron.com 9/2/2023 7:18:17 AM
REMOVE LUBE OIL PCV (BACK PRESSUR REGULATOR) REMARK : TO INSPECT AND ADJUST TO 55 PSIG, REPLACE IF REQUIRED	Yes	Worawat.Sungkawet@chevron.com 9/2/2023 7:18:31 AM
INSPECT LUBE OIL COOLER FAN BLADE FOR ANY DEFECTS AND CORRECT	Yes	Worawat.Sungkawet@chevron.com 9/2/2023 7:18:37 AM
INSPECT OIL COOLER CORE, PIPE AND HOSE FOR LEAK, DAMAGE OR CORROSION	Yes	Worawat.Sungkawet@chevron.com 9/2/2023 7:18:42 AM
CHECK LUBE OIL COOLER HOLD DOWN BOLT TIGHTNESS	Yes	Worawat.Sungkawet@chevron.com 9/2/2023 7:18:44 AM
CHECK LUBE OIL RESERVOIR LEVEL AND TOP UP LUBE OIL SHELL TURBO T-32 **Comments/Recommendations:** refill 200 liters	Yes	Worawat.Sungkawet@chevron.com 9/2/2023 7:19:04 AM
CHECK BACK PRESSURE OF LUBE OIL RESERVOIR TO EVALUATE BLOCKAGE OF FLAME ARRESTOR/LUBE OIL MIST ELEMINATOR FROM LOG SHEET/LOCAL CONTROL PANEL	Yes	Worawat.Sungkawet@chevron.com 9/2/2023 7:19:10 AM

ENCLOSURE TASK

Item	Response	Completion
REPLACE PRIMARY AIR INLET FILTERS	Yes	Worawat.Sungkawet@chevron.com 9/2/2023 7:19:17 AM
REPLACE SECONDARY AIR INLET FILTERS	Not Applicable	Worawat.Sungkawet@chevron.com 9/2/2023 7:19:29 AM
INSPECT AIR INLET FILTER HOUSING FOR DAMAGE, LEAK, LOOSE OBJECT, CORROSION CLEAN UP FILTER HOUSING	Yes	Worawat.Sungkawet@chevron.com 9/2/2023 7:19:34 AM
INSPECT WATER LEVEL OF AIR FILTER HOUSING WATER TRAP	Yes	Worawat.Sungkawet@chevron.com 9/2/2023 7:19:38 AM
CHECK FLAME ARRESTOR BACK PRESSURE OF LUBE OIL RESERVOIR TO EVALUATE BLOCKAGE OF FLAME ARRESTOR/LUBE OIL MIST ELEMINATOR FROM LOG SHEET/LOCAL CONTROL PANEL	Yes	Worawat.Sungkawet@chevron.com 9/2/2023 7:19:42 AM
VISALLY INSPECT AIR TRANSITION DUCT FOR CRACKS OR DISTORTION	Yes	Worawat.Sungkawet@chevron.com 9/2/2023 7:19:46 AM

AIR SYSTEM

Item	Response	Completion
CHECK INLET GUIDE VANE FOR PROPER POSITION ON FULLY OPEN & CLOSE	Yes	Worawat.Sungkawet@chevron.com 9/2/2023 7:19:51 AM
CHECK ACTUATOR CYLINDER LINKAGE	Yes	Worawat.Sungkawet@chevron.com 9/2/2023 7:19:54 AM
INSPECT ENGINE COMP. VARIABLE VANE MECHANISM FOR WEAR BUSHING, BENT ARM, LOOSE LINKAGE, ENSURE STOP SETTING IS CORRECTED	Yes	Worawat.Sungkawet@chevron.com 9/2/2023 7:19:59 AM
INSPECT BLEED VALVE FOR SRING CONDITION, GASKET	Yes	Worawat.Sungkawet@chevron.com 9/2/2023 7:20:26 AM
Comments/Recommendations: visual inspection		
CHECK FOR LOOSE OR DAMAGE SIGNAL WIRE TO ACTUATOR IF APPLICABLE	Yes	Worawat.Sungkawet@chevron.com 9/2/2023 7:20:33 AM
INSPECT BLEED VALVE AND RECORD FUNCTION TEST OPEN/CLOSE	OPEN: 0 PSIG CLOSE: 0 PSIG	Worawat.Sungkawet@chevron.com 9/2/2023 7:25:50 AM

Comments/Recommendations:
visual check

RECORD BLEED VALVE TRAVELLING TIME OPEN/CLOSE	OPEN: 0 Sec. CLOSE: 0 Sec.	Worawat.Sungkawet@chevron.com 9/2/2023 7:26:28 AM

Comments/Recommendations:
visual check

TURBINE ENGINE TASK

Item	Response	Completion
DISASSEMBLE, CLEAN AND INSPECT DRAIN VALVE, CHECK CONDITION AND FUNCTION TEST	Yes	Worawat.Sungkawet@chevron.com 9/2/2023 7:21:03 AM
PERFORM BORESCOPE INSPECTIONS FOR INTERNAL PART OF HOT SECTIONS AND TURBINE COMPRESSOR	Yes	Worawat.Sungkawet@chevron.com 9/2/2023 7:21:05 AM
VISALLY INSPECT EXHAUST COLLECTOR/EXHAUST EXPANSION JOINT FOR CRACKS OR DISTORTION	Yes	Worawat.Sungkawet@chevron.com 9/2/2023 7:21:10 AM
REPLACE SPARK PLUG AND ADJUSTING GAP SPARK PLUG AS SPECIFICATION	Yes	Worawat.Sungkawet@chevron.com 9/2/2023 7:21:12 AM

GAS FUEL MANIFOLD TASK

Item	Response	Completion
REMOVE FUEL INJECTORS AND TORCH IGNITER. INSPECT FOR CARBON BUILDUP, DISTORTION, BURNING, CRACK AND WEAR, CLEAN AND REPLACE WITH NEW O-RINGS AND GASKETS. NOTE: MARK THE LOCATION OF EACH FUEL INJECTOR BEFORE REMOVAL. INSTALL FUEL INJECTOR DAMMY TO SUPPORT COMBUSTORS PERFORM BORE SCOPE BEFORE RE-INSTALL FUEL INJECTORS.	Yes	Worawat.Sungkawet@chevron.com 9/2/2023 7:21:18 AM

GEAR UNIT TASK

Item	Response	Completion
CHECK GEARBOX HOUSING FOR ANY OIL LEAKAGE, REPAIR IF NECESSARY	Yes	Worawat.Sungkawet@chevron.com 9/2/2023 7:21:26 AM
OPEN GEARBOX COVER AND VISUAL INSPECT GEAR TEETH CONDITON	Yes	Worawat.Sungkawet@chevron.com 9/2/2023 7:21:29 AM
CHECK HOLD DOWN BOLTS FOR LOOSEN AND TIGHTNESS	Yes	Worawat.Sungkawet@chevron.com 9/2/2023 7:21:31 AM

DRIVEN EQUIMENT TASK

Item	Response	Completion
CHECK AND INSPECT DRIVEN COUPLING TO GENERATOR, CHECK FOR TIGHTNESS OF BOLTS AND NUTS RE-TORQUE AS SPECIFICATION	12000 LB-inch	Worawat.Sungkawet@chevron.com 9/2/2023 7:21:47 AM
CHECK HOLD DOWN BOLTS OF GENERATOR TIGHTNESS AND TORQUE AS SPECIFICATION	5520 LB-inch	Worawat.Sungkawet@chevron.com 9/2/2023 7:22:08 AM

ENGINE CRANK SOAK WASH TASK

Item	Response	Completion
AFTER ENGINE SHUTDOWN FOR AT LEAST 30 MINUTES TO ALLOW ENGINE TO COOLDOWN, PERFORM ENGINE WASH USING APPROVE FLUID	Yes	Worawat.Sungkawet@chevron.com 9/2/2023 7:22:22 AM
REMOVE DRAIN LINES OF ENGINE PRIOR ENGINE WASH	Yes	Worawat.Sungkawet@chevron.com 9/2/2023 7:22:29 AM
ALLOW SOAKING SETTLE FOR 15 MINUTES AND THEN CRANK ENGINE ENSURE THAT FLUID WASTE FROM ENGINE DRAINS IS CLEAN, IF NOT REPEAT ENGINE WASH AGAIN UNIT FLUID IS CLEAN	Yes	Worawat.Sungkawet@chevron.com 9/2/2023 7:22:31 AM
APPROXIMATELY 15 TO 30 MINUTES AFTER COMPLETION OF CRANK WASH A WATER RINSE IS RECOMMENDED	Yes	Worawat.Sungkawet@chevron.com 9/2/2023 7:22:33 AM
SPIN DRY FOR ONE TIME AFTER WASHING	Yes	Worawat.Sungkawet@chevron.com 9/2/2023 7:22:39 AM
RE-INSTALL DRAIN LINE OF ENGINE AFTER WASHED. NOTE: TO ACCURATELY MEASURE THE PERFORMANCE OF THE COMPRESSOR CLEANING SYSTEM AND DETERMINE NECESSARY CHANGES TO CLEANING FREQUENCY AND DOSAGE, THE ENGINE OPERATING PARAMETERS	Yes	Worawat.Sungkawet@chevron.com 9/2/2023 7:22:42 AM

SHOULD BE RECORDED PRIOR TO AND FOLLOWING EACH CLEANING.		

FINAL CHECK

Item	Response	Completion
COORDINATE WITH OPERATIONS/OTHER CRAFTS TO START ENGINE	Yes	Worawat.Sungkawet@chevron.com 9/2/2023 7:22:48 AM
VISUALLY INSPECT ALL ACCESSIBLE PARTS FOR GAS FUEL AND LUBE OIL LEAKS, EXCESSIVE VIBRATION AND NOISE, LOOSE CONNECTIONS AND FITTINGS	Yes	Worawat.Sungkawet@chevron.com 9/2/2023 7:22:54 AM
TAKE READINGS AND RECORD ENGINE PARAMETER: ENGINE HOURS	27414 HRS.	Worawat.Sungkawet@chevron.com 9/2/2023 7:23:20 AM
TAKE READINGS AND RECORD ENGINE PARAMETER: PCD	92 PSIG	Worawat.Sungkawet@chevron.com 9/2/2023 7:23:25 AM
TAKE READINGS AND RECORD ENGINE PARAMETER: NGP (%)	100 %	Worawat.Sungkawet@chevron.com 9/2/2023 7:23:33 AM
TAKE READINGS AND RECORD ENGINE PARAMETER: NPT (%)	0 %	Worawat.Sungkawet@chevron.com 9/2/2023 7:42:04 AM
Comments/Recommendations: N/A		
TAKE READINGS AND RECORD ENGINE PARAMETER: T1 AIR INLET TEMPERATURE	86 F	Worawat.Sungkawet@chevron.com 9/2/2023 7:24:40 AM
TAKE READINGS AND RECORD ENGINE PARAMETER: T5 AVG TEMPERATURE	575 F	Worawat.Sungkawet@chevron.com 9/2/2023 7:24:46 AM
TAKE READINGS AND RECORD LUBE OIL SYSTEM PARAMETER: LUBE OIL PRESSURE	63 PSIG	Worawat.Sungkawet@chevron.com 9/2/2023 7:28:45 AM
TAKE READINGS AND RECORD LUBE OIL SYSTEM PARAMETER: LUBE OIL HEADER TEMPERATURE	139 F	Worawat.Sungkawet@chevron.com 9/2/2023 7:29:05 AM
TAKE READINGS AND RECORD LUBE OIL SYSTEM PARAMETER: LUBE OIL TANK TEMPERATURE	158 F	Worawat.Sungkawet@chevron.com 9/2/2023 7:30:20 AM
TAKE READINGS AND RECORD LUBE OIL SYSTEM PARAMETER: LUBE OIL COOLER INLET TEMPERATURE	Not Applicable F	Worawat.Sungkawet@chevron.com 9/2/2023 7:30:26 AM
TAKE READINGS AND RECORD LUBE OIL SYSTEM PARAMETER: LUBE OIL COOLER EXIT TEMPERATURE	Not Applicable F	Worawat.Sungkawet@chevron.com 9/2/2023 7:30:39 AM
TAKE READINGS AND RECORD VIBRATION DATA: GP (IN/S)	0.095 Inch/Sec	Worawat.Sungkawet@chevron.com 9/2/2023 7:41:32 AM
TAKE READINGS AND RECORD VIBRATION DATA: GEARBOX FWD (M/S2)	0.400 m/Sec2	Worawat.Sungkawet@chevron.com 9/2/2023 7:41:40 AM
CONDUCT LIQUID FUEL TRANSFER MODE DURING OPERATION. OBSERVE SPEED, TEMPERATURE,AND LOAD READINGS FOR EXCESSIVE TRANSIENTS	Yes	Worawat.Sungkawet@chevron.com 9/2/2023 7:31:05 AM
TAKE READINGS AND RECORD VIBRATION DATA: GEARBOX AFT (M/S2).	0.400 m/Sec2	Worawat.Sungkawet@chevron.com 9/2/2023 7:50:51 AM
TAKE READINGS AND RECORD ENGINE PARAMETER: AIR INLET DP	3.1 H2O PSIG	Worawat.Sungkawet@chevron.com 9/2/2023 7:32:22 AM

JOB COMPLETION

Item	Response	Completion
-RECHECK ALL ACCESSIBLE SYSTEM FOR DAMAGE, FAULTS, LEAKS, LOOSE OR BROKEN CONNECTION -RETURN UNIT TO NORMAL OPERATION -ENSURE THE EQUIPMENT IS LEFT IN A SAFE CONDITION AND THE AREA LEFT TIDY -SIGN OFF THE WORK PERMIT AND RETURN IT TO THE AREA AUTHORITY	Yes	Worawat.Sungkawet@chevron.com 9/2/2023 7:32:29 AM

©2023, rev. 3.1.0.0

WO# 1247351 (IE)

Chevron

BENCHAMAS BEWB - PM

Revision	Date	Reason for Issue/Change	CMOR #	Enter by
1	21-Dec-18	New Instalation	????/??	[redacted]
2	05-Feb-24	Revise jobcard for add IE	013/24	

JOBCARD NUMBER: 1Y GAS GENERATOR 350KW SKID BEWB - PM

SKID/EQUIPMENT: BEWB-ZAN-B7020 GAS ENGINE GENERATOR 350KW SKID.

OPT. SEQUENCE: 10 BEWB-ZAN-B7020 GAS ENGINE GENERATOR 350KW SKID PM-IE

WORK CENTER: BENIE

CREW SIZE	DURATION	EST.MAN-HRS	RESOURCE DESCRIPTIONS
2	36	72	I/E TECH BENCHAMAS

EQUIPMENT CRITICALITY: *ECA:* 2 *IC:* N/A

REQUIRED OPERATIONAL STATUS: *PLANT:* ONLINE *EQUIPMENT:* SHUTDOWN

MFGR, INDUSTRY REFERENCES AND ENGINEERING RECOMMENDATION:

- ORIGINAL EQUIPMENT MANUFACTURER, OEM
- API-RP-14C
- P&ID: D-COT-BEN-BWB-10-029

EQUIPMENT UNDER THIS PM TASK:

- BEWB-ZAN-B7020 GAS ENGINE GENERATOR 350KW
- BEWB-GCP-B7020 GAS ENGINE CONTROL PANEL

SPARE PARTS REQUIREMENT:

STOCK	DESCRIPTION	PART NUMBER	QTY	UOM

JOB INSTRUCTIONS

TASKS TO BE CARRIED OUT FOR INSPECT AND MAINTENANCE.

*****Please record the actual running data before stop and after running with loaded. *****

IE TASKS: **COMPLETED (YES) (NO)**

1) PRE-REQUISITE TASKS:

1.1 OBTAIN WORK PERMIT, REVIEW HA/JSA AND CARRY OUT TOOLBOX MEETING. (✓) ( ) REMARKS_____

1.2 COORDINATE WITH PRODUCTION TO MAKE EQUIPMENT AVAILABLE FOR INSPECTION. (✓) ( ) REMARKS_____

1.3 ENSURE ANY REQUIRED LOCK-OUT/TAG OUT ARE INSTALLED. PER THE IHE CERTIFICATE. (✓) ( ) REMARKS_____

2) TASKS TO BE CARRIED OUT WHILE ENGINE IS RUNNING:

2.1 CHECK FOR ANY LEAKS (✓) ( ) REMARK: _____

2.2 CHECK FOR UNUSUAL NOISES (✓) ( ) REMARK: _____

2.3 CHECK FOR EXCESSIVE VIBRATION (✓) ( ) REMARK: _____

2.4 CHECK FOR EXCESSIVE SMOKE (✓) ( ) REMARK: _____

2.5 CHECK FOR GAS FUEL LEAKS (✓) ( ) REMARK: _____

2.6 CHECK FOR ANY OIL OR COOLANT LEAKS (✓) ( ) REMARK: _____

2.7 RECORD NECESSARY DATA BEFORE/AFTER PM (✓) ( ) REMARK: _____

DESCRIPTION	AS FOUND READING (BEFORE PM)	AS LEFT READING (AFTER PM)	REMARK
ENGINE RUN HOURS	14931 hrs.	14931 hrs	
ENGINE OIL PRESSURE	78.2 psi	78-2 psi	
ENGINE OIL TEMPERATURE	153 °F	153 °F	
EINGINE JWTR PRESSURE	25.4 psi	25.4 psi	
ENGINE JWTR TEMPERATURE	165 °F	165 °F	
ENGINE RPM	1800 rpm	1800 rpm	
VOLTAGE L1-2	480 VAC	480 VAC	On load
VOLTAGE L2-3	477 VAC	478 VAC	
VOLTAGE L3-1	477 VAC	477 VAC	
CURRENT L1	109 A	109 A	
CURRENT L2	103	113 A	
CURRENT L3	114 A	114 A	
REAL POWER KW	90 KW	90 KW	
AVG CYL TEMP	1157 °F.	1157 °F	
FUEL GAS PRESSURE	28.1 psi	28-2 psi	

TASKS TO BE CARRIED AFTER ENGINE SHUTDOWN:

3) ENCLOSURE / CONTROL PANEL

3.1 CHECK UNIT FOR SIGNS OF DAMAGE / CORROSION / DIRT (✓) ( ) REMARK: _____
3.2 CHECK GUARDS ARE MISSING OR DAMAGED (✓) ( ) REMARK: _____
3.3 CHECK MCCB WIRING CONNECTIONS (✓) ( ) REMARK: _____
3.4 CHECK MCCB & GFD OPERATION (✓) ( ) REMARK: _____
3.5 CHECK ELECTRICAL ENCLOSURES FOR DAMAGE / WATER / LOOSE OR MISSING BOLTS (✓) ( ) REMARK: _____
3.6 TIGHTEN TERMINAL WIRING CONTROL PANEL (✓) ( ) REMARK: _____
3.7 CHECK CONTROL PANEL LIGHTS / DISPLAY (✓) ( ) REMARK: _____
3.8 CONTROL PANEL INTIGRITY (✓) ( ) REMARK: _____
3.9 CHECK FOR PLC DEVICE NO SIGN OD LOOS ,BURN OR FAULT (✓) ( ) REMARK: _____
3.10 CHECK FOR PLC, IO CARDS,RELAYS AND RELATED DEVICES NO SIGN OF LOSS ,BURN OR FAULT AND TIGHTEN TERMINAL. (✓) ( ) REMARK: _____

4) CHECK GAS STARTER

4.1 LUBRICANT (✓) ( ) REMARK: _____
4.2 CHECK STARTER SOLENOID (✓) ( ) REMARK: _____

5)CHECK ACCURACY / CALIBRATE INSTRUMENTS AND FUNCTION TEST SHUTDOWN DEVICES AS TABLE (✓) ( ) REMARK: _____

TAG	DESCRIPTION	SET POINT				AS FOUND				AS LEFT			
		LL	L	H	HH	LL	L	H	HH	LL	L	H	HH
YGD2970A	ENCLOSURE GAS DETECTOR A	-	-	20	40	-	-	20	40	-	-	—	—
YGD2970B	ENCLOSURE GAS DETECTOR B	-	-	20	40	-	-	19.6	39.	-	-	—	—
VZT5800	RADIATOR VIBRATION IN/SEC	-	-	0.4	0.6	-	-	0.4	0.5	-	-	—	—
VZT5100	ENGINE VIBRATION IN/SEC	-	-	0.3	0.5	-	-	0.3	0.5	-	-	—	—
PZT5101	ENGINE LUBE OIL PRESS	35	40	110	120	35	40	111	121	—	—	—	—
PZT5102	ENGINE AIR MANIFOLD PRESS	-	-	20	25	-	-	20	24.5	-	-	—	—
PZT5103	TURBO OIL PRESS	35	40	110	120	35	40	110	120	—	—	—	—
PZT5104	ENGINE JACKET WATER PRESS	9	10	-	-	9	10.1	-	-	—	—	-	-
PZT5105	ENGINE AUX WATER PRESS	8	9	-	-	8	9.1	-	-	—	—	-	-
PZT2970	ENGINE FUEL GAS PRESS	22	25	60	70	22.1	25	60	70	—	—	—	—
TZE5109	ENGINE AIR MAN TEMP	-	-	145	150	—	—	145	150	-	-	—	—
TZE5110	ENGINE OIL TEMP	-	-	200	205	-	-	200	205	-	-	—	—
TZE5111	ENGINE JACKET WATER TEMP	-	-	200	215	-	-	200	215.1	—	—	—	—
TZE5112	ENGINE AUX WATER TEMP	-	-	140	150	-	-	140	150	—	—	—	—
TZE5113	ENGINE PRE-TURBOR TEMP	-	700	1200	-	-	700	1200	-	-	—	—	-
TZE5114	ENGINE POST-TURBOR TEMP	-	700	1200	-	-	700	1200	-	-	—	—	-

SE5100	ENGINE SPEED	-	-	1900	1980	-	-	1900	1980	-	-		

TAG	DESCRIPTION	SET POINT				AS FOUND				AS LEFT			
		LL	L	H	HH	LL	L	H	HH	LL	L	H	HH
LSLL5101 ✓	ENGINE OIL LEVEL LL	10	-	-	-	10	-	-	-		-	-	-
LSLL5801 ✓	ENG JACKET WATER LEVELL LL	OK				OK							
LSLL5802 ✓	AUXILITY WATER LEVEL LL	OK				OK							
XY7111A	GENERATOR UNDER VOLTAGE	OK				OK							
XY7111B	GENERATOR OVERVOLTAGE				OK				OK				
XY7114	GENERATOR OVER CURRENT				OK				OK				
VZT2970	GENERATOR VIBRATION IN/SEC			0.3	0.5			0.3	0.5				
TZE2971	GEN WINDING TEMP PHASE 1			347	355			347	355				
TZE2972	GEN WINDING TEMP PHASE 2			347	355			347	355				
TZE2973	GEN WINDING TEMP PHASE 3			347	355			347	355				
PZT3962	PRE LUBE /STARTER PRESS	0	75	85	100	0	75	85	100				
TE5101	ENGINE TEMPERATURE CYL1		700	1200			700	1200					
TE5102	ENGINE TEMPERATURE CYL2		700	1200			700	1200					
TE5103	ENGINE TEMPERATURE CYL3		700	1200			700	1200					
TE5104	ENGINE TEMPERATURE CYL4		700	1200			700	1200					
TE5105	ENGINE TEMPERATURE CYL5		700	1200			700	1200					
TE5106	ENGINE TEMPERATURE CYL6		700	1200			700	1200					
TE5107	ENGINE TEMPERATURE CYL7		700	1200			700	1200					
TE5108	ENGINE TEMPERATURE CYL8		700	1200			700	1200					
PCV-W1556	FUEL GAS PRESSURE REGULATOR			50				50					
PCV-W1557	STARTING GAS PRESUURE REGULATOR			100				100					
HZS2971A ✓	EMERGENCY STOP BUTTON	FUNCTION TEST				(✓) ( ) REMARK:							
XY2971	REMOTE ESD	FUNCTION TEST				(✓) ( ) REMARK:							
UA5103	CPU-95 IGNITION FAULT	FUNCTION TEST				(✓) ( ) REMARK:							
XY7113	GENERATOR GROUND FAULT	FUNCTION TEST				(✓) ( ) REMARK:							
UA7110	MULTIFUNCTION RELAY FAULT	FUNCTION TEST				(✓) ( ) REMARK:							

5.1 TEST OF CCR REMOTE SHUTDOWN (✓) ( ) REMARK: _____

5.2 CHECK 'GENSET RUNNING' FEEDBACK TO CCR (✓) ( ) REMARK: _____

6) GENERATOR ELECTRICAL CHECKS:

6.1 CHECK GROUND STRAP CONNECTION (✓) ( ) REMARK: _____

6.2 CHECK GENERATOR WIRING CONNECTIONS (✓) ( ) REMARK: _____

6.3 CHECK / CLEAN GENERATOR SCREENS (✓) ( ) REMARK: _____

6.4 **VISUAL AND INSPECTION**

- PHYSICAL DAMAGE (✓) ( ) REMARK: _____
- PROTECTIVE SLEEVING, FITTING, BUS BAR SUPPORT (✓) ( ) REMARK: _____
- INSULATION DAMAGE (✓) ( ) REMARK: _____
- TIGHTNESS OF CONNECTIONS (✓) ( ) REMARK: _____
- TIGHTNESS OF TERMINALS (✓) ( ) REMARK: _____
- CT, PT, FUSES, METERING (✓) ( ) REMARK: _____
- AVR (✓) ( ) REMARK: _____
- ENGINE SPEED CONTROL WOODWARD (✓) ( ) REMARK: _____
- ENCLOSURE CONDITION AND INTERNAL COOLING (✓) ( ) REMARK: _____
- WIRES CLEARANCE SPACING (✓) ( ) REMARK: _____
- EPC-150 (✓) ( ) REMARK: _____
- CPU95 (✓) ( ) REMARK: _____

6.5 GENERATOR WINDING CHECK:

- MAIN ROTOR MEGGER TEST/PI TEST (>1.5 M?) ( ) (✓) REMARK: _____
- MAIN STATOR MEGGER TEST/PI TEST (>1.5 M?) (✓) ( ) REMARK: _____
- EXCITER FIELD MEGGER TEST/PI TEST (>1.5 M?) (✓) ( ) REMARK: _____
- EXCITER ARMATURE MEGGER TEST/PI TEST (>1.5 M?) (✓) ( ) REMARK: _____
- MAIN ROTOR WINDING RESISTANCE ( ) (✓) REMARK: _____

- MAIN STATOR WINDING RESISTANCE (✓) ( ) REMARK: _____
- EXCITER FIELD WINDING RESISTANCE (✓) ( ) REMARK: _____
- EXCITER ARMATURE WINDING RESISTANCE (✓) ( ) REMARK: _____
- ALTERNATOR COIL CLEANING AND DRYING IF REQUIRE ( ) ( ) REMARK: _____

6.6 **RECTIFIER AND SPACE HEATER CHECK**

- SURGE ARRESTOR CHECK (✓) ( ) REMARK: _____
- RECTIFIER CONNECTION AND OPERATION (✓) ( ) REMARK: _____
- SPACE HEATER OPERATION CHECK ( ) ( ) REMARK: _____
- CLEAN GENERATOR TERMINAL ENCLOSURE (✓) ( ) REMARK: _____
- PROPER ROTATING (✓) ( ) REMARK: _____

6.7 INSULATION RESISTANCE TEST @ 500 VDC

TIME (minute)	MAIN STATOR (MΩ)			MAIN ROTOR (MΩ)	EXCITOR STATOR (MΩ)	EXCITOR ROTOR		
	T1-G	T2-G	T3-G			T1-G	T2-G	T3-G
1	> 550	> 550	> 550	–	> 550	–	–	–
10	> 550	> 550	> 550	–	–	–	–	–
PI	–	–	–	–	–	–	–	–

6.8 WINDING RESISTANCE TEST

MAIN STATOR (milliΩ)			MAIN ROTOR (Ω)	EXCITOR STATOR (Ω)	EXCITOR ROTOR (milli Ω)		
T1-T4	T2-T5	T3-T6			T1-G	T2-G	T3-G
0.2Ω	0.2Ω	0.2Ω	–	10.0 Ω	–	–	–

6.8 REMOVE RUBBISH AND CLEAN AREA (✓) ( ) REMARK: _____

7) PERFORM CHECK &TEST RUN ON GENERATOR:

7.1 COORDINATE WITH OPERATIONS TO MAKE EQUIPMENT AVAILABLE FOR SERVICE (✓) ( ) REMARK: _____

7.2 CARRY OUT PRE-START INSPECTION AND TEST RUN FOR UNDER LOAD AND RECORD READING ON TABLE ABOVE 2.6 (✓) ( ) REMARK: _____

8) FINAL CHECK:

8.1 RECHECK ALL ACCESSIBLE INSTRUMENT AND ELECTRICAL SYSTEM FOR DAMAGE, FAULTS, LEAKS, LOOSE OR BROKEN CONNECTION. (✓) ( ) REMARKS _____

8.2 SIGN OFF WORK PERMIT AND CLOSE PM WORK ORDER. (✓) ( ) REMARKS _____

==========

COMPLETED BY: Teerapong D / Wisitsak P **DATE:** 21 Feb, 2025

COMMENT: _____

SUPERVISOR : PPMJ **, DATE :** 22 Feb 2025

Inspection Report

Work Order Details

Inspection Type
Gen-Recip Engine(Gas)-Mech (THA)

Work Order #
1247351-BEMECHROV

Description
1Y GAS GEN (WAU) PM

Scheduled Date
03/11/2025

Status
50 - Ready to Schedule

Local Code 11
GGM

Local Code 13

Service Type
GMD365

Work Center
BEMECHROV

Branch Plant
3800BLQNTA

Fields
BENCHAMAS

Platform Tag
BENCHAMAS

ECA Ranking
2

PM Status
50

PM Description
1Y GAS GEN (WAU) PM

SD Category

Plan Date
2/25/2025 12:00:00 AM

Equipment Details

Equipment #
BEWB-ZAN-B7020

Description
1Y GAS GEN (WAU) PM

Parent #
BEWB-IG

Area
BENCHAMAS

Sub Area
BEWB-WF

Equipment Class
Electric Generator

Assignment and Status

Completed by
[redacted]

Completed on
2/22/2025 8:02:37 AM

Status
Completed

Approved by
[redacted]

Approved on

Thursday, January 09, 2025 13:30:31

Inspection Summary

Completed by Worawat S./Kritsadakorn C./Thaweeroj P./Teerapong D./Wisitsak P.

Reviewer Summary

Renewed 3 Thermostat of jacket cooling system as original parts (JDE#23760).

The equipment is accurate and in normal condition.

Equipment Details

Field Name	Original Value	New Value

Inspection Items

General

Item	Response	Completion
SELECT LOCATION	BENCHAMAS	
SELECT MAINTENANCE INTERVAL	1Y	
SELECT ENGINE MODEL	WAUKESHA VGF/H24GL-LCR	

PRE-REQUISITE TASKS

Item	Response	Completion
- TOOL BOX MEETING AND HA/JSA DISCUSSION (ADDITION OR REVISE IF REQUIRE) - COORDINATE WITH	Yes	

PRODUCTION TO MAKE EQUIPMENT AVAILABLE FOR INSPECTION - VISUALLY INSPECT ALL ACCESSIBLE PARTS FOR LEAKS, LOOSE CONNECTIONS AND FITTINGS AND NON STANDARD CONDITIONS

PRE-SHUTDOWN TASK

Item	Response	Completion
CONDITION MONITORRING: REVIEW ALARM AND MALFUNCTION HISTORY THRU LOG AND DCS	Yes	
LEAVE THE ENGINE IDLING FOR NORMAL TEMPERATURE COOLDOWN ABOUT 10 MINS	Yes	

SHUTDOWN TASK

Item	Response	Completion
SHUTDOWN THE UNIT, ISOLATE ALL HAZARD ENERGY AND TAG FOR SAFETY	Yes	

LUBE OIL SYSTEM TASK

Item	Response	Completion
TAKE OIL SAMPLE 250 CC	No	LVOI@chevron.com 2/22/2025 10:05:26 AM
CHANGE ENGINE LUBE OIL AND FILTER	Yes	LVOI@chevron.com 2/22/2025 10:05:26 AM
INSPECT/CLEAN OR REPLACE OIL SEPERATOR ELEMENT	Yes	LVOI@chevron.com 2/22/2025 10:05:26 AM
REVIEW TEMPERATURE RECORD. IF TEMPERATURE EXCEED SPECIFICATION THEN DISMANTLE OIL COOLER FOR INSPECT AND CLEAN	Yes	LVOI@chevron.com 2/22/2025 10:05:26 AM
CLEAN & CHANGE MICRO SPIN PAPER LINER	Yes	LVOI@chevron.com 2/22/2025 10:05:26 AM
INSPECT/LUBRICATE PRE-LUBE PUMP&MOTOR	Yes	LVOI@chevron.com 2/22/2025 10:05:26 AM

COOLING SYSTEM TASK

Item	Response	Completion
CHECK THE ENGINE COOLANT LEVEL AND PH RECORD (PH 8.0 - 10.5)	Yes	
CHECK THE COOLING SYSTEM FOR LEAKS OR LOOSE CONNECTIONS. ENSURE THAT THE CONNECTIONS ARE IN PROPER CLAMPED	Yes	
CHECK THE WATER PUMP EVIDENCE OF LEAK	Yes	
REPLACE COOLING FAN BELTS	Yes	LVOI@chevron.com 2/22/2025 10:05:26 AM
CHANGE ENGINE COOLANT WATER	Yes	LVOI@chevron.com 2/22/2025 10:05:26 AM
REPLACE JACKET WATER PUMP IF REQUIRED	Yes	LVOI@chevron.com 2/22/2025 10:05:26 AM
REPLACE AUX WATER PUMP	No	LVOI@chevron.com 2/22/2025 10:05:26 AM

Comments/Recommendations:
Visual inspected found normal condition.

REPLACE THERMOSTAT OF JACKET WATER SYSTEM	Yes	LVOI@chevron.com 2/22/2025 10:05:26 AM

Comments/Recommendations:
Thermostat range 190 F.

AIR INTAKE AND EXHAUST SYSTEM TASK

Item	Response	Completion
REPLACE PRE-FILTER AND AIR FILTER	Yes	LVOI@chevron.com 2/22/2025 10:05:26 AM

INSPECT/CLEAN ENGINE AIR BREATHER	Yes	
CHECK EXTERNAL LEAK OF ROCKER ARM COVER	Yes	LVOI@chevron.com 2/22/2025 10:05:26 AM
VISUAL INSPECT WASTEGATE CONDITION	Yes	LVOI@chevron.com 2/22/2025 10:05:26 AM
Comments/Recommendations: N/A		
VISUAL INSPECT TURBO CHARGER	Yes	LVOI@chevron.com 2/22/2025 10:05:26 AM
INSPECTION AND ADJUST VALVE CLEARANCE : VALVE LASH (COLD) : INTAKE 0.008" / EXH. 0.026" FIRING ORDER: 1-4-2-6-8-5-7-3	Yes	LVOI@chevron.com 2/22/2025 10:05:26 AM
INSPECTION TURBO CHARGER CLEARANCE (STD. MAX AXIAL PLAY = 0.003 – 0.010 " OR 0.08 – 0.25 MM)	Yes	LVOI@chevron.com 2/22/2025 10:05:26 AM
CHECK/ADJUST WASTEGATE ACTUATOR PRELIMINARY (STD. DISTANCE "A" = 1.18" / 30 MM) **SEE MAINTENANCE MANUAL	No	LVOI@chevron.com 2/22/2025 10:05:26 AM
Comments/Recommendations: N/A		
CYLINDER COMPRESSION TEST. (@ RATIO 8.7:1 = 190-212 PSI)	CYLINDER #1: 1145 PSI CYLINDER #2: 1157 PSI CYLINDER #3: 1189 PSI CYLINDER #4: 1153 PSI CYLINDER #5: 1137 PSI CYLINDER #6: 1135 PSI CYLINDER #7: 1152 PSI CYLINDER #8: 1139 PSI	LVOI@chevron.com 2/22/2025 10:05:26 AM
REPLACE ROCKER ARM COVER O-RING	Yes	LVOI@chevron.com 2/22/2025 10:05:26 AM

FUEL SYSTEM TASK

Item	Response	Completion
FUEL PIPE LINE AND CONNECTORS INSPECTION	Yes	
FUEL GAS FILTER SKID INSPECTION	Yes	LVOI@chevron.com 2/22/2025 10:05:26 AM
DRAIN WATER FROM FUEL SYSTEM	Yes	
FUEL GAS PRESSURE CHECK AND RECORDING (RE-ADJUST IF NECESSARY)	Yes	
CLEAN FUEL GAS REGULATOR	Yes	LVOI@chevron.com 2/22/2025 10:05:26 AM
CHECK/ADJUST AIR FUEL RATIO (GAS OVER AIR 5-10 INH2O)	Yes	LVOI@chevron.com 2/22/2025 10:05:26 AM
CLEAN/INSPECT CARBURETOR AIR/GAS VALVE	Yes	LVOI@chevron.com 2/22/2025 10:05:26 AM
REPLACE CARBURETOR DIAPHARGM/CARBURETOR GASKET	No	LVOI@chevron.com 2/22/2025 10:05:26 AM
Comments/Recommendations: Part incorrected, Will be review part number.		

IGNITION SYSTEM TASK

Item	Response	Completion
CLEAN/INSPECT ALL SPARK PLUG	Yes	LVOI@chevron.com 2/22/2025 10:05:26 AM
CHANGE ALL SPARK PLUGS	Yes	LVOI@chevron.com 2/22/2025 10:05:26 AM
CHECK ALL IGNITION WIRING AND CONNECTORS	Yes	
CLEAN/INSPECT ALL IGNITION COILS AND EXTENSION	Yes	
CHECK THE IGNITION TIMING (BTDC)	Yes	

ENGINE TASK

Item	Response	Completion

TASKS TO BE OBSERVED AND RECORDED WHILE ENGINE RUNNING	OIL PRESSURE OUTLET: 77 OIL PRESSURE DIFF: - OIL PRESSURE INLET: - TURBO OIL PRESSURE: 76 COOLER VIBRATION: 0.34 ENGINE VIBRATION: 0.139 GENERATOR VIBRATION: 0.211 ENGINE JACKET WATER PRESSURE: 25.5 AUX JACKET WATER PRESSURE: 15 CYL. #1 EXHAUST GAS TEMPERATURE: 1145 CYL. #2 EXHAUST GAS TEMPERATURE: 1157 CYL. #3 EXHAUST GAS TEMPERATURE: 1189 CYL. #4 EXHAUST GAS TEMPERATURE: 1153 CYL. #5 EXHAUST GAS TEMPERATURE: 1137 CYL. #6 EXHAUST GAS TEMPERATURE: 1135 CYL. #7 EXHAUST GAS TEMPERATURE: 1152 CYL. #8 EXHAUST GAS TEMPERATURE: 1139 PRE-TURBO TEMPERATURE: 1061 POST-TURBO TEMPERATURE: 961.5 ENGINE JACKET WATER TEMPERATURE: 163 AUX WATER TEMPERATURE: 116 ENGINE OIL TEMPERATURE: 156 FUEL GAS SUPPLY PRESSURE: 27.9 ENGINE SPEED: 1800 RUNNING HOUR: 14966
CHECK FOR UNUSUAL NOISES	Yes
CHECK FOR EXESSIVE SMOKE	Yes
REMOVE STARTER TO INSPECT DRIVE BENDIX AND LUBRICATE SOLINOID VALVE	Yes

CONTROL AND POWER SYSTEM

Item	Response	Completion
CHECK ALL FUNCTIONS ON THE CONTROL PANEL ARE NORMAL AND FUNCTIONING	Yes	
CHECK ALL ALARM ANNUNCIATIONS ARE IN GOOD CONDITION AND FUNCTIONING	Yes	

FINAL CHECK

Item	Response	Completion
CHECK ALL PROTECTION GUARDS MUST BE IN PLACE	Yes	
CHECK THE ENGINE FOUNDATION AND HOLDING DOWN BOLTS	Yes	
INSPECTION AND CLEAN CONTAINMENT UNDERNEATH THE ENGINE	Yes	
REPORT ANY MALFUNCTION	Yes	
SHUTDOWN GAS GENERATOR ENGINE AND RETURN TO NORMAL OPERATION	Yes	
HOUSE KEEPING WORKING AREA, SIGN OFF WORK PERMIT AND CLOSE PM WORK ORDER	Yes	

JOB COMPLETION

Item	Response	Completion
- RECHECK ALL ACCESSIBLE SYSTEM FOR DAMAGE, FAULTS, LEAKS, LOOSE OR BROKEN CONNECTION - RETURN UNIT TO NORMAL OPERATION - ENSURE THE EQUIPMENT IS LEFT IN A SAFE CONDITION AND THE AREA LEFT TIDY - SIGN OFF THE WORK PERMIT AND RETURN IT TO THE AREA AUTHORITY	Yes	

©2025, rev. 3.1.0.0

WO: 1260839 (BEWC GAS GEN. A)

REVISION	DATE	REASON FOR ISSUE/CHANGE	CMOR #	ENTER BY
1	6-Feb-18	Lube oil analysis optimization		[redacted]
2	29-Nov-18	Revise Jobcard		
3	16-Mar-20	Revise Jobcard		

JOBCARD NUMBER: **6M PM GAS GEN-WAUKESHA ENG-IE**

SKID/EQUIPMENT: BEWC-ZAN-C2980A/B ; GAS ENGINE GENERATOR A/B

OPT. SEQUENCE: 10 6M PM GAS GEN-WAUKESHA ENG-IE BEWC A/B

WORK CENTER: **BENIE**

CREW SIZE	EST.MAN-HRS	RESOURCE DESCRIPTIONS
2	24	INSTRUMENT AND ELECTRICIAN, BENCHAMAS

EQUIPMENT CRITICALITY: C- 2

MFGR, INDUSTRY REFERENCES AND ENGINEERING RECOMMENDATION:

- Mfg. : SOURE
- WAUKESHA, Model VRG L36/GL/GLD

SPARE PARTS REQUIREMENT: N/A

JOB INSTRUCTIONS

180D-GAS GEN-WAU-L36/GL-IE

EQUIPMENTS UNDER THIS TASK:
-BEWC-ZAN-C2980A
-BEWC-ZAN-C2980B

IE TASKS **COMPLETED (YES) (NO)**

SAFETY PRECAUTIONS

1. INFORM THE AREA AUTHORITY OF THE INTENDED WORK. (✓) ( ) REMARK:

2. TOOL BOX MEETING AND HA/JSA DISCUSSION (ADDITION OR REVISE IF REQUIRE). (✓) ( ) REMARK:

3. SIGN ON THE PERMIT BOTH OF THE AREA CONTROLLER AND PMCOW. (✓) ( ) REMARK:

4. SYSTEM ISOLATION (LOTO) AND MARKED IN THE IHE/EIC FORMS (IF REQUIRE). (✓) ( ) REMARK:

5. ENSURE AND ALWAYS MAKE REPAIRS WITH THE ENGINE STOPPED CONDITION AND THE STARTING SYSTEM DISABLED. (✓) ( ) REMARK:

6. IN ADDITIONAL INFORMATION PLEASE REFER TO THE VENDORS OPERATION AND MAINTENANCE MANUAL. (✓) ( ) REMARK:

TASKS TO BE CARRIED OUT FOR INSPECT AND MAINTENANCE.

Please record the actual running data before stop and after running with loaded. *

1.0 OBTAIN A PERMIT TO WORK (✓) ( ) REMARK:

2.0 TASKS TO BE CARRIED OUT WHILST ENGINE IS RUNNING

2.1 CHECK FOR ANY LEAKS (✓) ( ) REMARK:

2.2 CHECK FOR UNUSUAL NOISES (✓) ( ) REMARK:

2.3 CHECK FOR EXCESSIVE VIBRATION (✓) ( ) REMARK:

2.4 CHECK FOR EXCESSIVE SMOKE (✓) ( ) REMARK:

2.5 CHECK FOR FUEL LEAKS (✓) ( ) REMARK:

2.6 CHECK FOR ANY OIL OR COOLANT LEAKS (✓) ( ) REMARK:

3.0 TASKS TO BE CARRIED AFTER ENGINE SHUTDOWN

3.1 CHECK UNIT FOR SIGNS OF DAMAGE / CORROSION / DIRT (✓) ( ) REMARK:

3.2 CHECK GUARDS ARE MISSING OR DAMAGED (✓) ( ) REMARK:

4.0 ENCLOSURE / CONTROL PANEL

4.1 CHECK MCCB WIRING CONNECTIONS (✓) ( ) REMARK:

4.2 CHECK MCCB & GFD OPERATION (✓) ( ) REMARK:

4.3 CHECK BATTERY SYSTEM (✓) ( ) REMARK:

4.4 RECORD BATTERY VOLTAGE: ( ) (✓) REMARK:

BATTERY A: _____

BATTERY B: _____

4.5 CHECK BATTERY CHARGER AND WIRING ( ) (✓) REMARK:

4.6 RECORD BATTERY CHARGER OUTPUT ( ) (✓) REMARK:

VOLTAGE: _____ AMPS: _____

4.7 CHECK ELECTRICAL ENCLOSURES FOR DAMAGE / WATER / LOOSE OR MISSING BOLTS ( ) (✓) REMARK:

4.8 CHECK STARTER MOTOR AND GREASE BENDIX ( ) (✓) REMARK:

NO ELECTRIC STARTER, UNIT STARTING BY ONLY GAS STARTER MOTOR

4.9 CHECK / CLEAN STARTER RELAY CONTACTS (✓) ( ) REMARK:

4.10 CHECK GOVERNOR AND SPEED CONTROL (✓) ( ) REMARK:

4.11 CHECK IGNITION WIRING AND CONNECTORS (✓) ( ) REMARK:

4.12 CHECK CONDITION OF COIL & LEADS (✓) ( ) REMARK:

4.13 CHECK GOVERNOR SPEED CONTROL (✓) ( ) REMARK:

5.0 CHECK READING INSTRUMENTS ENGINE:

5.1 ENGINE OIL PRESSURE TRANSDUCER (✓) ( ) REMARK:

5.2 ENGINE WATER PRESSURE TRANSDUCER (✓) ( ) REMARK:

5.3 ENGINE OIL TEMPERATURE T/C (✓) ( ) REMARK:

5.4 ENGINE EJW T/C (✓) ( ) REMARK:

5.5 ENGINE EXHAUST TEMPERATURE T/C (✓) ( ) REMARK:

5.6 MAGNATIC PICK UP SENSOR (✓) ( ) REMARK:

5. FUEL GAS REGULATOR SUPPLY (✓) ( ) REMARK: _____

6.0 CONTROL PANEL

6.1 CHECK FOR ANY DAMAGE TO CONTROL PANEL (✓) ( ) REMARK:

6.2 TIGHTEN CONTROL PANEL WIRING (✓) ( ) REMARK:

6.3 CHECK CONTROL PANEL LIGHTS / DISPLAY (✓) ( ) REMARK:

6.4 BACK-UP DATA DE-2500 OR DE-3000

6.5 CHECK CONDITION & FUNCTION ALARM AND SHUTDOWN DEVICES:

- EMERGENCY STOP PUSH BUTTON (✓) ( ) REMARK:
- LOW EJW LEVEL (✓) ( ) REMARK:
- LOW ENGINE OIL LEVEL (✓) ( ) REMARK:
- FUEL GAS SHUTOFF VALVE (✓) ( ) REMARK:

7.0 GENERATOR

7.1 CHECK GROUND STRAP CONNECTION (✓) ( ) REMARK:

7.2 CHECK GENERATOR WIRING CONNECTIONS (✓) ( ) REMARK:

7.3 CHECK AND CLEAN GENERATOR SCREENS (✓) ( ) REMARK:

7.4 CHECK SPACE HEATER IS OPERATIONAL (✓) ( ) REMARK:

7.5 CHECK GENERATOR WINDING RESISTANCE (✓) ( ) REMARK:

R – S 0.1 OHM
S – T 0.1 OHM
T – R 0.1 OMH
R – GND 75.1 M OHM
S – GND 76.8 M OHM
T- GND 77.1 M OHM

7.6 EXCITOR CONDITION (✓) ( ) REMARK:
11.3 Ω / 78.2 MΩ

7.7 MAIN ARMATURE CONDITION (✓) ( ) REMARK:

7.8 MAIN STATOR CONDITION (✓) ( ) REMARK:

8.0 **GENERATOR ELECTRICAL CHECKS:**

8.1 VISUAL INSPECTION

- PHYSICAL DAMAGE (✓) ( ) REMARK:
- STARTER (✓) ( ) REMARK:
- PROTECTIVE SLEEVING, FITTING, BUS BAR SUPPORT (✓) ( ) REMARK:
- INSULATION DAMAGE (✓) ( ) REMARK:
- TIGHTNESS OF CONNECTIONS (✓) ( ) REMARK:
- CT, PT, FUSES, METERING (✓) ( ) REMARK:
- AVR (✓) ( ) REMARK:

9.0 FUNCTION TEST ENGINE (START/STOP)

9.1 Manual, Local panel (✓) ( ) REMARK:

9.2 Auto start (CCR, Local HMI,FAULT FUNCTION) (✓) ( ) REMARK:

9.3 Auto load transfer (Ensure UPS battery functioning) (✓) ( ) REMARK:

9.4 CHECK STATUS RUNNING' FEEDBACK TO CCR (✓) ( ) REMARK:

10.0 RECORD READINGS: (✓) ( ) REMARK:

DESCRIPTION	READING	UNITS	LOW SP	HIGH SP
RUN HOURS	28352	HRS.		
OIL PRESSURE	81	PSI		
EJW TEMPERATURE	171	°F		
OIL TEMPERATURE	160	°F		
RPM	1804	RPM		
PHASE 1 CURRENT - R	209.5	A		
PHASE 2 CURRENT - S	213.6	A		
PHASE 3 CURRENT - T	196.6	A		
PHASE 1 VOLTAGE - R-S	480.2	V		
PHASE 2 VOLTAGE - S-T	479.0	V		
PHASE 3 VOLTAGE - T-R	480.2	V		

11.0 HOUSE KEEPING AND CLEAN AREA (✓) ( ) REMARK:

JOB COMPLETION

1. ENSURE THE EQUIPMENT IS LEFT IN A SAFE CONDITION AND THE AREA LEFT TIDY. (✓) ( ) REMARK:

2. SIGN OFF THE WORK PERMIT AND RETURN IT TO THE AREA AUTHORITY. (✓) ( ) REMARK:

3. RAISE WORK ORDERS (PMI) FOR ANY MAJOR FOUND DURING PM PERFORMING OR NEED TO BE CONTINUE. (✓) ( ) REMARK:

4. COMPLETE THE JOB REPORT AND DATA INPUT INTO THE CMMS. (✓) ( ) REMARK:

5. MAINTENANCE SUPERVISOR TO CHECK THE QUALITY, VALIDITY AND ACCURACY OF REPORTING AND THEN CLOSE OUT THE WORK ORDER. (✓) ( ) REMARK:

==========

COMPLETED BY: SONGPOL S. / WINAT K. **DATE:** 09 SEP 2025

COMMENT: N/A

SUPERVISOR: PPMJ, **DATE:** 14 Sep 2025

NO: 1261329 (BEWC GAS GEN. B)

REVISION	DATE	REASON FOR ISSUE/CHANGE	CMOR #	ENTER BY
1	6-Feb-18	Lube oil analysis optimization		[redacted]
2	29-Nov-18	Revise Jobcard		
3	16-Mar-20	Revise Jobcard		

JOBCARD NUMBER: 6M PM GAS GEN-WAUKESHA ENG-IE

SKID/EQUIPMENT: BEWC-ZAN-C2980A/B ; GAS ENGINE GENERATOR A/B

OPT. SEQUENCE: 10 6M PM GAS GEN-WAUKESHA ENG-IE BEWC A/B

WORK CENTER: BENIE

CREW SIZE	EST.MAN-HRS	RESOURCE DESCRIPTIONS
2	24	INSTRUMENT AND ELECTRICIAN, BENCHAMAS

EQUIPMENT CRITICALITY: C- 2

MFGR, INDUSTRY REFERENCES AND ENGINEERING RECOMMENDATION:

- Mfg. : SOURE
- WAUKESHA, Model VRG L36/GL/GLD

SPARE PARTS REQUIREMENT: N/A

JOB INSTRUCTIONS

180D-GAS GEN-WAU-L36/GL-IE

EQUIPMENTS UNDER THIS TASK:
-BEWC-ZAN-C2980A
-BEWC-ZAN-C2980B

IE TASKS — COMPLETED (YES) (NO)

SAFETY PRECAUTIONS

1. INFORM THE AREA AUTHORITY OF THE INTENDED WORK. (✓) ( ) REMARK:

2. TOOL BOX MEETING AND HA/JSA DISCUSSION (ADDITION OR REVISE IF REQUIRE). (✓) ( ) REMARK:

3. SIGN ON THE PERMIT BOTH OF THE AREA CONTROLLER AND PMCOW. (✓) ( ) REMARK:

4. SYSTEM ISOLATION (LOTO) AND MARKED IN THE IHE/EIC FORMS (IF REQUIRE). (✓) ( ) REMARK:

5. ENSURE AND ALWAYS MAKE REPAIRS WITH THE ENGINE STOPPED CONDITION AND THE STARTING SYSTEM DISABLED. (✓) ( ) REMARK:

6. IN ADDITIONAL INFORMATION PLEASE REFER TO THE VENDORS OPERATION AND MAINTENANCE MANUAL. (✓)( ) REMARK:

TASKS TO BE CARRIED OUT FOR INSPECT AND MAINTENANCE.

***Please record the actual running data before stop and after running with loaded. ***

1.0 OBTAIN A PERMIT TO WORK (✓)( ) REMARK:

2.0 TASKS TO BE CARRIED OUT WHILST ENGINE IS RUNNING

2.1 CHECK FOR ANY LEAKS (✓)( ) REMARK:

2.2 CHECK FOR UNUSUAL NOISES (✓)( ) REMARK:

2.3 CHECK FOR EXCESSIVE VIBRATION (✓)( ) REMARK:

2.4 CHECK FOR EXCESSIVE SMOKE (✓)( ) REMARK:

2.5 CHECK FOR FUEL LEAKS (✓)( ) REMARK:

2.6 CHECK FOR ANY OIL OR COOLANT LEAKS (✓)( ) REMARK:

3.0 TASKS TO BE CARRIED AFTER ENGINE SHUTDOWN

3.1 CHECK UNIT FOR SIGNS OF DAMAGE / CORROSION / DIRT (✓)( ) REMARK:

3.2 CHECK GUARDS ARE MISSING OR DAMAGED (✓)( ) REMARK:

4.0 ENCLOSURE / CONTROL PANEL

4.1 CHECK MCCB WIRING CONNECTIONS (✓)( ) REMARK:

4.2 CHECK MCCB & GFD OPERATION (✓)( ) REMARK:

4.3 CHECK BATTERY SYSTEM (✓)( ) REMARK:

4.4 RECORD BATTERY VOLTAGE: ( )(✓) REMARK:

BATTERY A: _____

BATTERY B: _____

4.5 CHECK BATTERY CHARGER AND WIRING ( )(✓) REMARK:

4.6 RECORD BATTERY CHARGER OUTPUT ( )(✓) REMARK:

VOLTAGE: _____ AMPS: _____

4.7 CHECK ELECTRICAL ENCLOSURES FOR DAMAGE / WATER / LOOSE OR MISSING BOLTS ( )(✓) REMARK:

4.8 CHECK STARTER MOTOR AND GREASE BENDIX ( )(✓) REMARK:

NO ELECTRIC STARTER, UNIT STARTING BY ONLY GAS STARTER MOTOR

4.9 CHECK / CLEAN STARTER RELAY CONTACTS (✓)( ) REMARK:

4.10 CHECK GOVERNOR AND SPEED CONTROL (✓)( ) REMARK:

4.11 CHECK IGNITION WIRING AND CONNECTORS (✓)( ) REMARK:

4.12 CHECK CONDITION OF COIL & LEADS (✓) ( ) REMARK:

4.13 CHECK GOVERNOR SPEED CONTROL (✓) ( ) REMARK:

5.0 CHECK READING INSTRUMENTS ENGINE:

5.1 ENGINE OIL PRESSURE TRANSDUCER (✓) ( ) REMARK:

5.2 ENGINE WATER PRESSURE TRANSDUCER (✓) ( ) REMARK:

5.3 ENGINE OIL TEMPERATURE T/C (✓) ( ) REMARK:

5.4 ENGINE EJW T/C (✓) ( ) REMARK:

5.5 ENGINE EXHAUST TEMPERATURE T/C (✓) ( ) REMARK:

5.6 MAGNATIC PICK UP SENSOR (✓) ( ) REMARK:

5. FUEL GAS REGULATOR SUPPLY (✓) ( ) REMARK: _____

6.0 CONTROL PANEL

6.1 CHECK FOR ANY DAMAGE TO CONTROL PANEL (✓) ( ) REMARK:

6.2 TIGHTEN CONTROL PANEL WIRING (✓) ( ) REMARK:

6.3 CHECK CONTROL PANEL LIGHTS / DISPLAY (✓) ( ) REMARK:

6.4 BACK-UP DATA DE-2500 OR DE-3000

6.5 CHECK CONDITION & FUNCTION ALARM AND SHUTDOWN DEVICES:

- EMERGENCY STOP PUSH BUTTON (✓) ( ) REMARK:
- LOW EJW LEVEL (✓) ( ) REMARK:
- LOW ENGINE OIL LEVEL (✓) ( ) REMARK:
- FUEL GAS SHUTOFF VALVE (✓) ( ) REMARK:

7.0 GENERATOR

7.1 CHECK GROUND STRAP CONNECTION (✓) ( ) REMARK:

7.2 CHECK GENERATOR WIRING CONNECTIONS (✓) ( ) REMARK:

7.3 CHECK AND CLEAN GENERATOR SCREENS (✓) ( ) REMARK:

7.4 CHECK SPACE HEATER IS OPERATIONAL (✓) ( ) REMARK:

7.5 CHECK GENERATOR WINDING RESISTANCE (✓) ( ) REMARK:

R – S 0.1 OHM
S – T 0.1 OHM
T – R 0.1 OMH
R – GND 75.2 M OHM
S – GND 77.3 M OHM
T- GND 77.1 M OHM

7.6 EXCITOR CONDITION (✓) ( ) REMARK:

11.0 Ω / 77.3 MΩ

7.7 MAIN ARMATURE CONDITION (✓) ( ) REMARK:

7.8 MAIN STATOR CONDITION (✓) ( ) REMARK:

8.0 GENERATOR ELECTRICAL CHECKS:

8.1 VISUAL INSPECTION

- PHYSICAL DAMAGE (✓) ( ) REMARK:
- STARTER (✓) ( ) REMARK:
- PROTECTIVE SLEEVING, FITTING, BUS BAR SUPPORT (✓) ( ) REMARK:
- INSULATION DAMAGE (✓) ( ) REMARK:
- TIGHTNESS OF CONNECTIONS (✓) ( ) REMARK:
- CT, PT, FUSES, METERING (✓) ( ) REMARK:
- AVR (✓) ( ) REMARK:

9.0 FUNCTION TEST ENGINE (START/STOP)

9.1 Manual, Local panel (✓) ( ) REMARK:

9.2 Auto start (CCR, Local HMI,FAULT FUNCTION) (✓) ( ) REMARK:

9.3 Auto load transfer (Ensure UPS battery functioning) (✓) ( ) REMARK:

9.4 CHECK STATUS RUNNING' FEEDBACK TO CCR (✓) ( ) REMARK:

10.0 RECORD READINGS: (✓) ( ) REMARK:

DESCRIPTION	READING	UNITS	LOW SP	HIGH SP
RUN HOURS	42172	HRS		
OIL PRESSURE	77	PSI		
EJW TEMPERATURE	114	°F		
OIL TEMPERATURE	118	°F		
RPM	1799	RPM		
PHASE 1 CURRENT - R	200.9	AMP.		
PHASE 2 CURRENT - S	201.8	AMP.		
PHASE 3 CURRENT - T	188.4	AMP.		
PHASE 1 VOLTAGE - R-S	479.4	V		
PHASE 2 VOLTAGE - S-T	478.5	V		
PHASE 3 VOLTAGE - T-R	479.6	V		

11.0 HOUSE KEEPING AND CLEAN AREA (✓) ( ) REMARK:

JOB COMPLETION

1. ENSURE THE EQUIPMENT IS LEFT IN A SAFE CONDITION AND THE AREA LEFT TIDY. (✓) ( ) REMARK:

2. SIGN OFF THE WORK PERMIT AND RETURN IT TO THE AREA AUTHORITY. (✓) ( ) REMARK:

3. RAISE WORK ORDERS (PMI) FOR ANY MAJOR FOUND DURING PM PERFORMING OR NEED TO BE CONTINUE. (✓) ( ) REMARK:

4. COMPLETE THE JOB REPORT AND DATA INPUT INTO THE CMMS. (✓) ( ) REMARK:

5. MAINTENANCE SUPERVISOR TO CHECK THE QUALITY, VALIDITY AND ACCURACY OF REPORTING AND THEN CLOSE OUT THE WORK ORDER. (✓) ( ) REMARK:

==========

COMPLETED BY: SONGPOL S. / WINAT K. **DATE:** 07 SEP 2025

COMMENT: N/A

SUPERVISOR: PPMJ, **DATE:** 14 Sep 2025

Revision	Date	Reason for Issue/Change	CMOR #	Enter by
1	4 Feb 16	Review / Revise / Update		Benchamas Team
2	11 Jul 22	Review / Revise / Update		Benchamas Team
3	28 Jun 24	Update Tasks for End-of-Life		Benchamas Maintenance Team

JOBCARD NUMBER: 2Y PM DIESEL GEN-CAT MECH-IE (Stage 1)

SKID/EQUIPMENT: DIESEL GENERATOR

WORK CENTER: BENRMT

CREW SIZE	DURATION	EST. HRS	RESOURCE DESCRIPTIONS
2	16	32	REMOTE TEAM

EQUIPMENT CRITICAL: *ECA: C2* *IC: N/A*

REQUIRED OPERATIONAL STATUS: *PLANT: ONLINE* *EQUIPMENT: SHUTDOWN*

EQUIPMENT UNDER THIS PM TASK:

BEWD-ZAN-D2905
BEWE-ZAN-E2905
BEWG-ZAN-G2905
BEWH-ZAN-H2905

MFGR, INDUSTRY REFERENCES AND ENGINEERING RECOMMENDATION:

- CATTERPILLAR, Model 3304T

SPARE PARTS REQUIREMENT:

Item	JDE Stock Item Number	Description	EA.
1	42887	Oil filter, CAT 1R-1807	1
2	19871	Fuel filter "Secondary", CAT 1R-0750	1
3	44549	Fuel filter "Primary", CAT 9M-2341	1
4	44438	Air filter, CAT 4L-9851	1
5	43151	V-Belt, CAT 3S-6272 (Set)	1
6	42905	Hose radiator upper, CAT 3N6036	1
7	43182	Hose radiator lower, CAT 3N6033	2
8	66061	Hose radiator oil cooler, CAT 1316645	1
9	44413	Gasket cover valve, CAT 8S1606	1
10	173557	Dello Silver SAE 15W-40, 500549 HLK (Pail)	1
11	52630	Coolant Inhibitor, Catterpillar 217-0616	1

JOB INSTRUCTIONS

MECHANICAL TASKS:

COMPLETED
(YES) (NO)

1) Pre-requisite tasks:

- Obtain work permit, review HA/JSA and carry out toolbox meeting. (✓)( ) Remark:_____
- Coordinate with other teams on the platform to make equipment available for service. (✓)( ) Remark:_____

2) Visual Inspection

- Start engine and run under load. (✓)( ) Remark:_____
- Visually inspect all accessible parts for fuel, engine oil leak, excessive noise vibration, loose connections, fittings and check for non-standard condition. (✓)( ) Remark:_____
- Stop engine and isolate. (✓)( ) Remark:_____

3) Task to be check

- Check cooling water tank level and top up if low. (✓)( ) Remark:_____
- Check and clean radiator fins. (✓)( ) Remark:_____
- Check belt sheave and bearings condition. (✓)( ) Remark:_____
- Check main water pump. (✓)( ) Remark:_____
- Check turbocharger and waste gauge condition. (✓)( ) Remark:_____
- Check & Drain bottom diesel tank level (✓)( ) Remark:_____
- Check engine oil level and lube oil tank level. (✓)( ) Remark:_____
- Clean or replace oil breather. (✓)( ) Remark:_____

4) Task to be replace

- Replace air filter. ( )(✓) Remark: Inspection ok
- Replace fuel filter. (✓)( ) Remark:_____
- Change engine lube oil. (✓)( ) Remark:_____
- Change engine lube oil filter. (✓)( ) Remark:_____
- Change engine cooling water. (✓)(✓) Remark:_____
- Replace engine cooling fan belt. (✓)( ) Remark:_____
- Replace cooling hose. ( )(✓) Remark: Inspection ok

5) Valve Clearance

- Check and replace valve cover gaskets. (✓)( ) Remark:_____
- Check / adjust valve clearances Intake Setting. (0.015") (✓)( ) Remark:_____
- Check / adjust valve clearances Exhaust Setting. (0.030") (✓)( ) Remark:_____

6) Final Inspection:

Test runs the unit.

- Engine (STOP/START) function test. (✓)( ) Remark:_____
- Manual mode, Local panel. (✓)( ) Remark:_____
- Check for excessive noise and loose connections. (✓)( ) Remark:_____

IE TASKS:

ITEM	DESCRIPTION	COMPLETED (YES) (NO); REMARK
1.0	Obtain a Permit To Work	(✓) YES ( ) NO; REMARK _____
	TASKS TO BE CARRIED OUT WHILST ENGINE IS RUNNING	
2.0	Check for any leaks	(✓) YES ( ) NO; REMARK _____
2.1	Check for unusual noises	(✓) YES ( ) NO; REMARK _____
2.2	Check for excessive vibration	(✓) YES ( ) NO; REMARK _____
2.3	Check for excessive smoke	(✓) YES ( ) NO; REMARK _____
2.4	Check for fuel leaks	(✓) YES ( ) NO; REMARK _____
2.5	Check for any oil or coolant leaks	(✓) YES ( ) NO; REMARK _____
	TASKS TO BE CARRIED AFTER ENGINE SHUTDOWN	
3.0	Check unit forsigns of damage / corrosion / dirt	(✓) YES ( ) NO; REMARK _____
3.1	Check guardsare missing or damage	(✓) YES ( ) NO; REMARK _____
	ENCLOSUR / CONTROL PANEL	
4.0	Check MCCB wiring connections	(✓) YES ( ) NO; REMARK _____
4.1	Check MCCB & GFD operation	(✓) YES ( ) NO; REMARK _____
4.2	Check battery system New Battery	(✓) YES ( ) NO; REMARK _____
4.3	Check battery float charging voltage (26-27 VDC) • Battery A (13.02-13.5V): 13.9 VDC • Battery B (13.02-13.5V): 13.4 VDC 26.4 Check Battery CCA *(Replace if less than 840 CCA for CAT model & 500 CCA for Optima blue top model)* • Battery A: — CCA • Battery B: — CCA } New Batt.	(✓) YES ( ) NO; REMARK _____ (✓) YES ( ) NO; REMARK _____
4.4	Check battery chanrger and wiring	(✓) YES ( ) NO; REMARK _____
4.5	Check electrical enclosures for damage / water / loose or missing bolts	(✓) YES ( ) NO; REMARK _____
4.6	Check starter motor and grease bendix	(✓) YES ( ) NO; REMARK _____
4.7	Check / Clean starter relay contacts	(✓) YES ( ) NO; REMARK _____
4.8	Check governor speed control	(✓) YES ( ) NO; REMARK _____
4.9	Check ignition wiring and connectors Not have ignition wiring	( ) YES (✓) NO; REMARK N/A
4.10	Check condition coil & leads Not have coil	( ) YES (✓) NO; REMARK N/A
	CHECK READING INSTRUMENTS ENGINE	
5.0	Engine oil pressure transducer	(✓) YES ( ) NO; REMARK _____
5.1	Engine oil temperature gauge switch	(✓) YES ( ) NO; REMARK _____
5.2	Engine EJW T/C	(✓) YES ( ) NO; REMARK _____
5.3	Magnatic Pick up	(✓) YES ( ) NO; REMARK _____
5.4	Fuel gas regulator supply Not have regulator gas	( ) YES (✓) NO; REMARK N/A
	CONTROL PANEL	
6.0	Check for any damage to control panel	(✓) YES ( ) NO; REMARK _____
6.1	Tighten control panel wiring	(✓) YES ( ) NO; REMARK _____
6.2	Check control panel light / display	(✓) YES ( ) NO; REMARK _____
6.3	Back-up data EMCP2 module	(✓) YES ( ) NO; REMARK _____
6.4	Check condition & function alarm abd shutdown device ✓ - Emergency stop push button ✓ - Low ELW level ✓ - Low engine oil level ✓ - High engine oil temperature switch } Function ok	 (✓) YES ( ) NO; REMARK _____ (✓) YES ( ) NO; REMARK _____ (✓) YES ( ) NO; REMARK _____ (✓) YES ( ) NO; REMARK _____

	- Solenoid gas shutoff valve Not have shutoff valve - Vibration switch	( ) YES (✓) NO; REMARK N/A (✓) YES ( ) NO; REMARK
	GENERATOR	
7.0	Check ground strap connection	(✓) YES ( ) NO; REMARK
7.1	Check generator wring connections	(✓) YES ( ) NO; REMARK
7.2	Check / Clean generator screens	(✓) YES ( ) NO; REMARK
7.3	Check space heater is operational Isolate AC	( ) YES (✓) NO; REMARK Damage
	GENERATOR ELECTRICAL CHECK	
8.0	Visual Inspection ✓- Physical damage ✓- Starter ✓- Protectivesleeving, Fitting, Bus bar support ✓- Insulation damage ✓- Tightnessofconnections ✓- CT, PT,Fuse, Metering ✓- AVR } Visual ok	 (✓) YES ( ) NO; REMARK (✓) YES ( ) NO; REMARK (✓) YES ( ) NO; REMARK (✓) YES ( ) NO; REMARK (✓) YES ( ) NO; REMARK (✓) YES ( ) NO; REMARK (✓) YES ( ) NO; REMARK
8.1	Generator check - Main alternator rotor winding resistance - Main alternator stator winding resistance - Excitor field stator winding resistance - Excitor armature rotor winding resistance } Insulation low, Can operate	 (✓) YES ( ) NO; REMARK (✓) YES ( ) NO; REMARK (✓) YES ( ) NO; REMARK (✓) YES ( ) NO; REMARK
8.2	Rectifier Check - Surge arrestor check - Rectifier connection - Clean rectifier	 (✓) YES ( ) NO; REMARK (✓) YES ( ) NO; REMARK (✓) YES ( ) NO; REMARK
8.3	Insulation Resistance Data test 500 Vdc @ 1 min	(✓) YES ( ) NO; REMARK

RESISTANCE WINDING	RESULT (MΩ)	R TEST (Ω)
~~ALTERATOR MAIN STATOR~~		
~~STATOR WINDING T1-T4~~ 1/2 } Coil	—	0.1 Ω
~~STATOR WINDING T2-T5~~ 1/3 } Coil	—	0.1 Ω
~~STATOR WINDING T3-T6~~ 2/3 } Coil	—	0.1 Ω
INSULATION TEST PHASE TO PHASE @ 500 VDC		
STATOR WINDING T1-T2	3.09M	—
STATOR WINDING T1-T3	6.5M	—
STATOR WINDING T2-T3	5.3M	—
INSULATION TEST PHASE TO GROUND @ 500 VDC		
STATOR WINDING T1-GND	1.3M	—
STATOR WINDING T2-GND	1.6M	—
STATOR WINDING T3-GND	5.9M	—
ALTERNATOR MAIN ROTOR		
ROTOR WINDING RESISTANCE POS - NEG	—	0.1 Ω
ROTOR WINDING INSULATION TEST POS/NEG-GND	4.3M	—
EXCITOR STATOR RESISTANCE AND INSULATION TEST @ 100 VDC		
STATOR EXCITER RESISTANCE F1 -F2	—	4.8 Ω
STATOR EXCITER INSULATION TEST F1F2-GND	2.2M	—
EXCITOR ROTOR RESISTANCE AND INSULATION TEST @ 100 VDC		
~~ROTOR EXCITER T1-T2~~ 1/2 } Coil Rotor Excited	—	0.1 Ω
~~ROTOR EXCITER T2-T3~~ 1/3 } Coil Rotor Excited	—	0.1 Ω
~~ROTOR EXCITER T3-T1~~ 2/3 } Coil Rotor Excited	—	0.1 Ω
ROTOR EXCITER T1-GND	3.4M	—
ROTOR EXCITER T2-GND	3.4M	—
ROTOR EXCITER T3-GND	3.4M	—

DIODE RECTIFIER	FORWARD VOLTAGE/OHM	REVERSE VOLTAGE/OHM
DIODE CHECK #1	29 K	∞
DIODE CHECK #2	24 K	∞
DIODE CHECK #3	38 K	∞
DIODE CHECK #4	23 K	∞
DIODE CHECK #5	24 K	∞
DIODE CHECK #6	29 K	∞

8.4 Perform cleaing & drying if the tesing does not meet criteria or sign of excessive oil accumulated at generator winding (Refer standard XXXXX)

	FUNCTION TEST ENGINE (START/STOP)	
9.0	Engine (STOP/START) function test	(✓) YES ( ) NO; REMARK _____
9.1	Manual, Local panel Auto start (CCR, Local HMI)	(✓) YES ( ) NO; REMARK _____
9.2	Load transfer HMI Auto load transfer (Ensure UPS battery functioning)	(✓) YES ( ) NO; REMARK _____
	RECORD READINGS:	
10.0	Record readings	(✓) YES ( ) NO; REMARK _____

DESCRIPTION	READING	UNITS	LOW SP	HIGH SP
RUN HOURS (Hrs)	112611	Hrs		
OIL PRESSURE (PSI)	80	PSI		
JACKET WATER TEMPERATURE (F)	167	F		
OIL TEMPERATURE (F)	190	F		
SPEED (RPM)	1500	RPM		
PHASE 1 CURRENT	10	AMP		
PHASE 2 CURRENT	9	AMP		
PHASE 3 CURRENT	9	AMP		
✓ PHASE 1-N VOLTAGE	275	Volt		
✓ PHASE 2-N VOLTAGE	275	Volt		
✓ PHASE 3-N VOLTAGE	275	Volt		
✓ PHASE 1-2 VOLTAGE	480	Volt		
✓ PHASE 2-3 VOLTAGE	480	Volt		
✓ PHASE 3-1 VOLTAGE	480	Volt		
LOADED RATING POWER (kW)	6	kW		

	House Keeping:	
11.0	Housekeeping and clean area	(✓) YES ( ) NO; REMARK _____

JOB COMPLETEION:

- Clean engine/generator package and component.
  Visual check generator enclosure panels for cracks or damages. (✓) ( ) Remark:_____
- Return unit to normaloperation. (✓) ( ) Remark:_____
- Sign off work permit. (✓) ( ) Remark:_____

==========

COMPLETED BY: Nikhom / Burnyarit DATE: 24-25 Nov-24

: _____ / _____

COMMENT: PM# 1246995

- Heater damage (Isolate AC supply)
- Alternator low insulation (Met criteria) can operated ✓

PM# 1246997.

SUPERVISOR : Kittipol T, DATE : 26-Nov-24

BEWE

BENCHAMAS

Revision	Date	Reason for Issue/Change	CMOR #	Enter by
1		REVISE JOB CARD FOR MOC 331280	0298/17	[redacted]
2	4-Feb-16	Review / Revise / Update	1152/17	Benchamas Team
3	14-Jun-22	Extend interval (ASO Project)	0082/22	[redacted]
4	23-Dec-22	Review / Revise / Update		Benchamas Team
5	25-Jun-24	Update new Job Tasks (End-of-Life)		Benchamas Maintenance Team

JOBCARD NUMBER: 1Y PM GAS GEN-CAT ENG STG1&2
SKID/EQUIPMENT: GAS GENERATOR STG1&2
WORK CENTER: BENRMT

CREW SIZE	DURATION	EST.MAN-HRS	RESOURCE DESCRIPTIONS
2	8	16	REMOTE TEAM

EQUIPMENT CRITICAL: *ECA: C2* *IC: N/A*

REQUIRED OPERATIONAL STATUS: *PLANT: ONLINE* *EQUIPMENT: SHUTDOWN*

EQUIPMENT UNDER THIS PM TASK:

BEWD-ZAN-D2900	GAS GENERATOR
BEWE-ZAN-E2900	GAS GENERATOR
BEWF-ZAN-F2900	GAS GENERATOR
BEWG-ZAN-G2900	GAS GENERATOR
BEWH-ZAN-H2900	GAS GENERATOR
BEWJ-ZAN-J2900	GAS GENERATOR
BEWN-ZAN-N2900	GAS GENERATOR
BEWP-ZAN-P2900	GAS GENERATOR

MFGR, INDUSTRY REFERENCES AND ENGINEERING RECOMMENDATION:

- CATTERPILLAR, Model G3304

SPARE PARTS REQUIREMENT:

Item	JDE Stock Item Number	Description	EA
1	54584	Oil filter, CAT 1R-0716	1
2	19942	Spark plugs, Champion RTN 79	4
3	43151	V-Belt, CAT 3S-6272 (4 ea. / 1 Set)	1
4	44413	Gasket cover valve, CAT 8S1606	1

JOB INSTRUCTIONS

MECHANICAL TASKS:

	COMPLETED (YES)	(NO)	
1) Pre-requisite tasks			
• Obtain work permit, review HA/JSA and carry out toolbox meeting.	✓		Remark:
• Coordinate with other teams on the platform to make equipment. available for service.	✓		Remark:
2) Visual Inspection			
• Start engine and run under load.	✓		Remark:
• Visually inspect all accessible parts for fuel, engine oil leak, excessive noise, vibration, loose connections, fittings.	✓		Remark:
• Stop engine and isolate.	✓		Remark:
3) Task to be check			
• Check cooling water tank level and top up if low.	✓		Remark:
• Check cooling hose condition and replace if bad condition.	✓		Remark:
• Check and clean radiator fins.	✓		Remark:
• Check belt tension, sheave, and bearings condition.	✓		Remark:
• Check condition water pump.	✓		Remark:
• Check fuel gas regulator.	✓		Remark:
• Check carburetor linkage.	✓		Remark:
• Check engine oil level and lube oil tank level/top up.	✓		Remark:
• Clean or replace oil breather.	✓		Remark:
• Check all ignition wiring and connectors.	✓		Remark:
• Check condition of coils & leads.	✓		Remark:
• Inspect magneto coupling.	✓		Remark:
• Check the ignition timing BTDC 25° (By timing light).	✓		Remark:
4) Task to be replace			
• Replace belt cooling system.	✓		Remark:
• Change engine lube oil.		✓	Remark: lube oil not on board
• Change engine lube oil filter.		✓	Remark: wait change lube oil
• Replace spark plugs.	✓		Remark:
5) Valve Clearance			Replaced 170CT24 Panya/Nattapong
• Check and replace valve cover gaskets.	✓		Remark:
• Check / adjust valve clearances Inlet Setting. *(0.015")*	✓		Remark:
• Check / adjust valve clearances Exhaust Setting. *(0.030")*	✓		Remark:

6) Engine Compression Test

Cylinder No.	Compression (PSI)	Remark
1	290	
2	290	
3	225	
4	230	

==========

IE TASKS:

1) Visual Inspection

1.1 Control panel & electrical checks:

- Check / clean starter relay contacts. (✓) ( ) Remark:_____
- Check ignition coil, wiring and connectors. (✓) ( ) Remark:_____

2) Task to be check

2.1 Battery & Charger check:

- Check MCCB wiring connections & condition. (✓) ( ) Remark:_____
- Check battery float charging voltage (26-27 VDC) (✓) ( ) Remark: 27V
  - Battery A (13.02-13.5V): 13.5 VDC
  - Battery B (13.02-13.5V): 13.5 VDC
- Check Battery CCA (✓) ( ) Remark:_____
  (Replace if less than 840 CCA for CAT model & 500 CCA for Optima blue top model)
  - Battery A: N/A CCA
  - Battery B: N/A CCA

2.2 Generator & Electrical check:

- Cleanliness, especially inspecting for dusting from vibrating bars. (✓) ( ) Remark:_____
- Migration or deformation of the coil, turns, and insulation in the end winding and slots. (✓) ( ) Remark:_____
- Cracks in end winding copper. (✓) ( ) Remark:_____
- Contamination of end winding insulation. (✓) ( ) Remark:_____
- Dusting or erosion of end winding. (✓) ( ) Remark:_____
- Ventilation obstructions and overheating. (✓) ( ) Remark:_____
- Check ground strap connection. (✓) ( ) Remark:_____
- Check generator wiring connections. (✓) ( ) Remark:_____
- Check space heater is operational. (✓) ( ) Remark:_____
- Check Emergency stop push button. (✓) ( ) Remark:_____
- Check Low EJW level. (✓) ( ) Remark:_____
- Check Low engine oil level, pressure. (✓) ( ) Remark:_____
- Check High engine oil temperature switch. (✓) ( ) Remark:_____
- Check Vibration switch. (✓) ( ) Remark:_____

3) Final Inspection:

Test runs the unit.

- Engine (STOP/START) function test. (✓) ( ) Remark:_____
- Manual start mode, Local panel. (✓) ( ) Remark:_____
- Auto start (CCR, Local HMI). (✓) ( ) Remark:_____
- Check for excessive noise and loose connections. (✓) ( ) Remark:_____

4) Data Record

Item	Description	Reading	Remark
1	Run Hours (Hrs.)	13460	
2	Oil Pressure (PSI)	87	
3	EJW Temperature (F)	174	
4	Oil Temperature (F)	210	
5	Speed (RPM)	1802	
6	Phase A Current	19 A	
7	Phase B Current	16 A	
8	Phase C Current	17 A	
9	Phase A-B = 481 Voltage		
10	Phase A-C = 482 Voltage		
11	Phase B-C = 481 Voltage		
12	Phase A-N = 282 Voltage		
13	Phase B-N = 281 Voltage		
14	Phase C-N = 281 Voltage		
15	Loaded Rating Power (kW)	12	

5) Close Out

- Clean engine/generator package and component. (✓)( ) Remark:_____
- Visual check generator enclosure panels for cracks or damages. (✓)( ) Remark:_____
- Return unit to normal operation. (✓)( ) Remark:_____
- Sign off work permit. (✓)( ) Remark:_____

==========

COMPLETED BY: Anukun / Theerapond DATE: 30/9/24

COMMENT: - Can't replace engine lube oil and filter lube oil due to HDAX-9200 on board wait replace next time at on board agian.

↓ Replaced 170G24 by Panya/Nattapong

SUPERVISOR: [signature], DATE: 19-10-21.

Revision	Date	Reason for Issue/Change	CMOR #	Enter by
1	18-Nov-16	CMO STRATEGY FOR CPP AND LQ	0552/16	[redacted]

JOBCARD NUMBER: **1Y SEWAGE TREATMENT SYSTEM PM**

SKID/EQUIPMENT: BELQ-WS-Q0001 SEWAGE WATER SKID

OPT. SEQUENCE: 10 1Y SEWAGE TREATMENT SYSTEM

WORK CENTER: BENIE

CREW SIZE	DURATION	EST.MAN-HRS	RESOURCE DESCRIPTIONS
2	3	6	BENIE TEAM., BENCHAMAS

EQUIPMENT CRITICALITY: **REQUIRED OPERATIONAL STATUS:**

***ECA:* N/A** ***IC:* N/A** ***PLANT:* N/A** ***EQUIPMENT:* N/A**

MFGR, INDUSTRY REFERENCES AND ENGINEERING RECOMMENDATION:

EQUIPMENT UNDER THIS PM TASK:

1. SW UNIT, MFG; SUGAR LAND
MODEL; 15MXMP
S/N; 08-15MXMP-D015898
TYPE; OMNIPURE

SPARE PARTS AND TOOL REQUIREMENT:

STOCK	DESCRIPTION	PART NUMBER	QTY	UOM

JOB INSTRUCTIONS

TASKS TO BE CARRIED OUT FOR INSPECT AND MAINTENANCE.

*****Please record the actual running data before stop and after running with loaded. *****

MAINTENANCE TASKS:	COMPLETED (YES) (NO)
1) PREPARATION FOR PM TASK ACTIVITIES:	
1.1 COORDINATE WITH OPERATOR AND MECHANIC FOR ANY TASKS TO BE DONE ON THE SEWAGE UNIT.	(✓)( ) REMARKS:_____
1.2 PREPARE SPARE PARTS AND TOOLS.	(✓)( ) REMARKS:_____
1.3 USING PROTECTION EQUIPMENT (PPE),AVOID CONTACT WITH SEWAGE.	(✓)( ) REMARKS:_____
2) VISUAL INSPECTION:	
2.1 CHECK ELECTRICAL AND INSTRUMENT SYSTEMS FOR LOOSE CONNECTIONS,LEAKS OR DAMAGED.	(✓)( ) REMARKS:_____
2.2 BEFORE SHUTDOWN THE UNIT,CHECK FOR UNUSUAL NOISE,VIBRATION ON THE MOTORS OR BLOWER.	(✓)( ) REMARKS:_____
2.3 FEEL WITH HAND ON BOOK CELL,SHOULD BE SLIGHTLY WARM.	(✓)(✓)REMARKS:_____
2.4 CHECK CONTROL PANEL FOR PROPER INDICATION.	(✓)( ) REMARKS:_____
3) FUNCTION TEST AND CHECK CONDITION OF THE FOLLOWING:	
3.1 SURGE TANK (V1):	
LSH-5080,HI-LEVEL AT 28% MACERATOR PUMP ON	(✓)( ) REMARKS:_____
LSL-5080,LO-LEVEL AT 15% MACERATOR PUMP OFF	(✓)( ) REMARKS:_____
LSH-5081,HIGH LEVEL ALARM	(✓)( ) REMARKS:_____

3.2 BOOK CELL:
TSH-5080,HIGH TEMP AL/SD BOOK CELL AT 103 F ( )(✓) REMARKS: Waiting for test after repair book cell.

3.3 EFFLUENT TANK (V2):
PSH-5080,HIGH PRESSURE ALARM AT 2 PSI. (✓)( ) REMARKS:_____
3.4 RECORD BOOK CELL OF THE FOLLOWING:
DC VOLTS 115 / 115 (✓)( ) REMARKS:_____
AMPS. 29.4 / 20.6 (✓)( ) REMARKS:_____

4) ELECTRICAL MOTORS:
TURN-OFF ELECTRICAL POWER AND TAG OUT

4.1 LUBRICATE MOTOR BEARING IF LUBE FITTING PROVIDED. ( )(✓) REMARKS: There is no grease nipple.
4.2 CHECK MOTOR WINDING AND CABLE RESISTANCE, VERIFY GROUND CABLE. (✓)( ) REMARKS:_____
4.3 CHECK MOTOR STARTER AND CONTACTS FOR DEFECTS. (✓)( ) REMARKS:_____
4.4 CHECK MOTOR DRAW CURRENT ON START UP. (✓)( ) REMARKS:_____
ON THE FOLLOWING MOTORS:
A) MACERATOR MOTOR
B) MIXING PUMP MOTOR
C) BLOWER MOTOR

5) GENERAL INSPECTION ON SEWAGE UNIT (MSD):
5.1 DRAIN SEAWATER STRAINER,CLEAN IF DIRTY. (✓)( ) REMARKS:_____
5.2 DRAIN FILTER REGULATOR. (✓)( ) REMARKS:_____
5.3 CHECK EJECTOR AIR FILTER/REGULATOR. (✓)( ) REMARKS:_____
5.4 CHECK THAT VENT PRESSURE IS POSITIVE APPROX.2 WC TO RELIEF GAS FROM (V2) (✓)( ) REMARKS:_____
6) BOOK CELL INSPECTION:
6.1 PERFORM BOOK CELL MANUAL BACK FLUSH BEFORE OPENING. (✓)( ) REMARKS:_____
6.2 ENSURE THAT ELECTRICAL POWER IS TURN OFF AND TAG OUT AND CLOSE ISOLATION VALVES BEFORE OPENING BOTH BOOK CELLS. (✓)( ) REMARKS:_____
6.3 OPEN BOOK CELLS AND CLEAN SOLIDS BUILD UP, CLEAN DEPOSITS FROM TERMINAL ANODES,CATHODES AND BI-POLAR ELECTRODES USING SOFT BRUSH AND WATER. (✓)( ) REMARKS:_____
6.4 CHANGE PARTS,O-RING OR SEALS AS REQUIRED. (✓)( ) REMARKS:_____
6.6 REASSEMBLE BOOK CELL USING PROPER TORQUE ON BOOK CELL BOLTS 10 LB-FT. (✓)( ) REMARKS:_____
7) FINAL CHECK AND RECORDS:
7.1 RESTORE AND OPERATE THE UNIT PER OPERATING PROCEDURES(POSTED ON THE UNIT). (✓)( ) REMARKS:_____
7.2 CHECK FOR LEAKS AND PROPER OPERATION. (✓)( ) REMARKS:_____
7.3 VERIFY AND RECORD BOOK CELLS OF THE FOLLOWING:
DC VOLTS 110 / 110 (✓)( ) REMARKS:_____
AMPS. 28.9 / 20.7 (✓)( ) REMARKS:_____
7.4 RECORD UNIT OPERATING HOUR - (✓)( ) REMARKS:_____

==========

COMPLETED BY: [redacted] / _____ **DATE:** 02 May 25

COMMENT:_____

Performed book cell cleaning, back flush and momentaly test for keep data record.

Committed bipolar plates for replacement due to current unbalance.

SUPERVISOR : [redacted] For IES, **DATE :** 03 May 25

Standard Job Number:

TASK: **001** **2 WEEKLY SEWAGE TREATMENT UNIT PM - INST**

WORK GROUP: **INST**

CREW SIZE	*EST HRS*	*RESOURCE DESC*
03	6	INST TECH. BENCHAMAS

==========

******* JOB INSTRUCTIONS *******

==========

2 WEEKLY SEWAGE TREATMENT UNIT PM - BELQA

INSTRUMENT TASK:

==========

EQUIPMENT UNDER THIS TASK:

1. SW UNIT, MFG; SUGAR LAND
MODEL; 15MXMP
S/N; 08-15MXMP-D015898
TYPE; OMNIPURE

JOB INSTRUCTIONS:

COMPLETED (YES)(NO)

1) PREPARATION FOR PM TASK ACTIVITIES:

1.1 COORDINATE WITH OPERATOR FOR ANY TASKS TO BE DONE ON THE SEWAGE UNIT. (✓)( ) REMARKS:_____

1.2 PREPARE SPARE PARTS AND TOOLS. (✓)( ) REMARKS:_____

1.3 USING PROTECTION EQUIPMENT (PPE),AVOID CONTACT WITH SEWAGE. (✓)( ) REMARKS:_____

2) VISUAL INSPECTION BEFORE UNIT SHUTDOWN:

2.1 CHECK MECHANICAL PARTS,VALVES,FITTINGS FOR ANY LEAKS OR LOOSE CONNECTIONS. (✓)(REMARKS:_____

2.2 OBSERVE CONTROL PANEL MONITOR FOR PROPER FUNCTIONS. (✓)( ) REMARKS:_____

2.3 LISTEN TO ABNORMAL NOISE OF MOTORS,BLOWER PRIOR TO SHUTDOWN THE UNIT. (✓)( ) REMARKS:_____

2.4 FEEL WITH HAND ON BOOK CELLS,BOTH SHOULD BE SLIGHTLY WARM. (✓)( ) REMARKS:_____

2.5 RECORD BOOK CELL OF THE FOLLOWING:

DC VOLTS_____90_____/____90_____ (✓)( ) REMARKS:_____

AMPS. _____24.0__/____23.5_____ (✓)( ) REMARKS:_____

3) FOLLOW UNIT SHUTDOWN AND FLUSHING PROCEDURES:

(POSTED ON THE UNIT)

3.1 PERFORM MANUAL BLOWDOWN SURGE TANK (V1) AND EFFLUENT TANK (V2). (✓)( ) REMARKS:_____

3.2 PERFORM MANUAL BACK FLUSH ON THE BOOK CELL. (✓)( ) REMARKS:_____

4) GENERAL INSPECTION ON SEWAGE UNIT (MSD):

4.1 DRAIN SEAWATER STRAINER,CLEAN IF DIRTY. (✓)( ) REMARKS:_____

4.2 DRAIN FILTER REGULATOR. (✓)( ) REMARKS:_____

4.3 CHECK EJECTOR AIR FILTER/REGULATOR. (✓)( ) REMARKS:_____

4.4 CHECK MACERATOR OIL LEVEL. (✓)( ) REMARKS:_____

5) BOOK CELL INSPECTION:

5.1 PERFORM BOOK CELL MANUAL BACK FLUSH BEFORE OPENING. (✓)( ) REMARKS:_____

5.2 ENSURE THAT ELECTRICAL POWER IS TURN OFF AND TAG OUT AND CLOSE ISOLATION VALVES BEFORE OPENING BOTH BOOK CELLS. (✓)( ) REMARKS:_____

5.3 OPEN BOOK CELL AND CLEAN SOLIDS BUILD UP, CLEAN DEPOSITS FROM TERMINAL ANODES,CATHODES AND BI-POLAR ELECTRODES USING SOFT BRUSH AND WATER. (✓)( ) REMARKS:_____

5.4 CHANGE PARTS,O-RING OR SEALS AS REQUIRED. (✓)( ) REMARKS:_____

5.6 REASSEMBLE BOOK CELLS USING PROPER TORQUE ON BOOK CELL BOLTS 10 LB-FT. (✓)( ) REMARKS:_____

6) FINAL CHECK AND RECORDS:

6.1 RESTORE AND OPERATE THE UNIT PER OPERATING PROCEDURES (POSTED ON THE UNIT). (✓)( ) REMARKS:_____

6.2 CHECK FOR LEAKS AND PROPER OPERATION. (✓)( ) REMARKS:_____

6.3 VERIFY AND RECORD BOOK CELLS OF THE FOLLOWING:

DC VOLTS_____100 / 100_____ (✓)( ) REMARKS:_____

AMPS. _____25.0 /____22.3_____ (✓)( ) REMARKS:_____

6.4 RECORD UNIT OPERATING HOUR____N/A____ ( )(✓)REMARKS:_____

COMPLETED BY_____[redacted]_____**DATE**_26-Nov-25

COMMENT Replaced book cell valve EV07A due to electric actuator malfunction.

Unit normal operation.

Chevron Thailand Exploration and Production

Benchamas MFP : MAWB

Inspected by : [redacted]

MONTHLY PLATFORM INSPECTION CHECK LIST
BENCHAMAS MFP

Date: 16 NOV 25

ITEMS TO BE CHECKED	CONDITION Good	No	WORK REQ.
1. HELIDECK (TOP DECK)			
a. Fire extinguishers	✓		
b. Flood lights working	✓		
c. Wind sock			N/A
d. Personnel basket			N/A
e. Emergency eye wash shower station			N/A
f. Emergency eye wash drum or bottle	✓		
g. Life ring buoy&light		✓	6ชิ้น ผุ
h. Surface clean and nonslip	✓		
i. ESD stations/functional	✓		
j. Gai-Tronic phone working	✓		
k. Gutter drain condition/Gutter drain cap in place	✓		
2. CRANE			
a. Visual check for boom/cab/ropes	✓		
b. Windows/wipers and control locked out	✓		
c. Fire extinguishers	✓		
d. Load Chart/Hand Signal Chart available	✓		
e. Fuel oil leakage	✓		
f. Access ladder/Grating condition	✓		
g. Crane lighting	✓		
3. MEZZANINE DECK			
a. Fire extinguishers	✓		
b. Emergency eye wash drum or bottle	✓		
c. Life ring buoy&Light	–		N/A
d. Access ladder/Grating condition	✓		
4. CONTROL ROOM			
a. General condition/Housekeeping	✓		
b. First Aid Kit	✓		
c. Stretcher	✓		
d. Fire extinguishers	✓		
e. LOTO Equipment/Board	✓		
f. Fire Blanket	✓		
g. Telephone working	✓		
h. Catches/locked on door	✓		
i. sleep bage 2ea ถุงนอน			N/A

ITEMS TO BE CHECKED	CONDITION Good	No	WORK REQ.
5. CELLAR DECK			
a. Fire extinguishers	✓		
b. Emergency eye wash shower station	✓		
c. Emergency eye wash drum or bottle	✓		
d. Breathing Apparatus and Escape set	–		
e. Mercury Spill Kit	–		
f. Chemical PPE and Equipment Box	–		
g. Chemical skid	✓		
h. X-mas tree valves/plugs/fitting	✓		
i. Gauges in good condition	✓		
j. Valve handle condition	✓		
k. Chemical injection pump skid	✓		
l. Check for gas/oil leaks	✓		
m. Access ladder/walking&working surface	✓		
n. Grating condition	✓		
o. Life ring buoy&Light		✓	แบตเตอรี่ LOW 2 ชิ้น ผุ
p. Blow pot condition	✓		
q. Gutter drain condition/Gutter drain cap in place	✓		
r. WHP condition (in/outside, hyd pumps are secured)	✓		
6. SUB-CELLAR DECK			
a. Fire extinguishers	✓		
b. Emergency eye wash drum or bottle	–		
c. Life jackets and Boxes	✓		
d. Life floats		✓	6ชิ้น ผุ ตรงขอบ
e. Life rings buoy & Light		✓	6ชิ้น ผุ
f. Swing rope hanger points&Chains	✓		
g. Safety signs	✓		
h. Gauges&Valve handle condition	✓		
i. Check for gas/oil leaks	✓		
j. Walking&working surface	✓		
k. Grating condition	✓		
7. BOAT LANDING			
a. Swing ropes	✓		
b. Life ring buoys&Light	–	–	N/A
c. Safety signs	–	–	N/A
d. ESD stations/functional	✓		
e. Access ladder/Grating condition	✓		

Note:

Fire extinguinere มีทั้งหมด 9

Fire co2 มี 2

Tolley 2

Production Supervisor : _____

HES Specialist : _____

Chevron Thailand Exploration and Production

Benchamas MFP : BEWN

Inspected by : [redacted]

IONTHLY PLATFORM INSPECTION CHECK LIS
BENCHAMAS MFP

Date: 15 Nov 25

ITEMS TO BE CHECKED	CONDITION Good	No	WORK REQ.
1. HELIDECK (TOP DECK)			
a. Fire extinguishers	✓		
b. Flood lights working	✓		*South side damaged & not work.
c. Wind sock	N/A		
d. Personnel basket	N/A		
e. Emergency eye wash shower station	✓		
f. Emergency eye wash drum or bottle	N/A		
g. Life ring buoy&light	✓		*Need batt 6V. 2ea.
h. Surface clean and nonslip	✓		
i. ESD stations/functional	✓		
j. Gai-Tronic phone working	N/A		
k. Gutter drain condition/Gutter drain cap in place	✓		
2. CRANE			
a. Visual check for boom/cab/ropes	✓		
b. Windows/wipers and control locked out	✓		
c. Fire extinguishers	✓		
d. Load Chart/Hand Signal Chart available	✓		
e. Fuel oil leakage	✓		
f. Access ladder/Grating condition	✓		
g. Crane lighting	✓		
3. MEZZANINE DECK			
a. Fire extinguishers	N/A		
b. Emergency eye wash drum or bottle	N/A		
c. Life ring buoy&Light	N/A		
d. Access ladder/Grating condition	✓		
4. CONTROL ROOM			
a. General condition/Housekeeping	✓		
b. First Aid Kit	✓		
c. Stretcher	✓		
d. Fire extinguishers	✓		
e. LOTO Equipment/Board	✓		
f. Fire Blanket			N/A
g. Telephone working	✓		
h. Catches/locked on door	✓		
i sleep bage 2ea ถุงนอน			N/A

ITEMS TO BE CHECKED	CONDITION Good	No	WORK REQ.
5. CELLAR DECK			
a. Fire extinguishers	✓		
b. Emergency eye wash shower station	✓		
c. Emergency eye wash drum or bottle	✓		
d. Breathing Apparatus and Escape set			N/A
e. Mercury Spill Kit			N/A
f. Chemical PPE and Equipment Box			N/A
g. Chemical skid	✓		
h. X-mas tree valves/plugs/fitting	✓		
i. Gauges in good condition	✓		
j. Valve handle condition	✓		
k. Chemical injection pump skid	✓		
l. Check for gas/oil leaks	✓		
m. Access ladder/walking&working surface	✓		
n. Grating condition	✓		
o. Life ring buoy&Light		✓	Request batt 3 Ea., Cylinder 2 E
p. Blow pot condition	✓		
q. Gutter drain condition/Gutter drain cap in place	✓		
r. WHP condition (in/outside, hyd pumps are secured)	✓		
6. SUB-CELLAR DECK			
a. Fire extinguishers	✓		
b. Emergency eye wash drum or bottle			N/A
c. Life jackets and Boxes	✓		
d. Life floats	✓		
e. Life rings buoy & Light		✓	Request batt 3 Ea.
f. Swing rope hanger points&Chains	✓		
g. Safety signs	✓		
h. Gauges&Valve handle condition	✓		
i. Check for gas/oil leaks	✓		
j. Walking&working surface	✓		
k. Grating condition	✓		
7. BOAT LANDING			
a. Swing ropes	✓		
b. Life ring buoys&Light			N/A
c. Safety signs	✓		
d. ESD stations/functional	✓		
e. Access ladder/Grating condition	✓		

Note:

Production Supervisor : _____

HES Specialist : _____

Chevron Thailand Exploration and Production

Benchamas MFP : LAWE

Inspected by : [redacted]

MONTHLY PLATFORM INSPECTION CHECK LIST
BENCHAMAS MFP

Date: 11 Nov 2005

ITEMS TO BE CHECKED	CONDITION Good	No	WORK REQ.
1. HELIDECK (TOP DECK)			
a. Fire extinguishers	/		
b. Flood lights working	/		
c. Wind sock			N/A
d. Personnel basket			N/A
e. Emergency eye wash shower station			N/A
f. Emergency eye wash drum or bottle			N/A
g. Life ring buoy&light	/		
h. Surface clean and nonslip	/		
i. ESD stations/functional	/		
j. Gai-Tronic phone working	/		
k. Gutter drain condition/Gutter drain cap in place	/		
2. CRANE			
a. Visual check for boom/cab/ropes	/		
b. Windows/wipers and control locked out	/		
c. Fire extinguishers	/		
d. Load Chart/Hand Signal Chart available	/		
e. Fuel oil leakage	/		
f. Access ladder/Grating condition	/		
g. Crane lighting	/		
3. MEZZANINE DECK			
a. Fire extinguishers	/		
b. Emergency eye wash drum or bottle			N/A
c. Life ring buoy&Light			N/A
d. Access ladder/Grating condition	/		
4. CONTROL ROOM			
a. General condition/Housekeeping	/		
b. First Aid Kit	/		
c. Stretcher	/		
d. Fire extinguishers	/		
e. LOTO Equipment/Board	/		
f. Fire Blanket	/		
g. Telephone working	/		
h. Catches/locked on door	/		
i sleep bage 2ea ถุงนอน	/		

ITEMS TO BE CHECKED	CONDITION Good	No	WORK REQ.
5. CELLAR DECK			
a. Fire extinguishers	/		
b. Emergency eye wash shower station	/		
c. Emergency eye wash drum or bottle		/	Damaged
d. Breathing Apparatus and Escape set			N/A
e. Mercury Spill Kit			N/A
f. Chemical PPE and Equipment Box			N/A
g. Chemical skid			N/A
h. X-mas tree valves/plugs/fitting	/		
i. Gauges in good condition	/		
j. Valve handle condition	/		
k. Chemical injection pump skid			
l. Check for gas/oil leaks	/		
m. Access ladder/walking&working surface	/		
n. Grating condition,Check clamp lock,loosen	/		
o. Life ring buoy&Light		/	No have light 1 Ea.
p. Blow pot condition	/		
q. Gutter drain condition/Gutter drain cap in place	/		
r. WHP condition (in/outside, hyd pumps are secured)	/		
6. SUB-CELLAR DECK			
a. Fire extinguishers	/		
b. Emergency eye wash drum or bottle			N/A
c. Life jackets and Boxes	/		
d. Life floats	/		
e. Life rings buoy & Light	/		
f. Swing rope hanger points&Chains	/		
g. Safety signs	/		
h. Gauges&Valve handle condition	/		
i. Check for gas/oil leaks	/		
j. Walking&working surface	/		
k. Grating condition,Check clamp lock,loosen	/		
7. BOAT LANDING			
a. Swing ropes	/		
b. Life ring buoys&Light			N/A
c. Safety signs	/		
d. ESD stations/functional	/		
e. Access ladder/Grating condition	/		

Note: Life ring buoy light 1 Ea., Emergency eye wash drum 1 Ea.

Production Supervisor : _____

HES Specialist : _____

Chevron Thailand Exploration and Production

Benchamas MFP : BEWP

Inspected by : [redacted]

MONTHLY PLATFORM INSPECTION CHECK L
BENCHAMAS MFP

Date: 3. NOV. 2025

ITEMS TO BE CHECKED	CONDITION Good	No	WORK REQ.
1. HELIDECK (TOP DECK)			
a. Fire extinguishers	/		
b. Flood lights working	N/A		
c. Wind sock	N/A		
d. Personnel basket	N/A		
e. Emergency eye wash shower station	/		
f. Emergency eye wash drum or bottle	N/A		
g. Life ring buoy&light	/		
h. Surface clean and nonslip	/		
i. ESD stations/functional	/		
j. Gai-Tronic phone working	N/A		
k. Gutter drain condition/Gutter drain cap in place	/		
2. CRANE			
a. Visual check for boom/cab/ropes	/		
b. Windows/wipers and control locked out	/		
c. Fire extinguishers	/		
d. Load Chart/Hand Signal Chart available	/		
e. Fuel oil leakage	/		
f. Access ladder/Grating condition	/		
g. Crane lighting	/		
3. MEZZANINE DECK			
a. Fire extinguishers	N/A		
b. Emergency eye wash drum or bottle	N/A		
c. Life ring buoy&Light	N/A		
d. Access ladder/Grating condition	/		
4. CONTROL ROOM			
a. General condition/Housekeeping	/		
b. First Aid Kit	/		
c. Stretcher	/		
d. Fire extinguishers	/		
e. LOTO Equipment/Board	/		
f. Fire Blanket	/		
g. Telephone working	/		
h. Catches/locked on door	/		
i sleep bage 2ea ถุงนอน	N/A		

ITEMS TO BE CHECKED	CONDITION Good	No	WORK REQ.
5. CELLAR DECK			
a. Fire extinguishers	/		
b. Emergency eye wash shower station	/		
c. Emergency eye wash drum or bottle	N/A		
d. Breathing Apparatus and Escape set	N/A		
e. Mercury Spill Kit	N/A		
f. Chemical PPE and Equipment Box	N/A		
g. Chemical skid	/		
h. X-mas tree valves/plugs/fitting	/		
i. Gauges in good condition	/		
j. Valve handle condition	/		
k. Chemical injection pump skid	/		
l. Check for gas/oil leaks	/		
m. Access ladder/walking&working surface	/		
n. Grating condition	/		
o. Life ring buoy&Light	/		
p. Blow pot condition	/		
q. Gutter drain condition/Gutter drain cap in place	/		
r. WHP condition (in/outside, hyd pumps are secured)	/		
6. SUB-CELLAR DECK			
a. Fire extinguishers	/		
b. Emergency eye wash drum or bottle	N/A		
c. Life jackets and Boxes	/		
d. Life floats	/		
e. Life rings buoy & Light	/		
f. Swing rope hanger points&Chains	/		
g. Safety signs	/		
h. Gauges&Valve handle condition	/		
i. Check for gas/oil leaks	/		
j. Walking&working surface	/		
k. Grating condition	/		
7. BOAT LANDING			
a. Swing ropes	/		
b. Life ring buoys&Light	/		
c. Safety signs	/		
d. ESD stations/functional	/		
e. Access ladder/Grating condition	/		

Note:

Production Supervisor :

HES Specialist :

Chevron Thailand Exploration and Production

Benchamas MFP : BZhV

Inspected by : [redacted]

MONTHLY PLATFORM INSPECTION CHECK LI
BENCHAMAS MFP

Date: 7.11.2025

ITEMS TO BE CHECKED	CONDITION Good	No	WORK REQ.
1. HELIDECK (TOP DECK)			
a. Fire extinguishers	/		
b. Flood lights working	N/A		
c. Wind sock	N/A		
d. Personnel basket	N/A		
e. Emergency eye wash shower station	N/A		
f. Emergency eye wash drum or bottle	N/A		
g. Life ring buoy&light		/	Battery low 2 Ea
h. Surface clean and nonslip	/		
i. ESD stations/functional	/		
j. Gai-Tronic phone working	N/A		
k. Gutter drain condition/Gutter drain cap in place	/		
2. CRANE			
a. Visual check for boom/cab/ropes	/		
b. Windows/wipers and control locked out	/		
c. Fire extinguishers	/		
d. Load Chart/Hand Signal Chart available	/		
e. Fuel oil leakage	/		
f. Access ladder/Grating condition	/		
g. Crane lighting	/		
3. MEZZANINE DECK			
a. Fire extinguishers	/		
b. Emergency eye wash drum or bottle	N/A		
c. Life ring buoy&Light	N/A		
d. Access ladder/Grating condition	/		
4. CONTROL ROOM			
a. General condition/Housekeeping	/		
b. First Aid Kit		/	
c. Stretcher		/	Missing
d. Fire extinguishers	/		
e. LOTO Equipment/Board	/		
f. Fire Blanket	/		
g. Telephone working		/	Missing
h. Catches/locked on door	/		
i sleep bage 2ea ถุงนอน	N/A		

ITEMS TO BE CHECKED	CONDITION Good	No	WORK REQ.
5. CELLAR DECK			
a. Fire extinguishers	/		
b. Emergency eye wash shower station	/		
c. Emergency eye wash drum or bottle	N/A		
d. Breathing Apparatus and Escape set	N/A		
e. Mercury Spill Kit	N/A		
f. Chemical PPE and Equipment Box	N/A		
g. Chemical skid	/		
h. X-mas tree valves/plugs/fitting	N/A		
i. Gauges in good condition	N/A		
j. Valve handle condition	N/A		
k. Chemical injection pump skid	/		
l. Check for gas/oil leaks	/		
m. Access ladder/walking&working surface	/		
n. Grating condition	/		
o. Life ring buoy&Light		/	Battery low 4 Ea
p. Blow pot condition	/		
q. Gutter drain condition/Gutter drain cap in place	/		
r. WHP condition (in/outside, hyd pumps are secured)	/		
6. SUB-CELLAR DECK			
a. Fire extinguishers	/		
b. Emergency eye wash drum or bottle	N/A		
c. Life jackets and Boxes	/		
d. Life floats	/		
e. Life rings buoy & Light		/	Battery low 3 Ea
f. Swing rope hanger points&Chains	/		
g. Safety signs	/		
h. Gauges&Valve handle condition	/		
i. Check for gas/oil leaks	/		
j. Walking&working surface	/		
k. Grating condition	/		
7. BOAT LANDING			
a. Swing ropes	/		
b. Life ring buoys&Light	/		
c. Safety signs	/		
d. ESD stations/functional	/		
e. Access ladder/Grating condition	/		

Note:

Production Supervisor :

HES Specialist :

Chevron Thailand Exploration and Production

Benchamas MFP : SRWB

Inspected by : [redacted]

MONTHLY PLATFORM INSPECTION CHECK LIST
BENCHAMAS MFP

Date: 09 NOV 2025

ITEMS TO BE CHECKED	CONDITION Good	No	WORK REQ.
1. HELIDECK (TOP DECK)			
a. Fire extinguishers	/		
b. Flood lights working	/		
c. Wind sock	/		
d. Personnel basket	N/A		
e. Emergency eye wash shower station	N/A		
f. Emergency eye wash drum or bottle	/		
g. Life ring buoy&light		/	light was damage<Big>
h. Surface clean and nonslip	/		
i. ESD stations/functional	/		
j. Gai-Tronic phone working	N/A		
k. Gutter drain condition/Gutter drain cap in place	/		
2. CRANE			
a. Visual check for boom/cab/ropes	/		
b. Windows/wipers and control locked out	/		
c. Fire extinguishers	/		
d. Load Chart/Hand Signal Chart available	/		
e. Fuel oil leakage	/		
f. Access ladder/Grating condition	/		
g. Crane lighting	/		
3. MEZZANINE DECK			
a. Fire extinguishers	/		
b. Emergency eye wash drum or bottle	/		
c. Life ring buoy&Light	/		
d. Access ladder/Grating condition	/		
4. CONTROL ROOM			
a. General condition/Housekeeping	/		
b. First Aid Kit	/		
c. Stretcher	N/A		
d. Fire extinguishers	/		
e. LOTO Equipment/Board	/		
f. Fire Blanket	/		
g. Telephone working	/		
h. Catches/locked on door	/		
i sleep bage 2ea ถุงนอน	/		

ITEMS TO BE CHECKED	CONDITION Good	No	WORK REQ.
5. CELLAR DECK			
a. Fire extinguishers	/		
b. Emergency eye wash shower station	/		
c. Emergency eye wash drum or bottle	/		
d. Breathing Apparatus and Escape set	N/A		
e. Mercury Spill Kit	N/A		
f. Chemical PPE and Equipment Box	N/A		
g. Chemical skid	N/A		
h. X-mas tree valves/plugs/fitting	/		
i. Gauges in good condition	/		
j. Valve handle condition	/		
k. Chemical injection pump skid	/		
l. Check for gas/oil leaks	/		
m. Access ladder/walking&working surface	/		
n. Grating condition,Check clamp lock,loosen	/		
o. Life ring buoy&Light	/		
p. Blow pot condition	/		
q. Gutter drain condition/Gutter drain cap in place	/		
r. WHP condition (in/outside, hyd pumps are secured)	/		
6. SUB-CELLAR DECK			
a. Fire extinguishers	/		
b. Emergency eye wash drum or bottle	N/A		
c. Life jackets and Boxes	/		
d. Life floats	/		
e. Life rings buoy & Light	/		
f. Swing rope hanger points&Chains	/		
g. Safety signs	/		
h. Gauges&Valve handle condition	/		
i. Check for gas/oil leaks	/		
j. Walking&working surface	/		
k. Grating condition,Check clamp lock,loosen	/		
7. BOAT LANDING			
a. Swing ropes	/		
b. Life ring buoys&Light	/		
c. Safety signs	/		
d. ESD stations/functional	/		
e. Access ladder/Grating condition	/		

Note: -Light was damaged <Big> for 1 ea.

Production Supervisor : _____

HES Specialist : _____

Chevron Thailand Exploration and Production

Benchamas MFP : BENJ

Inspected by : [redacted]

MONTHLY PLATFORM INSPECTION CHECK LI
BENCHAMAS MFP

Date: 8 / Nov / 25

ITEMS TO BE CHECKED	CONDITION Good	No	WORK REQ.
1. HELIDECK (TOP DECK)			
a. Fire extinguishers	✓		
b. Flood lights working	N/A		
c. Wind sock	✓		
d. Personnel basket	N/A		
e. Emergency eye wash shower station		✓	ไม่มีน้ำ
f. Emergency eye wash drum or bottle	N/A		
g. Life ring buoy&light	✓		
h. Surface clean and nonslip	✓		
i. ESD stations/functional	✓		
j. Gai-Tronic phone working	N/A		
k. Gutter drain condition/Gutter drain cap in place	✓		
2. CRANE			
a. Visual check for boom/cab/ropes	✓		
b. Windows/wipers and control locked out	✓		
c. Fire extinguishers	✓		
d. Load Chart/Hand Signal Chart available	✓		
e. Fuel oil leakage	✓		
f. Access ladder/Grating condition	✓		
g. Crane lighting	✓		
3. MEZZANINE DECK			
a. Fire extinguishers	N/A		
b. Emergency eye wash drum or bottle	N/A		
c. Life ring buoy&Light	N/A		
d. Access ladder/Grating condition	✓		
4. CONTROL ROOM			
a. General condition/Housekeeping		✓	แอร์ไม่เย็น
b. First Aid Kit	✓		
c. Stretcher	✓		
d. Fire extinguishers	✓		
e. LOTO Equipment/Board	✓		
f. Fire Blanket	✓		
g. Telephone working	✓		
h. Catches/locked on door	✓		
i sleep bage 2ea ถุงนอน	N/A		

ITEMS TO BE CHECKED	CONDITION Good	No	WORK REQ.
5. CELLAR DECK			
a. Fire extinguishers	✓		
b. Emergency eye wash shower station		✓	ไม่มีน้ำ
c. Emergency eye wash drum or bottle	✓		
d. Breathing Apparatus and Escape set	N/A		
e. Mercury Spill Kit	N/A		
f. Chemical PPE and Equipment Box	✓		
g. Chemical skid	✓		
h. X-mas tree valves/plugs/fitting	✓		
i. Gauges in good condition	✓		
j. Valve handle condition	✓		
k. Chemical injection pump skid	✓		
l. Check for gas/oil leaks	✓		
m. Access ladder/walking&working surface	✓		
n. Grating condition	✓		
o. Life ring buoy&Light	✓		
p. Blow pot condition	✓		
q. Gutter drain condition/Gutter drain cap in place	✓		
r. WHP condition (in/outside, hyd pumps are secured)	✓		
6. SUB-CELLAR DECK			
a. Fire extinguishers	✓		
b. Emergency eye wash drum or bottle	✓		
c. Life jackets and Boxes	✓		
d. Life floats	✓		
e. Life rings buoy & Light	✓		
f. Swing rope hanger points&Chains	✓		
g. Safety signs	✓		
h. Gauges&Valve handle condition	✓		
i. Check for gas/oil leaks	✓		
j. Walking&working surface	✓		
k. Grating condition	✓		
7. BOAT LANDING			
a. Swing ropes	✓		
b. Life ring buoys&Light	✓	✓	Battery Low 6V 1EA.
c. Safety signs	✓		
d. ESD stations/functional	✓		
e. Access ladder/Grating condition	✓		

Note:

Production Supervisor :

HES Specialist :

Chevron Thailand Exploration and Production

Benchamas MFP : BEN S

Inspected by : [redacted]

MONTHLY PLATFORM INSPECTION CHECK LI
BENCHAMAS MFP

Date: 7 NOV 2025

ITEMS TO BE CHECKED	CONDITION Good	No	WORK REQ.
1. HELIDECK (TOP DECK)			
a. Fire extinguishers	✓		
b. Flood lights working	–		N/A
c. Wind sock	–		N/A
d. Personnel basket	–		N/A
e. Emergency eye wash shower station	–		N/A
f. Emergency eye wash drum or bottle	–		N/A
g. Life ring buoy&light	✓		
h. Surface clean and nonslip	✓		
i. ESD stations/functional	✓		
j. Gai-Tronic phone working	✓		
k. Gutter drain condition/Gutter drain cap in place	✓		
2. CRANE			
a. Visual check for boom/cab/ropes	✓		
b. Windows/wipers and control locked out	✓		
c. Fire extinguishers	✓		
d. Load Chart/Hand Signal Chart available	✓		
e. Fuel oil leakage	✓		
f. Access ladder/Grating condition	✓		
g. Crane lighting	✓		
3. MEZZANINE DECK			
a. Fire extinguishers	N/A		
b. Emergency eye wash drum or bottle	N/A		
c. Life ring buoy&Light	N/A		
d. Access ladder/Grating condition	✓		
4. CONTROL ROOM			
a. General condition/Housekeeping	✓		
b. First Aid Kit	✓		
c. Stretcher	–		
d. Fire extinguishers	–		
e. LOTO Equipment/Board	✓		
f. Fire Blanket	✓		
g. Telephone working	✓		
h. Catches/locked on door	✓		
i. sleep bage 2ea ถุงนอน	✓		

ITEMS TO BE CHECKED	CONDITION Good	No	WORK REQ.
5. CELLAR DECK			
a. Fire extinguishers	✓		
b. Emergency eye wash shower station	✓		
c. Emergency eye wash drum or bottle	✓		
d. Breathing Apparatus and Escape set	N/A		
e. Mercury Spill Kit	N/A		
f. Chemical PPE and Equipment Box	N/A		
g. Chemical skid	✓		
h. X-mas tree valves/plugs/fitting	✓		
i. Gauges in good condition	✓		
j. Valve handle condition	✓		
k. Chemical injection pump skid	✓		
l. Check for gas/oil leaks	✓		
m. Access ladder/walking&working surface	✓		
n. Grating condition	✓		
o. Life ring buoy&Light	✓		
p. Blow pot condition	✓		
q. Gutter drain condition/Gutter drain cap in place	✓		
r. WHP condition (in/outside, hyd pumps are secured)	✓		
6. SUB-CELLAR DECK			
a. Fire extinguishers	✓		
b. Emergency eye wash drum or bottle	N/A		
c. Life jackets and Boxes	✓		
d. Life floats	✓		
e. Life rings buoy & Light	✓		
f. Swing rope hanger points&Chains	✓		
g. Safety signs	✓		
h. Gauges&Valve handle condition	✓		
i. Check for gas/oil leaks	✓		
j. Walking&working surface	✓		
k. Grating condition	✓		
7. BOAT LANDING			
a. Swing ropes	✓		
b. Life ring buoys&Light	N/A		
c. Safety signs	✓		
d. ESD stations/functional	✓		
e. Access ladder/Grating condition	✓		

Note:

Production Supervisor :

HES Specialist :

Chevron Thailand Exploration and Production

Benchamas MFP : BENX

Inspected by : [redacted]

MONTHLY PLATFORM INSPECTION CHECK LIS
BENCHAMAS MFP

Date: 6 NOV 2025

ITEMS TO BE CHECKED	CONDITION Good	No	WORK REQ.
1. HELIDECK (TOP DECK)			
a. Fire extinguishers	✓		
b. Flood lights working	✓		
c. Wind sock	—		N/A.
d. Personnel basket	—		N/A
e. Emergency eye wash shower station		✓	ไม่มีน้ำ
f. Emergency eye wash drum or bottle	—		
g. Life ring buoy&light	✓		
h. Surface clean and nonslip	✓		
i. ESD stations/functional	✓		
j. Gai-Tronic phone working	—		
k. Gutter drain condition/Gutter drain cap in place	✓		
2. CRANE			
a. Visual check for boom/cab/ropes	✓		
b. Windows/wipers and control locked out	✓		
c. Fire extinguishers	✓		
d. Load Chart/Hand Signal Chart available	✓		
e. Fuel oil leakage	✓		
f. Access ladder/Grating condition	✓		
g. Crane lighting	✓		
3. MEZZANINE DECK			
a. Fire extinguishers	✓		
b. Emergency eye wash drum or bottle	✓		
c. Life ring buoy&Light	✓		
d. Access ladder/Grating condition	✓		
4. CONTROL ROOM			
a. General condition/Housekeeping	✓		
b. First Aid Kit	✓		
c. Stretcher	✓		
d. Fire extinguishers	✓		
e. LOTO Equipment/Board	✓		
f. Fire Blanket	✓		
g. Telephone working	✓		
h. Catches/locked on door	✓		
i sleep bage 2ea ถุงนอน	✓		

ITEMS TO BE CHECKED	CONDITION Good	No	WORK REQ.
5. CELLAR DECK			
a. Fire extinguishers	✓		
b. Emergency eye wash shower station	✓		
c. Emergency eye wash drum or bottle	✓		
d. Breathing Apparatus and Escape set	✓		
e. Mercury Spill Kit	✓		
f. Chemical PPE and Equipment Box			
g. Chemical skid	✓		
h. X-mas tree valves/plugs/fitting	✓		
i. Gauges in good condition	✓		
j. Valve handle condition	✓		
k. Chemical injection pump skid	✓		
l. Check for gas/oil leaks	✓		
m. Access ladder/walking&working surface	✓		
n. Grating condition	✓		
o. Life ring buoy&Light	✓	✓	Low Batt 2 ea
p. Blow pot condition			
q. Gutter drain condition/Gutter drain cap in place	✓		
r. WHP condition (in/outside, hyd pumps are secured)	✓		
6. SUB-CELLAR DECK			
a. Fire extinguishers	✓		
b. Emergency eye wash drum or bottle	✓		
c. Life jackets and Boxes	✓		
d. Life floats	✓		
e. Life rings buoy & Light	✓		
f. Swing rope hanger points&Chains	✓		
g. Safety signs	✓		
h. Gauges&Valve handle condition	✓		
i. Check for gas/oil leaks	✓		
j. Walking&working surface	✓		
k. Grating condition	✓		
7. BOAT LANDING			
a. Swing ropes	✓		
b. Life ring buoys&Light	✓		
c. Safety signs	✓		
d. ESD stations/functional	✓		
e. Access ladder/Grating condition	✓		

Note:

Production Supervisor :

HES Specialist :

Chevron Thailand Exploration and Production

Benchamas MFP : BMB

Inspected by : [redacted]

MONTHLY PLATFORM INSPECTION CHECK LIST
BENCHAMAS MFP

Date: 06 NOV 2025

ITEMS TO BE CHECKED	CONDITION Good	No	WORK REQ.
1. HELIDECK (TOP DECK)			
a. Fire extinguishers	/		
b. Flood lights working	/		
c. Wind sock		N/A	
d. Personnel basket		N/A	
e. Emergency eye wash shower station	/		
f. Emergency eye wash drum or bottle	/		
g. Life ring buoy&light	/		
h. Surface clean and nonslip	/		
i. ESD stations/functional	/		
j. Gai-Tronic phone working		N/A	
k. Gutter drain condition/Gutter drain cap in place	/		
2. CRANE			
a. Visual check for boom/cab/ropes	/		
b. Windows/wipers and control locked out		N/A	
c. Fire extinguishers	/		
d. Load Chart/Hand Signal Chart available	/		
e. Fuel oil leakage	/		
f. Access ladder/Grating condition	/		
g. Crane lighting	/		
3. MEZZANINE DECK			
a. Fire extinguishers	/		
b. Emergency eye wash drum or bottle	/		
c. Life ring buoy&Light		N/A	
d. Access ladder/Grating condition	/		
4. CONTROL ROOM			
a. General condition/Housekeeping	/		
b. First Aid Kit	/		
c. Stretcher	/		
d. Fire extinguishers	/		
e. LOTO Equipment/Board	/		
f. Fire Blanket	/		
g. Telephone working	/		
h. Catches/locked on door	/		
i. sleep bage 2ea ถุงนอน		N/A	

ITEMS TO BE CHECKED	CONDITION Good	No	WORK REQ.
5. CELLAR DECK			
a. Fire extinguishers	/		
b. Emergency eye wash shower station	/		
c. Emergency eye wash drum or bottle	/		
d. Breathing Apparatus and Escape set		N/A	
e. Mercury Spill Kit		N/A	
f. Chemical PPE and Equipment Box		N/A	
g. Chemical skid	/		
h. X-mas tree valves/plugs/fitting	/		
i. Gauges in good condition	/		
j. Valve handle condition	/		
k. Chemical injection pump skid	/		
l. Check for gas/oil leaks	/		
m. Access ladder/walking&working surface	/		
n. Grating condition	/		
o. Life ring buoy&Light	-	/	พบว่าเสื่อม Low ทำสี
p. Blow pot condition	/		
q. Gutter drain condition/Gutter drain cap in piece	/		
r. WHP condition (in/outside, hyd pumps are secured)	/		
6. SUB-CELLAR DECK			
a. Fire extinguishers	/		
b. Emergency eye wash drum or bottle		N/A	
c. Life jackets and Boxes	/		
d. Life floats	/		
e. Life rings buoy & Light	/		
f. Swing rope hanger points&Chains	/		
g. Safety signs	/		
h. Gauges&Valve handle condition	/		
i. Check for gas/oil leaks	/		
j. Walking&working surface	/		
k. Grating condition	/		
7. BOAT LANDING			
a. Swing ropes	/		
b. Life ring buoys&Light	-	N/A	
c. Safety signs	-	N/A	
d. ESD stations/functional	/		
e. Access ladder/Grating condition	/		

Note:

Production Supervisor :

HES Specialist :

Chevron Thailand Exploration and Production

Benchamas MFP : BEWH

Inspected by : [redacted]

MONTHLY PLATFORM INSPECTION CHECK LIS
BENCHAMAS MFP

Date: 2 / Nov / 25

ITEMS TO BE CHECKED	CONDITION Good	No	WORK REQ.
1. HELIDECK (TOP DECK)			
a. Fire extinguishers	✓		
b. Flood lights working	✓		
c. Wind sock	N/A		
d. Personnel basket	N/A		
e. Emergency eye wash shower station	N/A		
f. Emergency eye wash drum or bottle	N/A		
g. Life ring buoy&light	✓		Battery Low 6V 1 EA.
h. Surface clean and nonslip	✓		
i. ESD stations/functional	✓		
j. Gai-Tronic phone working	N/A		
k. Gutter drain condition/Gutter drain cap in place	✓		
2. CRANE			
a. Visual check for boom/cab/ropes	✓		
b. Windows/wipers and control locked out	✓		
c. Fire extinguishers	✓		
d. Load Chart/Hand Signal Chart available	✓		
e. Fuel oil leakage	✓		
f. Access ladder/Grating condition	✓		
g. Crane lighting	✓		
3. MEZZANINE DECK			
a. Fire extinguishers	✓		
b. Emergency eye wash drum or bottle	✓		~~Not Water~~
c. Life ring buoy&Light	✓		
d. Access ladder/Grating condition	✓		
4. CONTROL ROOM			
a. General condition/Housekeeping	✓		
b. First Aid Kit	✓		
c. Stretcher	✓		
d. Fire extinguishers	✓		
e. LOTO Equipment/Board	✓		
f. Fire Blanket	✓		
g. Telephone working	✓		
h. Catches/locked on door	✓		
i sleep bage 2ea ถุงนอน	✓		

ITEMS TO BE CHECKED	CONDITION Good	No	WORK REQ.
5. CELLAR DECK			
a. Fire extinguishers	✓		Rust
b. Emergency eye wash shower station	✓		
c. Emergency eye wash drum or bottle	✓		
d. Breathing Apparatus and Escape set	–		
e. Mercury Spill Kit	–		
f. Chemical PPE and Equipment Box	–		
g. Chemical skid	✓		
h. X-mas tree valves/plugs/fitting	✓		
i. Gauges in good condition	✓		
j. Valve handle condition	✓		
k. Chemical injection pump skid	–		
l. Check for gas/oil leaks	✓		
m. Access ladder/walking&working surface	✓		
n. Grating condition	✓		
o. Life ring buoy&Light	✓		Battery lost 1.5V & 6V 1 EA.
p. Blow pot condition	✓		
q. Gutter drain condition/Gutter drain cap in place	✓		
r. WHP condition (in/outside, hyd pumps are secured)	✓		
6. SUB-CELLAR DECK			
a. Fire extinguishers	✓		Rust
b. Emergency eye wash drum or bottle	✓		
c. Life jackets and Boxes	✓		
d. Life floats	✓		
e. Life rings buoy & Light	✓		Battery Low 6V 1 EA
f. Swing rope hanger points&Chains	✓		
g. Safety signs	–		
h. Gauges&Valve handle condition	✓		
i. Check for gas/oil leaks	✓		
j. Walking&working surface	✓		
k. Grating condition	✓		
7. BOAT LANDING			
a. Swing ropes	✓		
b. Life ring buoys&Light	✓		
c. Safety signs	–		
d. ESD stations/functional	✓		
e. Access ladder/Grating condition	✓		

Note:

Production Supervisor :

HES Specialist :

Chevron Thailand Exploration and Production

Benchamas MFP : BEWD

Inspected by : [redacted]

MONTHLY PLATFORM INSPECTION CHECK LI[illegible]
BENCHAMAS MFP

Date: 2 Nov 2025

ITEMS TO BE CHECKED	CONDITION Good	No	WORK REQ.
1. HELIDECK (TOP DECK)			
a. Fire extinguishers	✓		
b. Flood lights working	✓		
c. Wind sock	–		
d. Personnel basket	–		
e. Emergency eye wash shower station	–		
f. Emergency eye wash drum or bottle	–		
g. Life ring buoy&light		✓	light Low Batt 1 ea
h. Surface clean and nonslip	✓		
i. ESD stations/functional	✓		
j. Gai-Tronic phone working	–		
k. Gutter drain condition/Gutter drain cap in place	✓		
2. CRANE			
a. Visual check for boom/cab/ropes	✓		
b. Windows/wipers and control locked out	–		
c. Fire extinguishers	✓		
d. Load Chart/Hand Signal Chart available	✓		
e. Fuel oil leakage	✓		
f. Access ladder/Grating condition	✓		
g. Crane lighting	✓		
3. MEZZANINE DECK			
a. Fire extinguishers	✓		
b. Emergency eye wash drum or bottle	✓		
c. Life ring buoy&Light		✓	light Low Batt 3 ea
d. Access ladder/Grating condition	✓		
4. CONTROL ROOM			
a. General condition/Housekeeping	✓		
b. First Aid Kit	✓		
c. Stretcher	✓		
d. Fire extinguishers	✓	[illegible]	
e. LOTO Equipment/Board	✓		
f. Fire Blanket		✓	ไม่มี
g. Telephone working	✓		
h. Catches/locked on door	✓		
i. sleep bage 2ea ถุงนอน	✓		

ITEMS TO BE CHECKED	CONDITION Good	No	WORK REQ.
5. CELLAR DECK			
a. Fire extinguishers	✓		
b. Emergency eye wash shower station	✓		
c. Emergency eye wash drum or bottle	✓		
d. Breathing Apparatus and Escape set	–		
e. Mercury Spill Kit	–		
f. Chemical PPE and Equipment Box	–		
g. Chemical skid	–		
h. X-mas tree valves/plugs/fitting	✓		
i. Gauges in good condition	✓		
j. Valve handle condition	✓		
k. Chemical injection pump skid	–		
l. Check for gas/oil leaks	✓		
m. Access ladder/walking&working surface	✓		
n. Grating condition	✓		
o. Life ring buoy&Light		✓	Light Low Batt 3 ea
p. Blow pot condition	✓		
q. Gutter drain condition/Gutter drain cap in plece	✓		
r. WHP condition (in/outside, hyd pumps are secured)	✓		
6. SUB-CELLAR DECK			
a. Fire extinguishers	✓		
b. Emergency eye wash drum or bottle	✓		
c. Life jackets and Boxes	✓		
d. Life floats		✓	ไม่มีตาข่าย, ไม้พายหัก
e. Life rings buoy & Light	✓		
f. Swing rope hanger points&Chains	✓		
g. Safety signs	✓		
h. Gauges&Valve handle condition	✓		
i. Check for gas/oil leaks	✓		
j. Walking&working surface	✓		
k. Grating condition	✓		
7. BOAT LANDING			
a. Swing ropes	✓		
b. Life ring buoys&Light	–		
c. Safety signs	–		
d. ESD stations/functional	–		
e. Access ladder/Grating condition	✓		

Note: Top deck - light Low Batt 1 ea ทิศใต้,
Mezzanine deck - light Low Batt 3 ea ทิศเหนือ, กก, ใต้
CONTROL ROOM - Fire Blanket ไม่มี

Cellar deck - Light Low Batt 3 ea ทิศเหนือ, กก, ใต้
Sub cellar deck - Life floats ไม่มีตาข่าย, ไม้พายหัก

Production Supervisor : _____

HES Specialist : _____

Chevron Thailand Exploration and Production

Benchamas MFP : LAWA

Inspected by : [redacted]

MONTHLY PLATFORM INSPECTION CHECK LIS
BENCHAMAS MFP

Date: 3 Nov 25

ITEMS TO BE CHECKED	CONDITION Good	No	WORK REQ.
1. HELIDECK (TOP DECK)			
a. Fire extinguishers	✓		The body is rusted 1 EA.
b. Flood lights working	✓		
c. Wind sock	✓		
d. Personnel basket	N/A		
e. Emergency eye wash shower station	N/A		
f. Emergency eye wash drum or bottle	✓		Not water, lid cannot closed
g. Life ring buoy&light	✓		
h. Surface clean and nonslip	✓		
i. ESD stations/functional	✓		
j. Gai-Tronic phone working	✓		
k. Gutter drain condition/Gutter drain cap in place	✓		
2. CRANE			
a. Visual check for boom/cab/ropes	✓		
b. Windows/wipers and control locked out	✓		
c. Fire extinguishers	✓		
d. Load Chart/Hand Signal Chart available	✓		
e. Fuel oil leakage	✓		
f. Access ladder/Grating condition	✓		
g. Crane lighting	✓		
3. MEZZANINE DECK			
a. Fire extinguishers	✓		
b. Emergency eye wash drum or bottle	✓		Not water (chemical)
c. Life ring buoy&Light	N/A		
d. Access ladder/Grating condition	✓		
4. CONTROL ROOM			
a. General condition/Housekeeping	✓		
b. First Aid Kit	✓		
c. Stretcher	✓		
d. Fire extinguishers	✓		
e. LOTO Equipment/Board	✓		
f. Fire Blanket	✓		
g. Telephone working	✓		
h. Catches/locked on door	✓		
i sleep bage 2ea ถุงนอน	N/A		

ITEMS TO BE CHECKED	CONDITION Good	No	WORK REQ.
5. CELLAR DECK			
a. Fire extinguishers	✓		The body is rusted. 1 EA.
b. Emergency eye wash shower station	✓		
c. Emergency eye wash drum or bottle	✓		Not water
d. Breathing Apparatus and Escape set	N/A		
e. Mercury Spill Kit	N/A		
f. Chemical PPE and Equipment Box	N/A		
g. Chemical skid	✓		
h. X-mas tree valves/plugs/fitting	✓		
i. Gauges in good condition	✓		
j. Valve handle condition	✓		
k. Chemical injection pump skid	✓		
l. Check for gas/oil leaks	✓		
m. Access ladder/walking&working surface	✓		
n. Grating condition	✓		
o. Life ring buoy&Light	✓		
p. Blow pot condition	✓		
q. Gutter drain condition/Gutter drain cap in place	✓		
r. WHP condition (in/outside, hyd pumps are secured)	✓		
6. SUB-CELLAR DECK			
a. Fire extinguishers	✓		
b. Emergency eye wash drum or bottle	N/A		
c. Life jackets and Boxes	✓		
d. Life floats	✓		
e. Life rings buoy & Light	✓		Battery low 2.5V 2 EA.
f. Swing rope hanger points&Chains	✓		
g. Safety signs	✓		
h. Gauges&Valve handle condition	✓		
i. Check for gas/oil leaks	✓		
j. Walking&working surface	✓		
k. Grating condition	✓		
7. BOAT LANDING			
a. Swing ropes	✓		
b. Life ring buoys&Light	N/A		
c. Safety signs	N/A		
d. ESD stations/functional	✓		
e. Access ladder/Grating condition	✓		

Note:

Production Supervisor :

HES Specialist :

Chevron Thailand Exploration and Production

Benchamas MFP : MAWD

Inspected by : [redacted]

ONTHLY PLATFORM INSPECTION CHECK LIS
BENCHAMAS MFP

Date: 3 Nov 2025

ITEMS TO BE CHECKED	CONDITION Good	No	WORK REQ.
1. HELIDECK (TOP DECK)			
a. Fire extinguishers	✓		
b. Flood lights working	✓		
c. Wind sock	–		
d. Personnel basket	–		
e. Emergency eye wash shower station	–		
f. Emergency eye wash drum or bottle	–		
g. Life ring buoy&light		✓	ligh Low Batt 1 ea
h. Surface clean and nonslip	✓		
i. ESD stations/functional	✓		
j. Gai-Tronic phone working	✓		
k. Gutter drain condition/Gutter drain cap in place	✓		
2. CRANE			
a. Visual check for boom/cab/ropes	✓		
b. Windows/wipers and control locked out	–		
c. Fire extinguishers	–		
d. Load Chart/Hand Signal Chart available	✓		
e. Fuel oil leakage	✓		
f. Access ladder/Grating condition	✓		
g. Crane lighting	✓		
3. MEZZANINE DECK			
a. Fire extinguishers	✓		
b. Emergency eye wash drum or bottle	–		
c. Life ring buoy&Light	–		
d. Access ladder/Grating condition	✓		
4. CONTROL ROOM			
a. General condition/Housekeeping	✓		
b. First Aid Kit	✓		
c. Stretcher	✓		
d. Fire extinguishers	✓		
e. LOTO Equipment/Board	✓		
f. Fire Blanket	✓		
g. Telephone working	✓		
h. Catches/locked on door	✓		
i. sleep bage 2ea ถุงนอน	–		

ITEMS TO BE CHECKED	CONDITION Good	No	WORK REQ.
5. CELLAR DECK			
a. Fire extinguishers	✓		
b. Emergency eye wash shower station	✓		
c. Emergency eye wash drum or bottle		✓	ไม่มีฟรี
d. Breathing Apparatus and Escape set	–		
e. Mercury Spill Kit	–		
f. Chemical PPE and Equipment Box	–		
g. Chemical skid	✓		
h. X-mas tree valves/plugs/fitting	✓		
i. Gauges in good condition	✓		
j. Valve handle condition	✓		
k. Chemical injection pump skid	✓		
l. Check for gas/oil leaks	✓		
m. Access ladder/walking&working surface	✓		
n. Grating condition	✓		
o. Life ring buoy&Light		✓	light Low Batt 3 ea
p. Blow pot condition	✓		
q. Gutter drain condition/Gutter drain cap in plece	✓		
r. WHP condition (in/outside, hyd pumps are secured)	✓		
6. SUB-CELLAR DECK			
a. Fire extinguishers	–		
b. Emergency eye wash drum or bottle	–		
c. Life jackets and Boxes		✓	ไม่มีฝาปิด 1 Boxes
d. Life floats	✓		
e. Life rings buoy & Light		✓	light Low Batt 2 ea
f. Swing rope hanger points&Chains	✓		
g. Safety signs	✓		
h. Gauges&Valve handle condition	✓		
i. Check for gas/oil leaks	✓		
j. Walking&working surface	✓		
k. Grating condition	✓		
7. BOAT LANDING			
a. Swing ropes	✓		
b. Life ring buoys&Light	–		
c. Safety signs	–		
d. ESD stations/functional	✓		
e. Access ladder/Grating condition	✓		

Note: Top deck – light Low Batt 1 ea ทิศใต้
Cellar deck – Emergency eye wash drum or bottle ไม่มีฟรี
– light Low Batt 3 ea ทิศใต้ 1 ตะลันตก 2

Sup cellar deck – Life jackets and Boxes ไม่มีฝาปิด 1 Boxes
– light Low Batt 2 ea ทิศใต้ 1 ทิศตะลันตก 1

Production Supervisor : _____

HES Specialist : _____

Chevron Thailand Exploration and Production

Benchamas MFP : BEWY

Inspected by : [redacted]

MONTHLY PLATFORM INSPECTION CHECK LIST
BENCHAMAS MFP

Date: 2 Nov. 25

ITEMS TO BE CHECKED	CONDITION Good	No	WORK REQ.
1. HELIDECK (TOP DECK)			
a. Fire extinguishers	✓		
b. Flood lights working	✓		
c. Wind sock	N/A		
d. Personnel basket	N/A		
e. Emergency eye wash shower station	N/A		
f. Emergency eye wash drum or bottle	✓		
g. Life ring buoy&light	✓		
h. Surface clean and nonslip	✓		
i. ESD stations/functional	✓		
j. Gai-Tronic phone working	✓		
k. Gutter drain condition/Gutter drain cap in place	✓		
2. CRANE			
a. Visual check for boom/cab/ropes	✓		
b. Windows/wipers and control locked out	✓		
c. Fire extinguishers	✓		
d. Load Chart/Hand Signal Chart available	✓		
e. Fuel oil leakage	✓		
f. Access ladder/Grating condition	✓		
g. Crane lighting	✓		
3. MEZZANINE DECK			
a. Fire extinguishers	✓		
b. Emergency eye wash drum or bottle	✓		
c. Life ring buoy&Light	✓		
d. Access ladder/Grating condition	✓		
4. CONTROL ROOM			
a. General condition/Housekeeping	✓		
b. First Aid Kit	✓		
c. Stretcher	N/A		
d. Fire extinguishers	✓		
e. LOTO Equipment/Board	✓		
f. Fire Blanket	✓		
g. Telephone working	✓		
h. Catches/locked on door	✓		
i. sleep bage 2ea ถุงนอน	N/A		

ITEMS TO BE CHECKED	CONDITION Good	No	WORK REQ.
5. CELLAR DECK			
a. Fire extinguishers	✓		
b. Emergency eye wash shower station	✓		
c. Emergency eye wash drum or bottle		✓	Need top up water
d. Breathing Apparatus and Escape set	N/A		
e. Mercury Spill Kit	N/A		
f. Chemical PPE and Equipment Box	N/A		
g. Chemical skid	✓		
h. X-mas tree valves/plugs/fitting	✓		
i. Gauges in good condition	✓		
j. Valve handle condition	✓		
k. Chemical injection pump skid	✓		
l. Check for gas/oil leaks	✓		
m. Access ladder/walking&working surface	✓		
n. Grating condition	✓		
o. Life ring buoy&Light	✓		2 EA lighty. Not work
p. Blow pot condition	✓		
q. Gutter drain condition/Gutter drain cap in place	✓		
r. WHP condition (in/outside, hyd pumps are secured)	✓		
6. SUB-CELLAR DECK			
a. Fire extinguishers	✓		
b. Emergency eye wash drum or bottle	N/A		
c. Life jackets and Boxes	✓		2 boxes
d. Life floats	✓		
e. Life rings buoy & Light	✓		2 EA lighty Not work
f. Swing rope hanger points&Chains	✓		
g. Safety signs	✓		
h. Gauges&Valve handle condition	✓		
i. Check for gas/oil leaks	✓		
j. Walking&working surface	✓		
k. Grating condition	✓		
7. BOAT LANDING			
a. Swing ropes	✓		
b. Life ring buoys&Light	✓		
c. Safety signs	✓		
d. ESD stations/functional	✓		
e. Access ladder/Grating condition	✓		

Note:

Production Supervisor :

HES Specialist :

Chevron Thailand Exploration and Production

Benchamas MFP : BENP

Inspected by : [redacted]

MONTHLY PLATFORM INSPECTION CHECK LIST
BENCHAMAS MFP

Date: 4 Nov 25

ITEMS TO BE CHECKED	CONDITION Good	No	WORK REQ.
1. HELIDECK (TOP DECK)			
a. Fire extinguishers	✓	✓	1ea. 9in crane Activate
b. Flood lights working	✓		
c. Wind sock	NA		
d. Personnel basket	NA		
e. Emergency eye wash shower station	✓		
f. Emergency eye wash drum or bottle	✓		
g. Life ring buoy&light		✓	1 ea Battery low (6V)
h. Surface clean and nonslip	✓		
i. ESD stations/functional	✓		
j. Gai-Tronic phone working	N/A		
k. Gutter drain condition/Gutter drain cap in place	✓		
2. CRANE			
a. Visual check for boom/cab/ropes	✓		
b. Windows/wipers and control locked out	✓		
c. Fire extinguishers	✓		
d. Load Chart/Hand Signal Chart available	✓		
e. Fuel oil leakage	✓		
f. Access ladder/Grating condition	✓		
g. Crane lighting	✓		
3. MEZZANINE DECK			
a. Fire extinguishers	NA		
b. Emergency eye wash drum or bottle	NA		
c. Life ring buoy&Light	NA		
d. Access ladder/Grating condition	✓		
4. CONTROL ROOM			
a. General condition/Housekeeping	✓		
b. First Aid Kit	✓		
c. Stretcher	✓		
d. Fire extinguishers	✓		
e. LOTO Equipment/Board	✓		
f. Fire Blanket	✓		
g. Telephone working	✓		
h. Catches/locked on door	✓		
i sleep bage 2ea ถุงนอน	✓		

ITEMS TO BE CHECKED	CONDITION Good	No	WORK REQ.
5. CELLAR DECK			
a. Fire extinguishers	✓		1ea East side Activate
b. Emergency eye wash shower station	✓		
c. Emergency eye wash drum or bottle	✓		
d. Breathing Apparatus and Escape set	NA		
e. Mercury Spill Kit	NA		
f. Chemical PPE and Equipment Box	NA		
g. Chemical skid	✓		
h. X-mas tree valves/plugs/fitting	✓		
i. Gauges in good condition	✓		
j. Valve handle condition	✓		
k. Chemical injection pump skid	✓		
l. Check for gas/oil leaks	✓		
m. Access ladder/walking&working surface	✓		
n. Grating condition	✓		
o. Life ring buoy&Light		✓	2ea Battery low (6V)
p. Blow pot condition	✓		
q. Gutter drain condition/Gutter drain cap in place	✓		
r. WHP condition (in/outside, hyd pumps are secured)	✓		
6. SUB-CELLAR DECK			
a. Fire extinguishers	✓		
b. Emergency eye wash drum or bottle	N/A		
c. Life jackets and Boxes	✓		
d. Life floats	✓		
e. Life rings buoy & Light		✓	1 EA Battery low (6V)
f. Swing rope hanger points&Chains	✓		
g. Safety signs	✓		
h. Gauges&Valve handle condition	✓		
i. Check for gas/oil leaks	✓		
j. Walking&working surface	✓		
k. Grating condition	✓		
7. BOAT LANDING			
a. Swing ropes	✓		
b. Life ring buoys&Light	✓		
c. Safety signs	✓		
d. ESD stations/functional	✓		
e. Access ladder/Grating condition	✓		

Note: – Fire extinguisher under crane to deck Activate
– Fire extinguisher Cellar deck east side Activate

Production Supervisor : _____

HES Specialist : _____

ภาคผนวก 18

Specification ของแท่นเจาะ

Shelf Drilling Chaophraya

350 Foot Jack-Up Drilling Unit

General Description

Design.....LeTourneau Super 116 E

Year Built.....2016

Hull Dimensions ..... 243 ft. x 206 ft. x 26 ft.

Spud Can Diameter .....50.5 ft.

Legs (3).....477 ft. long square legs

Quarters Capacity ..... 160 persons

Maximum Water Depth .....350 ft.

Cantilever Envelope ..... 70 ft. by 30 ft.

Max Variable Load (drilling).....Approx. 7,700 kips*

**depending on water depth and geographical location*

Drilling Equipment

Derrick	Lee C. Moore bottleneck derrick, 170 ft high with 35 ft x 32 ft base, static hook load capacity 1,500,000 lbs. with fourteen (14) 1-3/4" drilling lines
Drawworks	NOV 1625 UDBE, 3,000 HP, driven by three (3) GE 752 DC motors each rated 1,085 HP continuous, outfitted with a Baylor 7838 auxiliary electric brake
Rotary Table	NOV RST-495, 1,100 short tons, hydraulic with 49-1/2 maximum opening
Top Drive	NOV TDS-8, 750 short tons, with PH-100 pipe-handler
Pipe Handling	Main Well Center: NOV ST-80, PS-21 power slips Offline Stand-building: NOV ST-80, Forum 14K-R Offline Activity Crane
Mud Pumps	Three (3) NOV 14-P-220 triplex mud pumps 2,200 HP, 7500 psi, each pump is driven by two (2) DC motors rated 1,085 HP continuous
Solids Control	Four (4) NOV Brandt VSM 300 balanced elliptical motion shale shakers
Instrumentation	NOV Rig-Sense drilling instrumentation system

Storage Capacities

Liquid Mud ..... 5,200 bbls.

Base Oil..... 980 bbls.

Brine ..... 980 bbls.

Drill Water ..... 19,672 bbls.

Fuel..... 2,100 bbls.

Bulk Material (7 silos) .....12,250 cu.ft.

Sack Storage ..... 5,000 sacks

Power Equipment

Main Power	Five (5) Caterpillar 3516C HD DITA diesel engines each rated at 2,150 HP @ 1,200 rpm and driving Kato 6P63300 1,596 KW AC generators
Power Dist.	Four (4) NOV Bridge SCR and two (2) NOV VFD, 600 V AC
Emer. Power	One (1) Caterpillar 3512C diesel engine rated 1,476 BHP @ 1,200 rpm driving a Kato 1,120 ekW AC generator 1,120

Well Control Equipment

BOP Stack	One (1) Hydril GX 13.5/8" 5K annular preventer and two (2) Cameron Type U 13.5/8" 10K double ram preventers
BOP Handling	Hercu-Link two (2) points hoist system, 50 short tons each

Cranes

Two (2) SEADEEP SH2000-36 electro-hydraulic cranes with 120 ft boom, rated 57.8 short tons @ 25 ft radius; one (1) SEADEEP SH2000-42 electro-hydraulic crane with 140 ft boom, rated 77.3 short tons @ 29.5 ft radius; two (2) Palfinger PK65002MD cranes; Forum 14K-R overhead crane for offline activity.

Special Features

Offline activity including making up drill pipe and casing stands off critical path. Capable for in-field rig move with 600 kips of setback in the derrick. Designed to fill all preload tanks in two hours and one hour to dump.

SHELF DRILLING

These specifications are intended for general reference purposes only, as actual equipment and specifications may vary based upon subsequent changes, the contract situation and customer needs. All equipment shall be operated and maintained at all times, in compliance with Shelf Drilling policies and procedures, and within its stated operational limits or continuous rated capacity, in order to assure maximum operational efficiency.

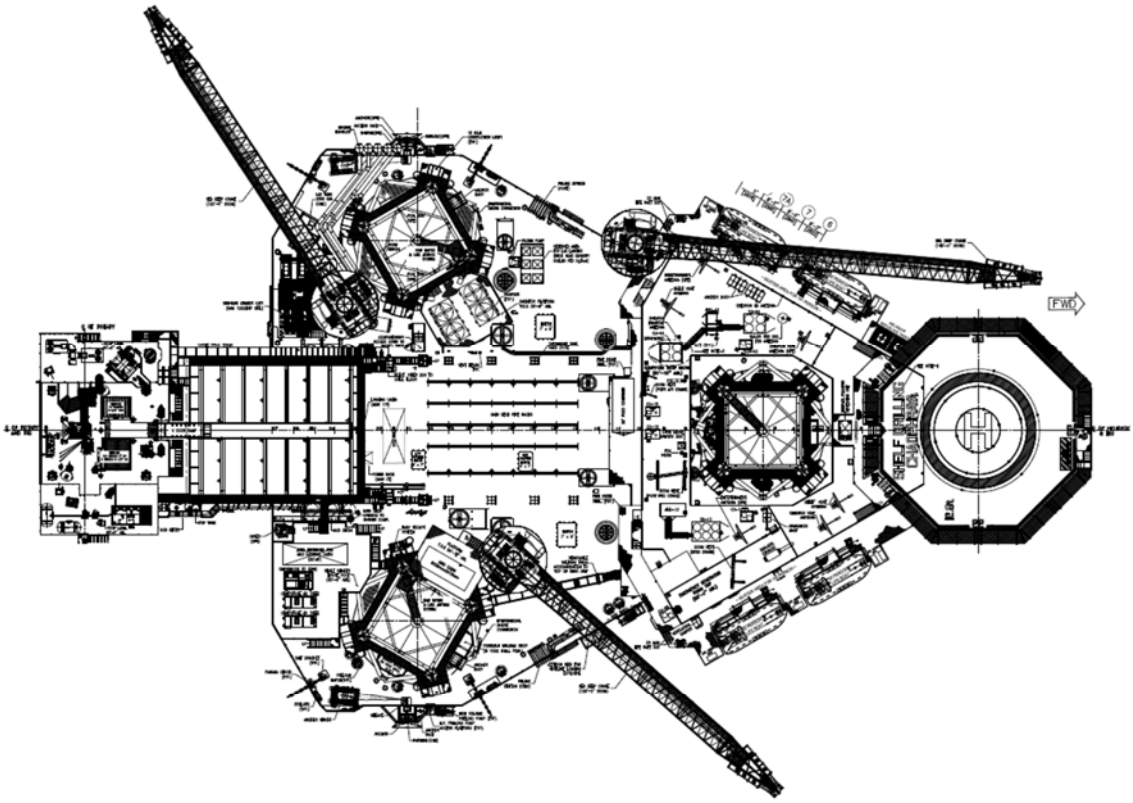

TOP PLAN
SCALE - 1:200

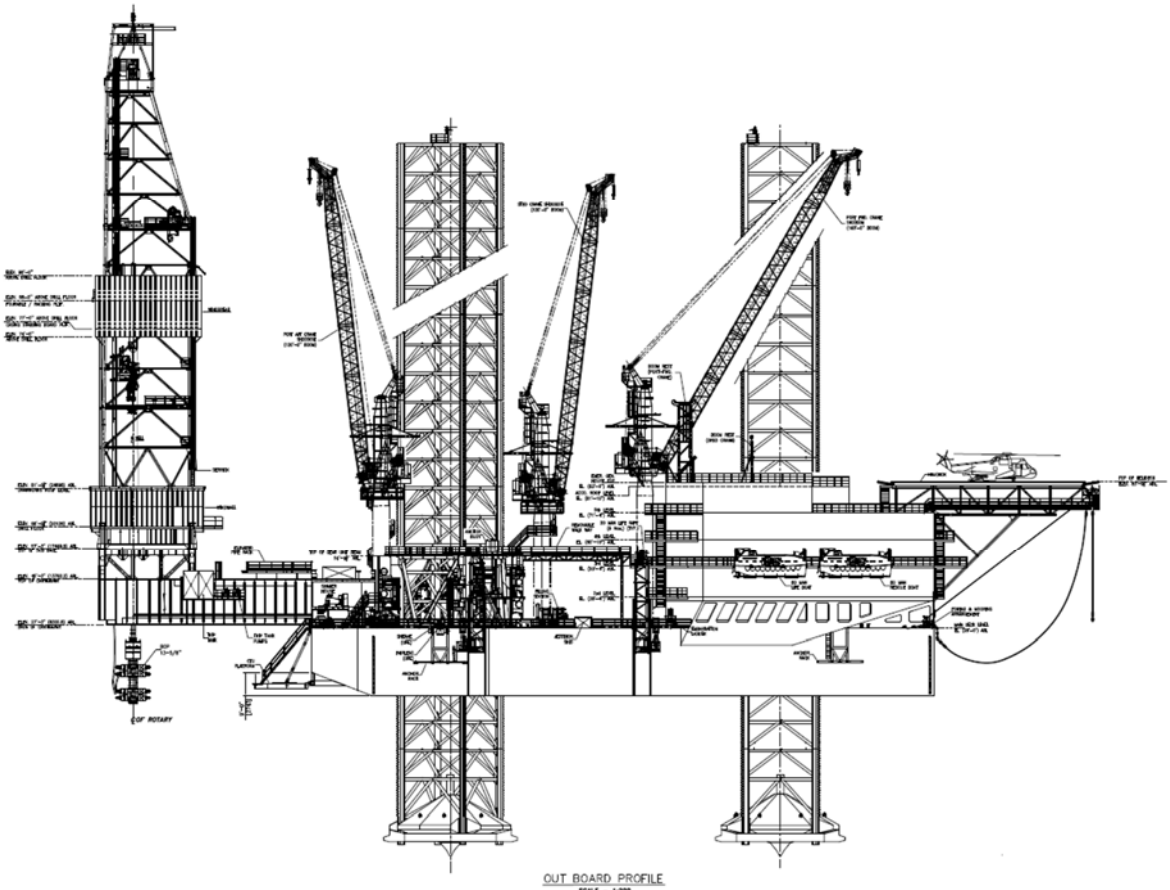

OUT BOARD PROFILE
SCALE - 1:200

Shelf Drilling Chaophraya

R-Mar-2018

These specifications are intended for general reference purposes only, as actual equipment and specifications may vary based upon subsequent changes, the contract situation and customer needs. All equipment shall be operated and maintained at all times, in compliance with Shelf Drilling policies and procedures, and within its stated operational limits or continuous rated capacity, in order to assure maximum operational efficiency.

Shelf Drilling Krathong

350 Foot Jack-Up Drilling Unit

General Description

Design.....LeTourneau Super 116 E

Year Built.....2017

Hull Dimensions ..... 243 ft. x 206 ft. x 26 ft.

Spud Can Diameter .....50.5 ft.

Legs (3).....477 ft. long square legs

Quarters Capacity ..... 160 persons

Maximum Water Depth .....350 ft.

Cantilever Envelope ..... 70 ft. by 30 ft.

Max Variable Load (drilling).....Approx. 7,700 kips*

**depending on water depth and geographical location*

Drilling Equipment

Derrick	Lee C. Moore bottleneck derrick, 170 ft high with 35 ft x 32 ft base, static hook load capacity 1,500,000 lbs. with fourteen (14) 1-3/4" drilling lines
Drawworks	NOV 1625 UDBE, 3,000 HP, driven by three (3) GE 752 DC motors each rated 1,085 HP continuous, outfitted with a Baylor 7838 auxiliary electric brake
Rotary Table	NOV RST-495, 1,100 short tons, hydraulic with 49-1/2 maximum opening
Top Drive	NOV TDS-8, 750 short tons, with PH-100 pipe-handler
Pipe Handling	Main Well Center: NOV ST-80, PS-21 power slips Offline Stand-building: NOV ST-80, Forum 14K-R Offline Activity Crane
Mud Pumps	Three (3) NOV 14-P-220 triplex mud pumps 2,200 HP, 7500 psi, each pump is driven by two (2) DC motors rated 1,085 HP continuous
Solids Control	Four (4) NOV Brandt VSM 300 balanced elliptical motion shale shakers
Instrumentation	NOV Rig-Sense drilling instrumentation system

Storage Capacities

Liquid Mud ..... 5,200 bbls.

Base Oil..... 980 bbls.

Brine ..... 980 bbls.

Drill Water ..... 19,672 bbls.

Fuel..... 2,100 bbls.

Bulk Material (7 silos) .....12,250 cu.ft.

Sack Storage ..... 5,000 sacks

Power Equipment

Main Power	Five (5) Caterpillar 3516C HD DITA diesel engines each rated at 2,150 HP @ 1,200 rpm and driving Kato 6P63300 1,596 KW AC generators
Power Dist.	Four (4) NOV Bridge SCR and two (2) NOV VFD, 600 V AC
Emer. Power	One (1) Caterpillar 3512C diesel engine rated 1,476 BHP @ 1,200 rpm driving a Kato 1,120 ekW AC generator 1,120

Well Control Equipment

BOP Stack	One (1) Hydril GX 13.5/8" 5K annular preventer and two (2) Cameron Type U 13.5/8" 10K double ram preventers
BOP Handling	Hercu-Link two (2) points hoist system, 50 short tons each

Cranes

Two (2) SEADEEP SH2000-36 electro-hydraulic cranes with 120 ft boom, rated 57.8 short tons @ 25 ft radius; one (1) SEADEEP SH2000-42 electro-hydraulic crane with 140 ft boom, rated 77.3 short tons @ 29.5 ft radius; two (2) Palfinger PK65002MD cranes; Forum 14K-R overhead crane for offline activity.

Special Features

Offline activity including making up drill pipe and casing stands off critical path. Capable for in-field rig move with 600 kips of setback in the derrick. Designed to fill all preload tanks in two hours and one hour to dump.

R-Mar-2018

These specifications are intended for general reference purposes only, as actual equipment and specifications may vary based upon subsequent changes, the contract situation and customer needs. All equipment shall be operated and maintained at all times, in compliance with Shelf Drilling policies and procedures, and within its stated operational limits or continuous rated capacity, in order to assure maximum operational efficiency.

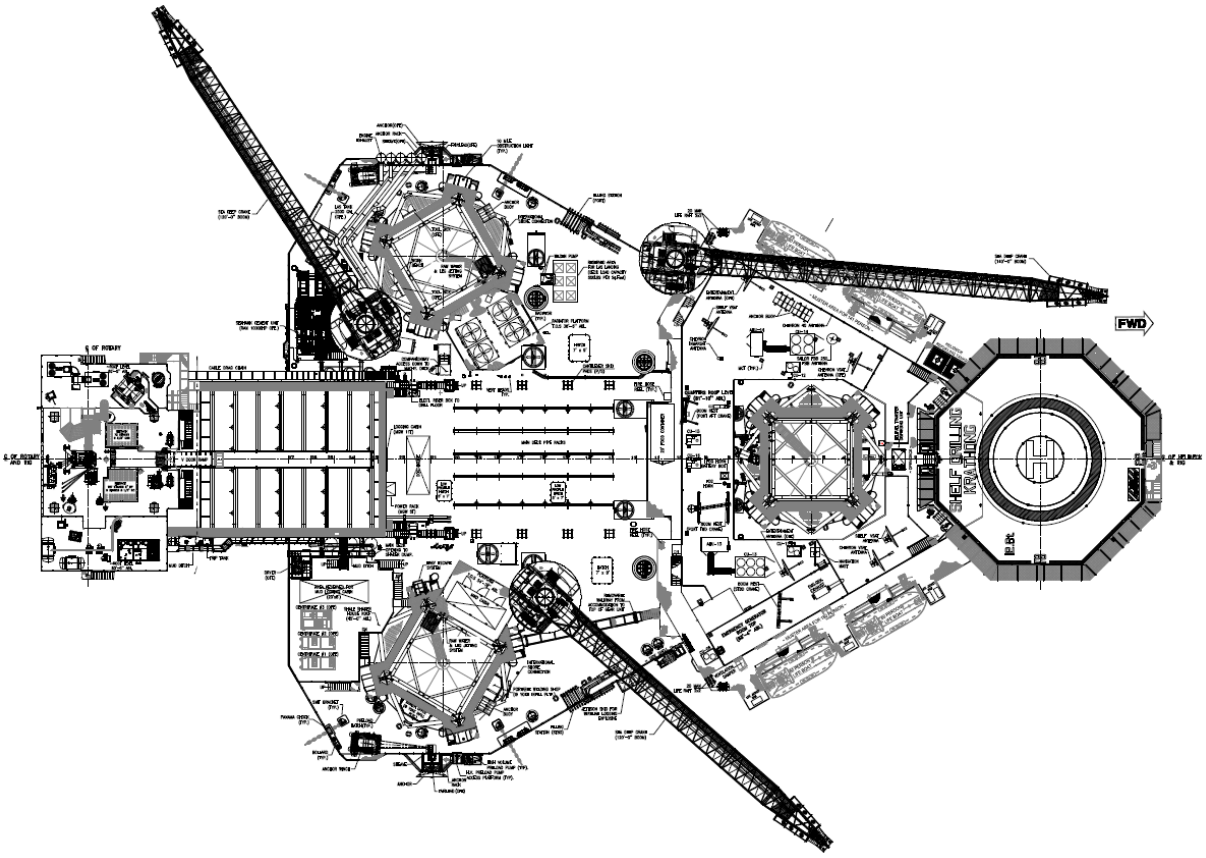

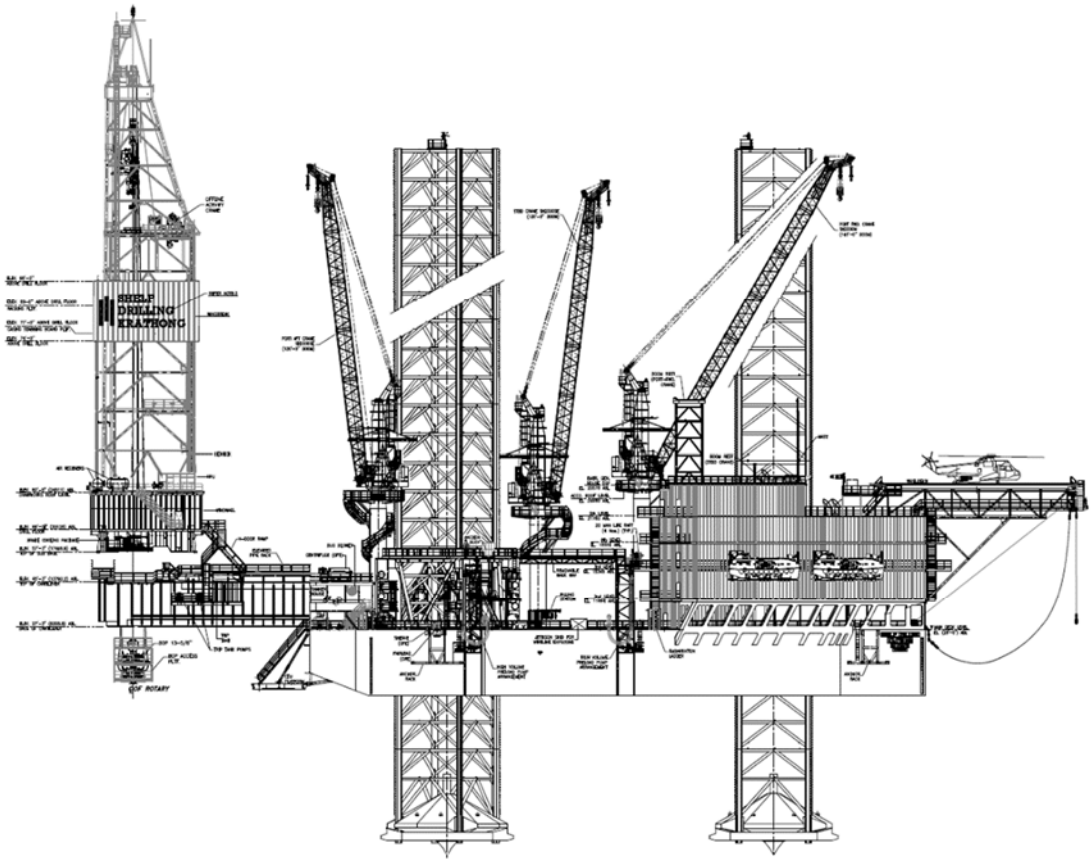

OUT BOARD PROFILE
SCALE – 1:200

Shelf Drilling Krathong

R-Mar-2018

SHELF DRILLING

These specifications are intended for general reference purposes only, as actual equipment and specifications may vary based upon subsequent changes, the contract situation and customer needs. All equipment shall be operated and maintained at all times, in compliance with Shelf Drilling policies and procedures, and within its stated operational limits or continuous rated capacity, in order to assure maximum operational efficiency.

ภาคผนวก 19

รายการอุปกรณ์ตอบสนองต่อการหกรั่วไหลของน้ำมัน (Spill Equipment Inspection)

OSR MONTHLY INSPECTION

Container / Basket Detail	***OSRE-1A** consist ; Oil Skimmer Equipment. (New unit replaced 10 Oct 25) ***OSRE-2A** consist ; Boom Equipment. (New unit replaced 10 Oct 25) CR-6006 consist ; Dispersant Spray unit (Old unit) CR-6049 consist ; Boat spray equipment. CR-2866 consist ; Boat spray equipment. BE-1013 consist ; Chemical EC9500A 2 drums + Slickgone NS 4 drums BE-1014 consist ; Chemical Slickgone NS 6 drums. CR-6779 consist ; Chemical EC9500A 3 drums + slickgone NS 1 drums. CR-7002 consist ; Chemical EC9500A 2 drums+ slickgone NS 2 drums. CR-6767 consist ; Chemical EC9500A 3 drums+ slickgone NS 1 drums. CR-7055 consist ; Empty basket for Backpack Inflator.

Date : 22 Dec 2025	**W/O: 1268705**	**Tasks: PM 1M Schedule**	**By:Winai B./Boonchai K.**	**Location: BEWT**	**Follow Up Action**	**Completed (By / Date)**
Item	Equipment	Description	Remark / Comment	Photo		
1	Chemical	Slickgone NS 14 drums ; EC9500A 10 drums	Proper condition.	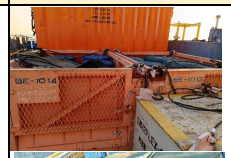		
2	Oil Skimmer Equipment	Centrifugal Pump (LAMOR ; Model LWP-D-15LP)	Inspected all engine condition and Test run found satisfied.			
3	Oil Skimmer Equipment	Hydraulic Power Pack (LAMOR ; Type LPP ; Model 36L/38 cc.)	Inspected all engine condition and Test run found satisfied.			

4	Oil Skimmer Equipment	Oil Skimmer connected with pump (LAMOR)	Proper condition.			
5	Oil Skimmer Equipment	Portable Lifting Equipment	Proper condition.	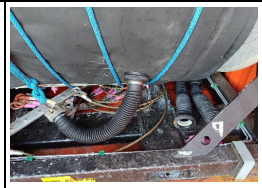		
6	Boom Equipment	Boom on Reel Drum	Boom good condition.			
7	Boom Equipment	Backpack Inflator (LAMOR ; Type DAB ; Model 200)	Inspected all engine condition and Test run found satisfied.			

8	Boom Equipment	Hydraulic Power Pack (LAMOR ; Type LPP ; Model 7HA/B8)	Inspected all engine condition and Test run found satisfied.			
9	Dispersant Spray Equipment	High Pressure Engine/Pump (HATZ ; Model 1B20)	Inspected and test run engine found normal. As found door can't lock next PM please check and repair the door.			
10	Boat Spray Equipment	High Pressure Engine/Pump (Model 100-TS) S/N : OP 4158 , S/N : OP 4166	Inspected engine condition and Test run found satisfied.			
11	OSR Unit	Over view of all equipment.	Layout location of OSR on BEWT			
12	Crane	Last PM Crane BEWN	1Y PM On 9 Apr 25			

SOPEP Equipment (In SOPEP Store)

NO	EQUIPMENT	QTY	REMARKS
1	PORTABLE PUMPS (WILDEN PUMP), SIZE: 8	2 pcs	
2	ECO WASH	4 DRUM	
	DEGREASER	200 Ltr	
3	OIL OBSERBENT MATERIALS		
	1) BOOMS	30 KG	
	2) SHEETS (100 sheet / bag)	16 BOX	Rcvd 10 bag on 6 Jul 25
4	PORTABLE SAVEALLS		
	1) 200 LITRE DRUMS FOR COLLECTING OILS	6 DRUM	
5	PLASTIC SHOVELS	6 PCS	
6	SOOP SQUARE NON-SPARK (HAND SCOOP)	6 PCS	
7	SCUPPER PLUGS- WITH 50% SPARE	10 PCS	
8	BOOTS RUBBERS, SIZE: 5	8 PAIR	
9	OIL RESISTANT GLOVES	3 SETS	
10	CEMENT	3 BAG	
11	SAND	50 KG	
12	RUBBER BUCKETS, 10 LTR	4	
13	ADDITIONAL : CHEM KLEEN	80 LITRES	
14	ADDITIONAL : OIL SKIN SUITS- TYVEX	50 PCS	
15	ADDITIONAL : SPILL KIT	1 BUCKET	
16	HEAVY DUTY PLASTIC BAG	9 BAG	
17	SAW DUST	10 BAG	
18	EMERGENCY SPILL KIT	2 BAG	
19	COTTON RAG, 50kg/BAG	4 BAG	
20	COTTON RAG, 25kg/BAG	10 BAG	Rcvd 12 bag on 6 Jul 25
20	BRUSH SWEEP W/HAIR MIS PLASTIC	6 PCS	
21	HANDLE ALUMI W/SCRW THREAD VIKAN	6 PCS	
22	YACHT MOP	6 PCS	
23	GOGGLE SOFT FRAME SIGHTGARD IV	3 PCS	
24	DENSON TAPE 50mm X 10mtr	60 ROLL	
25	PORTABLE PUMPS (WILDEN PUMP), SIZE: 4	3 PCS	
26	SQUEEGEE RUBBER HANDLED	6 PCS	
27	LONG HANDLED BROOMS	6 EA	Rcvd 9 Oct 2025

28	Dustpan with holder	6 EA	Rcvd 9 Oct 2025

UPDATED: 1 Dec 25

Inventory for Movable Spill Kit

Department : Marine

Item no.	Description	Quantity
1	Oil Absorbent Boom (length 2.5 m)	2 ea
2	Cotton Rags (20 kg)	1 bag
3	Saw Dust (25 kg)	2 bags
4	Absorbent Sheet (Oil only)	25 sheet
5	Corn Broom	1 ea
6	Mop	1 ea
7	Rubber Squeegee	1 ea
8	Plastic Bag	1 pack
9	Dust pan (Plastic Flat)	1 ea
10	Dust pan (Lobby)	1 ea

Update 1 Dec 2025

ภาคผนวก 20

บันทึกรายชื่อและปริมาณการจัดเก็บสารเคมี (Chemical Inventory)

Location	Chemical		Tank No.	Pump Type.	Pump No.	Inject Location	Previous Check Date	Stock (USG)	Lastest Check Date	Stock (USG)	Actual Injection Rate (USG/D)	Recommended Injection Rate (USG/D)	Day Left (Day)	Next Top Up Date	Total Stock Onboard (USG)	Remark
BUK	CRW323	Corrosion Inhibitor	50 ppm				16-Mar-25		12-May-25						0	
	PAO50283	Paraffin Inhibitor	20gal/200bbl(Nalco)												1024	
	PAO50283	Paraffin Inhibitor	197027					530		514						
	PAO50283	Paraffin Inhibitor	COTL-020					530		510						
	XC31550	Biocide	Rate (350ppm/2000 bbls) x 4 hr												0	
	XC31550	Biocide	529333							530						530 gal arrived Sep 17
	XC80105	Biocide	Rate (350ppm/2000 bbls) x 4 hr												0	
	XC31550	Biocide	212177							530						530 gal arrived Sep 17
BEPP	Benchamas central Platform															
	CRO80157	Corrosion Inhibitor	112100	Electric Pump	0.25-1 L/ MMSCF(100 MM = 100 L or 26 G/D)	Upstream compressor	30-Nov-25	200	3-Dec-25	431	12	12	36	7-Jan-26	431	Day Tank
	CRO80157	Corrosion Inhibitor	157670					264		0						530 gal arrived Oct 07
	CRO80157	Corrosion Inhibitor	712483													
	DMO87023	Demulsifier	COTL-002	William pump		Upstream LP slug cather		378		330	18	20	18	21-Dec-25	330	Day Tank
	DMO87023	Demulsifier	12-1													
	~~DMO87023~~	~~Demulsifier~~	~~529352~~					~~0~~		~~0~~						~~530 gal arrived Oct 14~~
	CRW323	Corrosion Inhibitor		Electric Pump		BEPP					0	10	0	14-May-25	0	
	DFO80257	De-Foamer	163284	Electric Pump		Upstream LP Separator		440		396	19	20	35	6-Jan-26	660	Day Tank
	DFO80257	De-Foamer	163287					264		264						530 gal arrived Nov26
	DFO80257	De-Foamer	112961													
	DFO80257	De-Foamer	157655					0		0						
	~~DFO80257~~	~~De-Foamer~~	~~197033~~													~~530 gal arrived Nov 05~~
	RBW700	Water Clarifier	712486	Electric Pump		Outlet LP sep to Flash vessel		334		277	20	20				
	RBW700	Water Clarifier	151285					264		264			449		449	530 gal arrived Oct 07
	RBW700	Water Clarifier	COTL-011													530 gal arrived Nov 11
	SCW85763	Scale Inhibitor	157683	Electric Pump		Downstream filter booter pump to BEWA		202		185	10	10				
	SCW85763	Scale Inhibitor	197035										0		0	
	~~XC80105~~	~~Biocide~~	~~157675~~					~~490~~		~~490~~						
	XC80105	Biocide	106 pails													530 gal arrived May 21
	TEG	Glycol	COTL-008					530		530						
	TEG	Glycol	113454					530		530						530 gal arrived Sep 03
	TEA 99 (EC1005A)	Triethanolamine	drum	Upstream glycol contractor		Nalco										530 gal arrived Oct 07
	DFW82243	Antifoam for Glycol	drum	pstream glycol pump surge tank		Baker Hughes										liter for adjuts to High pH of TEG
																2 drums, 1 gal/week (batch injection) or if r
	Hub Platform															
BEWA	CRW323	Corrosion Inhibitor		PWIP S/D at BEWB Trial	Inlet surge drum (old injection point)	inject to BEWC LP gas incomin	45991		45994		0	0				
													0		378	Day Tank
	DFO80257	De-Foamer	112896	Checkpoint		Inlet FWKOD		202		378	30	30				
	DFO80257	De-Foamer	212178					264		0			282		282	Day Tank
	DFO80257	De-Foamer	529344													530 gal arrived Nov 11
	DFO80257	De-Foamer	712474													
	DMO87023	Demulsifier	COTL-023	Checkpoint		Inlet header before FWKOD and header		378		282	40	30				
	DMO87023	Demulsifier	112914	from BEWX				530		530			1060		1060	Day Tank
	DMO87023	Demulsifier	113282	from BEWJ				530		530						530 gal arrived Nov 26
	DMO87023	Demulsifier	12-1													530 gal arrived Nov 26
	RBW700	Water Clarifier		Checkpoint		Inlet FWKOD					0	21.03705626				
													0		0	Day Tank
	XC31550	Biocide		Checkpoint		Suction water injection		0		0						
															0	Day Tank
	XC80105	Biocide		Checkpoint		Suction water injection		0		0	0	30				
	XC80105	Biocide	529343	from LAWC				440		440			440	27-May-25	440	

BEWB	Hub Platform															
	CRW323	Corrosion Inhibitor	3-27	Checkpoint		wellhead and pw re-injection	21-Nov-25		29-Nov-25		0	0	0		0	Day Tank
	DMO87023	Demulsifier	112946	Checkpoint		LP header before LP sep (Mix with BEWW product)		95		265	27	27	20	18-Dec-25	530	Day Tank
	DMO87023	Demulsifier	COTL-017					95		265						Day Tank
	DMO87023	Demulsifier	12-1													
	DMO87023	Demulsifier	12-1													
	~~DMO87023~~	~~Demulsifier~~	~~113274~~					~~LQ~~		~~0~~						~~530 gal arrived Nov 18~~
	RBW80122	Water Clarifier		Checkpoint		LP header before inlet LP sep					0	9	0		0	Day Tank
	SCW85763	Scale Inhibitor	COTL-007	Checkpoint		Water outlet LP separator		415		415	5	5	83	20-Feb-26	415	Day Tank
	SCW85763	Scale Inhibitor	138134					132		132						530 gal arrived Oct 29
	XC31550	Biocide		Checkpoint		Water outlet degassing and LP							0			Day Tank
	XC31550	Biocide	157674					334		334						
	XC80105	Biocide		Checkpoint		Water outlet degassing and LP							0			Day Tank
BEWC	Hub Platform															
	CRW323	Corrosion Inhibitor		Checkpoint	Stop on Aug 15,2024	wellhead and pw re-injection	28-Nov-25		3-Dec-25		0	0	0		0	Day tank
	DMO87023	Demulsifier	163278	Williams		BEWE/ MAWD Receiver		400		167	20	25	8	11-Dec-25	167	Day Tank
	DMO87023	Demulsifier	197029													
	DMO87023	Demulsifier	11-4													
	DMO87023	Demulsifier	12-1													
	RBW80122	Water Clarifier		Checkpoint		inlet LP sep		0		0	0	8	0		0	Day Tank
	SCW85763	Scale Inhibitor	197031	Williams		water outlet LP separator		160		160	6	5	115	28-Mar-26	690	Day Tank
	SCW85763	Scale Inhibitor	197022	from BEWG				530		530						
	XC31550	Biocide		Checkpoint				~~0~~		~~0~~			0		0	Day Tank
	XC80105	Biocide		Checkpoint									0		0	
	XC80105	Biocide	712477					300		300						
	DFO80257	De-Foamer		Inject to LP Sep	At 200 ppm 42 GPD (help PLF of BEWV, NJWA)							~~42~~				
BEWD	Stage I	Water injection P/F	Active status													
	CRW323	Corrosion Inhibitor		Electric Pump	PBB8146	wellhead,Prod.Header	1-Aug-18	176	2-Feb-19		0	0	0		0	Pump Off
	CRW323	Corrosion Inhibitor	112957							176						
BEWE	Stage I	Production P/F	Active status													
	CRW323	Corrosion Inhibitor	189916	Checkpoint 1500	N/A	P/L #1 (LP)	20-Oct-25	352	23-Oct-25	325	6	6	54	16-Dec-25	325	Pump On
	CRW323	Corrosion Inhibitor	197026							A						530 gal arrived Nov 26
	DMO87023	Demulsifier	COTL-013	Checkpoint 1500		P/L #2		132		440	10	10	44	6-Dec-25	440	Pump On
	DMO87023	Demulsifier	157664							A						530 gal arrived Nov 26
	~~DMO87023~~	~~Demulsifier~~	~~529353~~					~~325~~		~~0~~						
BEWF	Stage II	Production P/F	Active status													
	CRW323	Corrosion Inhibitor	Belly tank	LEWA Diaphram	PBB8415	Prod.Header,LP Header	14-Oct-23	408	17-Oct-25	408	0	0	408		408	Pump Off
	DMO32112	Demulsifier	Belly tank					408		180	0	0	180		180	Pump Off
	Empty Tank	Lube oil	529331													
BEWG	Stage I	Production P/F	Active status													
	CRW323	Corrosion Inhibitor		Electric Pump		wellhead,Prod.Header	12-Oct-19	0	8-Jul-25	0	0	0	0		0	Pump Off
	CRW323	Corrosion Inhibitor	712484					260		260						Color code :Y / No sling
BEWH	Stage I	Production P/F	Active status													
	CRW323	Corrosion Inhibitor		Electric Pump		wellhead,Prod.Header	22-Jan-18	250	15-Jul-18	0	0	0.0	0		0	Pump Off
	CRW323	Corrosion Inhibitor	157662							350						Color code :Y / Degrade
													0		0	Pump Off
BEWJ	Stage II	Production P/F(GLC)	Active status													
	CRW323	Corrosion Inhibitor	151303	LEWA Diaphram	PBB8415	LLP Header	20-Nov-25	150	29-Nov-25	120	24	24.9	27	26-Dec-25	650	Pump On

	CRW323	Corrosion Inhibitor	712471					A		530						530 gal arrived Nov 26
	~~CRW323~~	~~Corrosion Inhibitor~~	~~112677~~					~~0~~		~~0~~						~~530 gal arrived Sep 10~~
	~~CRW323~~	~~Corrosion Inhibitor~~	~~712465~~					~~114~~		~~0~~						~~530 gal arrived Oct 14~~
	DMO87023	Demulsifier	189909	LEWA Diaphram	PBB8420A	LP Header		115		265	31	32	17	16-Dec-25	530	Pump On
	DMO87023	Demulsifier	120624					115		265						
	DMO87023	Demulsifier	12-1													
	DMO87023	Demulsifier	12-1													
	~~DMO87023~~	~~Demulsifier~~	~~134769~~					~~530~~		~~0~~						~~530 gal arrived Nov 18~~
	PAO50283	Paraffin Inhibitor	157661	LEWA Diaphram	PBB8420	LP Header		214		480	27	27	23	22-Dec-25	630	Pump On
	PAO50283	Paraffin Inhibitor	COTL-021					530		150						530 gal arrived Nov 05
	PAO50283	Paraffin Inhibitor	189914													
	~~PAO50283~~	~~Paraffin Inhibitor~~	~~529332~~					~~176~~		~~0~~						
	PAO85605	Paraffin Dispersant	112965					405		405						
BEWK	**Stage II**	**AR**	**Inactive status**													
	CRW323	Corrosion Inhibitor	Belly tank	LEWA Diaphram	PBB8415	IP Header	13-Dec-20	50	16-Feb-24	50	0	0	50		50	Pump Off
	PAO50283	Paraffin Inhibitor	Belly tank	LEWA Diaphram	PBB8420	BC HDR		135		135	0	10	135		135	Pump Off
BNWL	**Stage II**	**AR**	**Inactive status**													
	CRW323	Corrosion Inhibitor	Belly tank	LEWA Diaphram	PBB8415B	LP Prod.Header	21-Apr-19	387	6-Jan-24	387	0	0	387		387	Pump Off
	DMO32112	Demulsifier	Belly tank	LEWA Diaphram	PBB8440	LP Prod.Header		60		60	0	0	60		60	Pump Off
	PAO50283	Paraffin Inhibitor	Belly tank	LEWA Diaphram	PBB8435	LP Prod.Header		200		200	0	0	200		200	Pump Off
	PAO50283	Paraffin Inhibitor	Belly tank													
BEWN	**Stage II**	**Production P/F(GLC)**	**Active status**													
	CRW323	Corrosion Inhibitor	Belly tank	LEWA Pump	PBB8440	Prod. Header	15-Nov-25	540	28-Nov-25	540	0	3	540		540	Pump Off
	CRW323	Corrosion Inhibitor	178073	fix water with CRW24830 6 litres				272		272						530 gal arrived May 01
	DMO32112	Demulsifier	Belly tank	LEWA Pump	PBB8415	Prod. Header		105		105	0	0	105		105	Pump Off
	EC1118A	Corrosion Inhibitor	113277													
	Empty Tank	Lube oil	529342													
BEWO	**Stage III**	**Production P/F(GLC)**	**Active status**													
	CRW323	Corrosion Inhibitor	Belly tank	Checkpoint Series 1250	P-8415A	Prod Header(XCI-001)	20-Nov-25	277	28-Nov-25	200	13	12.9	56	23-Jan-26	730	Pump On
	CRW323	Corrosion Inhibitor	157687					530		530						530 gal arrived Nov 18
	DMO87023	Demulsifier	Belly tank	Checkpoint Series 1250	P 8440A/B	Export P/L (XCI-002)		0		0	0	10	0		0	Pump Off
	PAO50283	Paraffin Inhibitor	Belly tank	Checkpoint Series 1250	P-8420A	Export P/L (XCI-003)		198		198	0	10	198		198	Pump Off
	CRW24830	Cocktail	712481	day tank				176		176						
	CRW24830	Cocktail	157678					178		178						
	CRW24830	Cocktail	COTL-019					530		530						
	CRW24830	Cocktail	163282					220		220						
	CRW24830	Cocktail	712482					272		272						
	CRW24830	Cocktail	712478					530		530						
	CRW24830	Cocktail	178071	from BEWI				220		220						530 gal arrived Aug 20
	CRW24830	Cocktail	COTL-005	from BEWI				530		530						530 gal arrived Aug 20
	SCW85763	Scale inhibitor	197031					530		530						530 gal arrived Oct 29
BEWP	**Stage II**	**Production P/F(GLC)**	**Active status**													
	CRW323	Corrosion Inhibitor	Belly tank	Electric Pump	PBB8415B	Prod.Header	24-Nov-25	292	28-Nov-25	238	14	13.4	43	9-Jan-26	599	Pump On
	CRW323	Corrosion Inhibitor	157658	move to MAWH				361		361						530 gal arrived Oct 14
	~~CRW323~~	~~Corrosion Inhibitor~~	~~125583~~					~~0~~		~~0~~						~~530 gal arrived Aug 20~~
	DMO87023	Demulsifier	Belly tank /ABJ 1006	Electric Pump	PBB8440	Prod.Header		530		496	10	14	50	16-Jan-26	496	Pump On
	DMO87023	Demulsifier	Belly tank/ ABJ 1021													
	DMO87023	Demulsifier	12-1													
	~~DMO87023~~	~~Demulsifier~~	~~101594~~					~~0~~		~~0~~						~~530 gal arrived Nov 18~~
	PAO50283	Paraffin Inhibitor	Belly tank	Electric Pump	PBB8435	LLP header		220		173	15	15	76	11-Feb-26	1134	Pump On

	PAO50283	Paraffin Inhibitor	Belly tank(Biocide Tank)					378		351	15	15	10	11-Feb-26		Pump On
	PAO50283	Paraffin Inhibitor	157663					80		80						530 gal arrived Oct 07
	PAO50283	Paraffin Inhibitor	112686					530		530						530 gal arrived Nov 05
BEWS	**Phase36/3**	**Production P/F(GLC)**	**Active status**													
	CRW323	Corrosion Inhibitor	Belly tank	Williams P500CV225	P-7000	Prod. Header (XCI-1000)	11-Jun-25	210	10-Oct-25	210	0	0.0	210		210	Pump Off
	DMO87023	Demulsifier	Belly tank	Williams P1000CV400	P-7014	Export P/L (XCI-1006)		480		31	0	16	31		31	Pump Off
				Williams P1000CV400	P-7013	Export P/L (XCI-1006)										Pump Off
	PAO50283	Paraffin Inhibitor	Belly tank	Williams P1000CV400	P-7010	Export P/L (XCI-1008)		490		490	0	20	490		490	Pump Off
BEWT	**Stage V**	**Production P/F(GLC)**	**Active status**													
	CRW323	Corrosion Inhibitor	Belly tank	Checkpoint Series 1250	P-8415C	Prod. Header	11-Nov-22	46	10-Oct-25	46	0	0	46		46	Pump Off
	DMO32112	Demulsifier	Belly tank	Checkpoint Series 1250	PBB8440A	Prod. Header		455		132	0	0	132		132	Pump Off
BEWU	**Stage III**	**Production P/F(GLC)**	**Active status**													
	CRW323	Corrosion Inhibitor	Belly tank	Checkpoint Series 1250	P-8415B	Prod. Header(XCI-001)	16-Mar-20	85	10-Oct-25	85	0	0	85		85	Pump Off
	DMO87023	Demulsifier	Belly tank	Checkpoint Series 1250	PBB8440A	Export P/L (XCI-003)		435		435	0	0	14792		14792	Pump Off
	Empty Tank	Lube oil	197032													
BEWV	**Phase41**	**AR**	**Inactive status**													
	CRW323	Corrosion Inhibitor	T-7000	Williams P1000CV400	P-7000	Prod. Header (XCI-1000)	2-Nov-23	316	2-Jul-25	0	0	#DIV/0!	0		0	Pump Off
	CRW323	Corrosion Inhibitor		Williams P500CV225	P-7003	Comp. Header / Test sep										
	DMO87023	Demulsifier	T-7002	Williams P1000CV400	P-7013	Export P/L (XCI-1006)		360		0	0	#DIV/0!	0		0	Pump Off
	PAO50283	Paraffin Inhibitor	T-7001	Williams P1000CV400	P-7014	Export P/L (XCI-1008)		550		0	0	#DIV/0!	0		0	Pump Off
BEWW	**Stage IV**	**Production P/F(GLC)**	**Active status**													
	CRW323	Corrosion Inhibitor	Belly tank	Williams P500CV225		Prod. Header (XCI-1000)	22-Aug-18	520	1-Oct-18	0	0	5	0		0	Pump Off
	PAO85605	Paraffin Dispersant	BHP-006	SRWA						413						
	PAO85605	Paraffin Dispersant	180579	SRWA						402						
	PAO85605	Paraffin Dispersant	112963	SRWA	B2 flushing	move to SATT		530		530						
	PAO85605	Paraffin Dispersant	178067	SRWA	B2 flushing			530		530						
	PAO85605	Paraffin Dispersant	76426	SRWA	B2 flushing			530		530						
	PAO85605	Paraffin Dispersant	COTL-010	SRWA	B2 flushing					386						
	PAO85605	Paraffin Dispersant	529334	SRWA	B2 flushing			530		530						
	PAO85605	Paraffin Dispersant	COTL-001/125580	SRWA				530		530						
	PAO85605	Paraffin Dispersant	113455	SRWA				530		530						
	PAO85605	Paraffin Dispersant	113271	SRWA				530		530						
	PAO85605	Paraffin Dispersant	COTL-024	SRWA				395		395						
	PAO85605	Paraffin Dispersant	189911	SRWA				530		530						
	PAO85605	Paraffin Dispersant	163279	SRWA				290		290						
	PAO85605	Paraffin Dispersant	113285	SRWA				530		530						
	PAO85605	Paraffin Dispersant	112682	SRWA				530		530						
BEWX	**Stage IV**	**Production P/F(GLC)**	**Active status**													
	CRW323	Corrosion Inhibitor	Belly tank	Checkpoint Series 1250	Prod.Header (XCI-1001)	Prod.Header (XCI-1001)	20-Nov-25	653	28-Nov-25	630	3	5	210	26-Jun-26	630	Pump On
	DMO87023	Demulsifier	Belly tank	Checkpoint Series 1500	Prod.Header (XCI-1002)	Prod.Header (XCI-1002)		244		125	15	15	26	24-Dec-25	390	Pump On
	DMO87023	Demulsifier	772358	from BEWA						265						530 gal arrived Nov26
	DMO87023	Demulsifier	12-1													
	~~DMO87023~~	~~Demulsifier~~	~~212176~~					~~0~~		~~0~~						~~530 gal arrived Oct 14~~
	PAO50283	Paraffin Inhibitor	Belly tank	Checkpoint Series 1500	Prod.Header (XCI-1003)	Prod.Header (XCI-1003)		237		237	0	15	237		237	

BEWY	Phase43-7	Production P/F(GLC)	Active status													
	CRW323	Corrosion Inhibitor	Belly tank	Williams P500CV225	P-7001	Prod. Header	24-May-24	77	10-Oct-25	77	0	0	77		77	Pump Off
	DMO87023	Demulsifier	Belly tank	Williams P1000CV400		start Mar 07,2017		134		50	0	0	50		50	Pump Off
MAWA	Stage I	AR	Inactive status													
MAWB	Stage III	Production P/F(BC)	Active status													
	CRW323	Corrosion Inhibitor	Belly tank	Checkpoint	PBB8415B	Prod. Header	10-Nov-25	307	12-Nov-25	244	0	3	244		244	Pump Off
	CRW323	Corrosion Inhibitor	113451													
	Empty Tank	Lube oil	178069													
MAWC	Stage IV(Hub)	Production P/F(BC)	Active status													
	CRW323	Corrosion Inhibitor	Belly tank	Checkpoint Series 1250	PBB8415A	Prod. Header	2-Oct-25	264	12-Nov-25	264	0	0	264		264	Pump Off
MAWD	Stage III	Production P/F(GLC)	Active status													
	CRW323	Corrosion Inhibitor	Belly tank	Checkpoint Series 1250	P-8415B	Prod. Header	10-Nov-25	532	12-Nov-25	508	0	5	508		508	Pump Off
																~~530 gal arrived Oct 14~~
	DMO87023	Demulsifier	Belly tank	Checkpoint				400		400	0		400	#DIV/0!	400	
MAWH	Phase 43	Production P/F(BC)	Active status													
	CRW323	Corrosion Inhibitor	T-7000	Williams P500CV225	P-7001	Prod. Header (XCI-1000)	28-Nov-25	87	30-Nov-25	87	4	4	22	21-Dec-25	87	Pump On
	CRW323	Corrosion Inhibitor	T-7000	Williams P500CV225	P-7001	HP Sep							0		0	Pump Off
	CRW323	Corrosion Inhibitor	COTL-015													
	DMO87023	Demulsifier	Belly tank					50		600	12	12	50	17-Jan-26	600	Pump On
	DMO87023	Demulsifier	12-1													
	~~DMO87023~~	~~Demulsifier~~	~~COTL-016~~	~~move to MAWH~~				~~0~~		~~0~~						~~530 gal arrived Oct 07~~
	~~DMO87023~~	~~Demulsifier~~	~~112872~~	~~from PP~~				~~0~~		~~0~~						~~530 gal arrived Oct 07~~
	~~DMO87023~~	~~Demulsifier~~	~~189907~~	~~from LAWA~~	~~Done~~			~~530~~		~~0~~						~~530 gal arrived Nov 26~~
MAWF	Phase 46	Production P/F(BC)	Active status													
	CRW323	Corrosion Inhibitor	T-7000	Williams P500CV225	P-7001	Prod. Header	3-Nov-25	311	10-Nov-25	260	5	7.5	52	1-Jan-26	260	Pump On
	CRW323	Corrosion Inhibitor	189915													
MAWG	Stage IV	Production P/F(BC)	Active status													
	CRW323	Corrosion Inhibitor	Belly tank	Checkpoint Series 1250	P-8415A	Prod.Header (XCI-1001)	10-Oct-25	132	17-Oct-25	132	0	3	132		132	Pump Off
	PX0191	Demulsifier	Belly tank					270		360	0	0			360	Pump Off
MAWI	Phase 36	New P/F	Inactive status													
	CRW323	Corrosion Inhibitor	T-7000	Williams P500CV225	Prod. Header (XCI-1000)	Prod. Header (XCI-1000)	16-Feb-23	244	15-Oct-23		0	0			0	Pump Off
	DMO87023	Demulsifier	T-7002	Williams P1000CV400	P/L (XCI 1008)	P/L (XCI 1008)		220			0	0			0	Pump Off
	PAO50283	Paraffin Inhibitor	T-7001	Williams P1000CV400	P/L (XCI 1006)	P/L (XCI 1006)		560			0	0			0	Pump Off
LAWA	Stage III	Production P/F(GLC)	Active status													
	CRW323	Corrosion Inhibitor	Belly tank	Checkpoint Series 1250	Prod Header (XCI-001)	Prod Header (XCI-001)	15-Nov-25	165	30-Nov-25	165	0	0	165		165	Pump Off
	DMO87023	Demulsifier	Belly tank	Checkpoint Series1500	Export P/L (XCI-002)	Export P/L (XCI-002)		125		508	32	32	16	15-Dec-25	508	Pump On
	DMO87023	Demulsifier	12-1													
	DMO87023	Demulsifier	12-1													
	~~DMO87023~~	~~Demulsifier~~	~~112955~~					~~530~~		~~0~~						~~530 gal arrived Nov 18~~
	PAO50283	Paraffin Inhibitor	Belly tank	Checkpoint Series 1500	Export P/L (XCI-003)	Export P/L (XCI-003)	Lv. Malfunction	54	Lv. Malfunction	54	0	10	54		54	Pump Off
LAWC	Phase44	Production P/F(GLC)	Active status													
	CRW323	Corrosion Inhibitor	T-7000	Williams P500CV225	P7001	Prod. Header	15-Nov-25	181	29-Nov-25	181	0	0	181		181	Pump Off
	DMO87023	Demulsifier	T-7001	Williams P1000CV400	P7010	P/L (XCI 1008)		245		600	20	20	30	29-Dec-25	600	Pump On

	DMO87023	Demulsifier	12-1													
	DMO87023	Demulsifier	12-1													
	~~DMO87023~~	~~Demulsifier~~	~~85413~~					~~530~~		~~0~~						~~530 gal arrived Nov 18~~
	PAO50283	Paraffin Inhibitor	T-7002	Williams P1000CV400	P7013	P/L (XCI 1006)	Lv. Malfunction	59	Lv. Malfunction	655	11	11	60	27-Jan-26	655	Pump On
	PAO50283	Paraffin Inhibitor	T-7000	Williams P1000CV400	P7012	Inlet BC		0		0						Pump Off
	PAO50283	Paraffin Inhibitor	112089					Y		Y						530 gal arrived Nov 05
	~~PAO50283~~	~~Paraffin Inhibitor~~	~~112874~~					~~410~~		~~0~~						~~530 gal arrived Oct 07~~
	~~PAO50283~~	~~Paraffin Inhibitor~~	~~157660~~					~~0~~		~~0~~						~~530 gal arrived Oct 07~~
	XC80105	Biocide	189905					400		400						
LAWE	**Stage III**	**Production P/F(GLC)**	**Active status**													
	CRW323	Corrosion Inhibitor	Belly tank	Checkpoint Series 1250		Prod. Header (XCI-001)	8-Mar-19	369	1-Jan-23	369	0	0	369		369	Pump Off
	PAO50283	Paraffin Inhibitor	712472					0		0	0	0	0		0	Pump Off
	Empty Tank	Lube oil	COTL-012													
SRWA	**Phase47**	**Production P/F(GLC)**	**Active status**													
	CRW323	Corrosion Inhibitor	T-7003	Williams Series500CV225		Prod. Header	28-Aug-25	363	12-Sep-23	363	0	0			363	Pump Off
	DMO87023	Demulsifier	T-7002	Williams Series1000CV400	Pump 7010	Export P/L		550		0	0	10	0		0	Pump Off
	PAO50283	Paraffin Inhibitor	T-7001	Williams Series1000CV400	Pump 7014	Export P/L		213		0	0	10	0		0	Pump Off
		Paraffin Inhibitor	T-7000	Williams Series1000CV400	Pump 7013	Export P/L		340		0						Pump Off
SRWB	**Stage III**	**Production P/F(GLC)**	**Rig operation status**	**WUU Operation**												
	CRW323	Corrosion Inhibitor	T-7003	Williams Series500CV225		Prod. Header	25-Nov-25		2-Dec-25		0	0				Pump Off
	DFO80257	Defoamer	189913			Before Separator		0		0	0	15	0		0	530 gal arrived Oct 14
	DFO80257	Defoamer	12-1													
	DMO87023	Demulsifier	T-7002	Williams Series1000CV400	Pump 7010	Export P/L		409		325	20	13	16	18-Dec-25	325	Pump On
	DMO87023	Demulsifier	12-1													
	~~DMO87023~~	~~Demulsifier~~	~~112945~~					~~0~~		~~0~~						~~530 gal arrived Nov 18~~
	PAO50283	Paraffin Inhibitor	T-7001	Williams Series1000CV400	Pump 7014	Export P/L					0	0	0		0	Pump Off
		Paraffin Inhibitor	T-7000	Williams Series1000CV400	Pump 7013	Inlet BC										Pump Off
	PAO 50283	Paraffin Inhibitor	712487	In use at PS skid				462		287	50	50	27	28-Dec-25	1347	
	PAO50283	Paraffin Inhibitor	COTL-022					530		530						530 gal arrived Sep 10
	PAO50283	Paraffin Inhibitor	178075					530		530						530 gal arrived Nov 18
	PAO50283	Paraffin Inhibitor	189910													
	PAO50283	Paraffin Inhibitor	157684													
	PAO50283	Paraffin Inhibitor	178079													
	PAO50283	Paraffin Inhibitor	712467													
BEWZA	**Stage III**	**Production P/F(GLC)**	**Rig operation status**													
	CRW323	Corrosion Inhibitor	T-7003	Williams Series500CV225		Prod. Header	10-Nov-25	160	10-Nov-25	155	4	3	171	2-Mar-26	685	Pump On
	CRW323	Corrosion Inhibitor	112942					530		530						
	DMO87023	Demulsifier	T-7002	Williams Series1000CV400	Pump 7010	Export P/L		0		0	0		0		0	Pump Off
	PAO50283	Paraffin Inhibitor	T-7001	Williams Series1000CV400	Pump 7014	Export P/L					0	0	0		0	Pump Off
	EMPTY tank		112948	Prepare move to BEWZA	Installation for day tank											
	EMPTY tank		178077	Prepare move to BEWZA	Installation for day tank											
	EMPTY tank		157686	Prepare move to BEWZA	Installation for day tank											
BEWI	**Stage III**	**AR**	**Inactive status**						20-Aug-25							

ภาคผนวก 21

คู่มือปฏิบัติงาน Fixed Lifting Equipment Operating Practices

Chevron Thailand – Fixed Lifting Equipment Operating Practices

Approved 1 July 2016
Version 1.3

©2006 by Chevron Corporation

This document contains proprietary information of Chevron Corporation. Any use of this document without express, prior, written permission from Chevron Corporation and/or its affiliates is prohibited.

Contents

Chevron Thailand – Fixed Lifting Equipment Operating Practices....1
1.0 Purpose, Objective and Scope....3
2.0 Requirements....4
3.0 Resources, Roles and Responsibilities....6
Table 1: Key Roles....6
Table 2: Responsibilities....6
4.0 Procedures....12
4.1 Crane Requirements....12
Table 3: Crane Requirements....13
4.2 Training Requirements....14
Table 4: Crane Operator License Classification....17
4.3 Documentation....27
4.4 Safety Precautions....27
4.5 Supervision of Lifting Operations....28
4.6 Undertaking Lifting Operations....29
4.7 Crane File Record Book / Crane History File....29
4.8 Safety in Crane Operations....30
Table 5: Crane Operation Stoppage....33
4.9 Crane Operations near Overhead Power Lines....33
Table 6: Minimum Clearance for Cranes Near Proximity to Overhead Power Lines....34
4.10 Personnel Transfers....35
4.11 Suspended Personnel Platforms....36
4.12 Simultaneous Crane and Helicopter Operation....36
4.13 Communication....36
4.14 Crane Inspections (Under Lift Team Duty)....38
4.15 Alternate Lifting Devices....40
4.16 Mobile Crane Operations....40
5.0 Continual Improvement....42
6.0 Attachments....43
6.1 Attachment 1: Definitions....43
6.2 Attachment 2: Crane Pre-Lift Checklist....52
6.3 Attachment 3: Crane Pre/Post Operation Check Sheet....56
6.4 Attachment 4: Emergency Load Lowering Procedures....57
7.0 Document Control Information....63
Table 7: Document Control Information....63

Table 8: Document History 63
8.0 Document List 64
Table 9: Document List 64
9.0 Appendix 64
9.1 Appendix 1 - Management and Inspection of Fixed Lifting Equipment 62

List of Tables

Table 1: Key Roles 6
Table 2: Responsibilities 6
Table 3: Crane Requirements 13
Table 4: Crane Operator License Classification 17
Table 5: Crane Operation Stoppage 30
Table 6: Minimum Clearance for Cranes Near Proximity to Overhead Power Lines 34
Table 7: Document Control Information 63
Table 8: Document History 63
Table 9: Document List 64

List of Figures

Figure 1: Crane License Formats and Colors 18
Figure 2: Crane Operator License Issue and Renewal Procedures 24
Figure 3: Qualified Rigger License 26
Figure 4: Standard Crane Hand Signals 36

1.0 Purpose, Objective and Scope

Purpose

The purpose of this procedure is to state Company policy regarding safe lifting equipment operation and usage on Chevron property throughout the Chevron Thailand Profit Center.

The contents are not intended to replace manufacturers or regulatory resources (API RP 2D, etc.), but are designed to highlight some of the key requirements of regulatory enforcement agencies and manufacturer's recommendations which should be considered during all crane operations and activities.

The contents are intended to provide guidance on safe operational practices for cranes and compliance with national and international laws, rules and regulations and Company practices.

Objectives

The objectives of this process are to:

1. Provide personnel with an understanding of Company policy regarding basic crane and fixed lifting equipment operations.
2. Establish minimum guidelines for safe operation, maintenance, and inspection of cranes and fixed lifting equipment.
3. Promote compliance with good safety practices and commitment to attaining zero accidents.

NOTE: There may be certain circumstances not specifically covered in this procedure and associated documents where further clarification may be required.

Scope

This document covers crane operator and rigger training standards, and includes operator inspection of permanent and temporary cranes and fixed lifting equipment throughout the Chevron Thailand operations.

This standard applies to mechanical lifting activities where lifting methods and rigging shall meet these minimum requirements.

This standard does not address activities where forklift, mobile elevated work platform (MEWP), manlift or other similar equipment might be used for lifting activities.

Other aspects of Chevron policy regarding crane operations and lifting equipment are found in:

Portable Lifting Equipment Operating Practices

Appendix 1: Management and inspection of portable lifting equipment (PLE)

Appendix 2: Guide for examination and testing of containers

Appendix 3: Chevron Thailand Banned and Recommended Lifting /Rigging Practices

Fixed Lifting Equipment Operating Practices

Appendix 1: Management and inspection of fixed lifting equipment

This document does not cover contract export tankers which operate in the field and are contracted under their 'flag' country regulations. Their crane and crane operator certification are checked when they are hired as complying with that flag country's rules, and therefore these vessels are excluded from the scope of this document.

Contract Owners/Managers contracting other temporary services should consider this procedure in their contract pre-qualifications and ensure that contractors meet or exceed these requirements.

National Regulations

The Thai Regulation of MOE, B.E. 2555 (2012) Re: Prescription Criteria and Method for Exploration Production and Conservation of Petroleum does not specify any requirements with respect to regular inspection and re-certification of lifting equipment.

In such a context, it is the duty of the operator to define and implement an inspection policy in line with the recognized practices and standards.

In Chevron, this policy will be based on the Thai regulation and the I.L.O. (International Labor Organization) conventions, complemented with requirements from recognized national or international standards. This applies whether the equipment is owned by Chevron or Contractor.

Accordingly, the present document specifies the procedure to be used on all premises operated by Chevron in order to ensure that all requirements of the above regulations and recognized standards are covered, and that lifting and hoisting equipment is properly maintained and certified.

Measurement and Verification

Data collection that shows a reduction in the number of reported crane defects (JDE 8.11 EAM history)

Data collection that shows a reduction in the number of reported crane related incidents

2.0 Requirements

Hazards associated with Lifting and Rigging shall be identified and mitigated prior to beginning work.

Competent personnel must complete (i.e., develop lift plan as required) the steps needed to properly and safely prepare the job site and equipment for the start of work.

Lifting and rigging equipment must be engineered and certified for current use and in good working order as verified through Pre/Post Operation inspections.

Note: *The use of non-certified locally fabricated or modified lifting and rigging equipment is prohibited.*

Lifting and rigging equipment shall be used in accordance with the intended design purposes and specified limits of the manufacturer and recognized and accepted good industry practices and company standards.

Confirm weight of the object and establish the load's center of gravity prior to beginning the lift.

Establish clear pick-up and lay-down areas that are within the crane's load lifting radius.

Ensure the load path from the beginning of the lift to the lay-down area is clear of obstructions.

Rig loads appropriately and ensure loads are free of possible restraints (ice, sea fastenings, hold-down bolts, etc.).

Place load in designated lay-down area and remove rigging equipment after load is securely in place and free of support from the crane.

3.0 Resources, Roles and Responsibilities

Table 1: Key Roles

Role	Name	Title	Signature (Optional)
Process Sponsor	[redacted]	GM, Operations	
Process Advisor	[redacted]	MSW Process Advisor	
Originator	[redacted]	HES Specialist	

The following table outlines the roles and responsibilities associated with this procedure.

Table 2: Responsibilities

Role	Responsibilities
Process Sponsor	• Serve as an advocate of the process to ensure that it is understood and used as designed within the SBUs • Approve relevant procedure that he/she is a sponsor • Conduct an annual review of process/procedure effectiveness and efficiency within SBU
Process Advisor	• Serve as an advocate of the process with the SBU and asset management to ensure that it is accorded the appropriate priority and receives funding, personnel and other resources • Ensure that process effectiveness and efficiency are measured and verified at least annually • Allocate resources to operate and improve the process/procedure
Asset Manager	• Act as sponsor of the process and ensure that this procedure is in place, is regularly reviewed, and is complied with.
Person in Charge (PIC)	• Ensure that personnel within their area who are involved in crane maintenance and inspection operations receive the correct training and certification for their task. • Ensure that personnel do not carry out tasks for which they are not trained. • Ensure that all personnel are aware of and comply with the contents of this guideline and consistently implement Best Practices.
Offshore Installation Manager	• Ensure that this procedure is in place, personnel are trained and competent, and the process is complied with.
Maintenance Superintendent	• Review the procedure on a regular basis and incorporate agreed changes. • The Maintenance Superintendent is responsible for the coordination of the Lift Team consisting of all key personnel involved in the planning and execution of a lift operation. The Lift Team will typically include a qualified Crane Operator, one or more Deck Crew, and the Vessel

Role	Responsibilities
	Captain. Depending on the scope of the lift operation, the Lift Team may also include the following: Facilities Engineer, Facilities Representative, Drilling Representative, Work-over Representative, and Production Operator. • Key responsibilities of the Lift Team are outlined below. Specific responsibilities of key Lift Team members are provided in later sections **Pre-Operation** Before the operation, members of the Lift Team have these responsibilities: • Conduct pre-lift meeting to review scope of work and execution plan. • Review Crane Pre-Lift Checklist with all members of Lift Team. • Prepare written JSA/JHA/JHA for all heavy lifts and non-routine lifts. • Evaluate the lift operations to determine if additional qualified riggers are needed to assist in loading or offloading operations. • Ensure that a clear method of communication is established. • Assess site conditions to ensure that the lift operation can be conducted safely (sea state, currents, wind speed and direction, weather, size of vessel, position of cargo, adequate lighting). • Review lift path and weight of loads to determine if specific Simultaneous Operations procedures are required to protect production equipment from falling loads. **During Operation** During the operation, members of the Lift Team have these responsibilities: • Maintain constant communication between all Lift Team members. • If site conditions change or if the lift operations change from the original plan, stop work and conduct another pre-lift meeting. • Complete a Crane Pre-Lift Checklist and JSA/JHA/JHA, as required, before continuing with the lifts.
Maintenance Supervisor	• Ensure that this procedure is in place, personnel are trained and competent, and the process is complied with.
Qualified Crane Inspector (Mechanic with engineering license)	• Ensure that the cranes and their accessories are periodically inspected in accordance with this procedure and good engineering practice. • Check and sign all crane inspection reports on a quarterly basis • Complete all crane inspection reports • Knows the scope of work and procedures to be followed • Documents scheduled Crane Inspection • Verifies proper crane setup • Prevents equipment malfunction by identifying and assessing possible failure points

Role	Responsibilities
	• Communicates needed changes in work scope or changes in conditions to supervisor immediately • Verifies that appropriate equipment is being used
Qualified Crane Operator	All personnel who operate any cranes on Chevron facilities will be qualified Crane Operators, as per API RP 2D, and will be able to provide documentation indicating that they have successfully completed a Crane Operator Training Course that meets the requirements of API RP 2D. All Crane Operators driving Company cranes will also be certified as Class "A T/C", "A", "B+", "B", "C" or "O". A Qualified Crane Operator must be re-certified every two years. A Qualified Crane Operator must also meet the requirements of a Qualified Rigger. A Qualified Crane Operator is not allowed to make repairs to critical components. (See API Spec 2C, Appendix A.) All non-routine lifting operations will be planned and carried out only by a certified class "A" (for offshore crane) and class "o" (for onshore crane) crane operator" The Crane Operator will always be the leader of the Lift Team. In addition to the Lift Team responsibilities listed above, the Crane Operator's responsibilities also include those listed below. **Pre-Operation** Before the operation, the Crane Operator has these responsibilities: • Participate in pre-lift meeting as discussed in Lift Team Responsibilities above. • Ensure that all required paper work (PTW, HA, PPHA, crane pre-post, pre-lift check list, Lifting plan and etc.) are established • Complete "Crane pre/post operation checklist as well as Crane pre-lift check list before beginning crane operations. • Ensure the new crew to comply with Chevron SSE program • Verify that all personnel involved in executing the lift operation have the proper qualifications as Crane Operator or Rigger. • Designate a Qualified Rigger as a signal person any time the Qualified Crane Operator is unable to see a load. • Ensure that only Qualified Riggers and essential personnel are allowed in the work area during lift operations. • Verify load weights by markings on the load and documentation on the shipping manifest. • Verify that the appropriate load-rating chart is in place and that the reeving is properly configured to accommodate the planned loads. • Ensure that the proper rigging equipment is selected and inspected by a Qualified Rigger before the lift. • Prior to the use of a mobile crane the ground condition must be know and suitable for the intended lifting operation. The location of underground services must also be verified.

Role	Responsibilities
	During Operation During the operation, the Crane Operator has these responsibilities: • Assume ultimate responsibility for safe operation of the crane. • Never start machine movement unless the load or signal person is within range of vision. Appropriate signals (audible or visual) must be given. • Respond to signals only from the appointed signal person, and emergency stop signals from anyone at any time. • Ensure that crane capacity, as shown in the load chart, is not exceeded during crane operations. • Be aware of helicopter traffic and follow Aviation procedures. • When cranes are operated at night, ensure that there is sufficient lighting for safe operation. The load and landing area should be illuminated. • Wear proper work clothes and Personal Protective Equipment in accordance with Chevron PPE requirements. • Stop any lift operation deemed unsafe (exercise Stop Work Authority). • Evaluate crane operations during bad weather or when ability to communicate with the signal person is impaired. **Post-Operation** After the operation, the Crane Operator has these responsibilities: • Ensure that the crane is properly secured and controls are turned off or to the neutral (hydraulic cranes) position before leaving the crane. • Do not leave crane unattended with a load in the air. Always lower the load to the deck before leaving the crane. (See Unattended Control Stations for exceptions during wireline operations.)
Qualified Rigger	The Qualified Rigger is an integral part of crane operations, shipping, material movement, and rigging. Qualified Riggers have certain responsibilities and duties that are critical to the safe load lifting and attaching activities. The Crane Operator and Rigger(s) must work as a team. All personnel who participate in rigging operations on Chevron facilities will be Qualified Riggers, as per API RP 2D, and will be able to provide documentation indicating that they have successfully completed a Rigger Training Course that meets the requirements of API RP 2D. Rigging operations will include, at minimum, attaching and/or detaching lifting equipment to loads and providing signals to Crane Operators. Communication among the Lift Team is one of the most important responsibilities. Along with the Crane Operator, the Rigger will always be a key member of the Lift Team.

Role	Responsibilities
	In addition to the Lift Team responsibilities listed previously, the Rigger's responsibilities also include those listed below. **Pre-Operation** Before the operation, the Rigger has these responsibilities: • Participate in pre-lift meeting as per Lift Team Responsibilities (see above). • Ensure that only Qualified Riggers and essential personnel are allowed in the work area during lift operations. • Verify load weights by markings on the load and documentation on the shipping manifest. • Select the proper rigging equipment and/or cargo container for the lift. • Verify the safe working loads of the equipment being used and never exceed this limit. • Inspect all hardware, equipment and slings before use. Destroy or render unusable any defective components. • Verify that all slings have proper certification tags. If the identification tag is missing, the sling will not be used. If a replacement tag cannot be obtained, the sling must be destroyed. • Inspect all loads or cargo containers, including permanent slings. Evaluate load stability and potential for spill or release of fluids. • Ensure that a designated signal person is identified and communication methods are agreed upon. • Barricade lifting and loading area. **During Operation** During the operation, the Rigger has these responsibilities: • Assume responsibility for the safety of all personnel around the crane operations and crane operating area, including personal safety. • When designated, act as a signal person during the lift operation. • Look for potentially unsafe situations and provide a warning to the Crane Operator and others in the crane operations and crane operating area. • Do not stand between the load and another stationary object or boat railing (pinch zone). The Rigger should be facing the crane at a safe distance and never directly beneath the load. • Wear proper work clothes and Personal Protective Equipment in accordance with Chevron PPE requirements. • Stop any lift operation deemed as unsafe (exercise Stop Work Authority). **Post-Operation** After the operation, the Rigger has these responsibilities:

Role	Responsibilities
	• Properly secure loads on vessels, using equipment furnished by the vessel company. • Properly store and maintain rigging equipment.
Qualified Rigging and Lifting Inspector/ PLE inspector	An Inspector shall be either a Class Surveyor / 3rd Party Inspector authorized to issue lifting equipment inspection certificates, or a Chevron trained employee who has documentation indicating that he has successfully completed a 'Portable Lifting Equipment Inspector' training course that meets the requirements of API RP 2D and has a current valid certificate. • Ensure each piece of equipment has an identification tag labeled with manufacturer's name, certification number, rated capacity and the owner's name. • Perform a thorough examination of all Portable Lifting Equipment (PLE). • Remove from service and quarantine any equipment that is not fit for use. • Color codes each piece of equipment with the new current color code. Complete certification documentation.
Qualified non-crane equipment operator	• The Qualified non-crane equipment operator is an integral part of Qualified Crane operations and / or Qualified Rigger to operate, shipment, material movement by using non-crane equipment such as Chain hoist, Come along, Lever Winch, Air tugger and Powered winch etc. • The Qualified non-crane equipment operator has certain responsibilities and duties that are critical to the safe load lifting and attaching activities
Signalman (Dog-man or Banksman)	• The PIC will assign one of the Qualified Riggers to be the designated Banksman (signalman). • The Banksman (signalman) should wear either a high-visibility vest, hard hat cover or arm band for identification of his position. • The Crane Operator shall only follow signals from the designated Banksman (signalman) with the exception of the emergency stop signal which can be given by anyone. • Reporting to the Crane Operator, he is responsible and accountable for: ➢ The safety of the lifting operation ➢ Safe operation of the lifting equipment assigned and in use ➢ The careful and safe handling of all materials ➢ Reporting defects in equipment or processes to the crane driver and/or their area supervision ➢ Not using defective equipment • Ensuring that others do not use defective equipment
Reliability Group Manager	Be responsible and accountable for coordinating with the Maintenance Superintendents / Supervisors on all phases of crane PM's, maintenance and repair work to ensure the cranes are kept in good working order at all times.
Vessel Master	Vessel stability will be the primary concern when loading a vessel. The cargo will be positioned on the deck of the vessel to facilitate ease of rigging during offloading operations.

Role	Responsibilities
	For any lift operations that involves loading to a vessel, the Master will always be a key member of the Lift Team. In addition to the Lift Team responsibilities listed in a previous section, the Vessel Master responsibilities also include the following: • Participate in pre-lift meeting, by radio, as per Lift Team Responsibilities above. • Participate, by radio, in preparation of written JSA/JHA's as required. • Ensure the vessel's stability for all cargo placed upon its deck. • Ensure that lashing equipment that is part of the vessel inventory is maintained in good condition. Proper fastening equipment for securing the cargo is onboard (in good working condition). • Ensure that cargo is properly positioned and secured before leaving the dock or offshore facility. • Ensure that all deck crew participating in handling the cargo on the vessel wear proper work clothes and Personal Protective Equipment in accordance with Chevron PPE requirements. • Ensure that all tag lines attached to cargo are properly positioned, are kept clear, and do not become trapped beneath other cargo. • Stop any lift operation to or from the vessel which is deemed unsafe (exercise Stop Work Authority). • Ensure that the vessel is maneuvered away from the load during the lift operation (crane should also swing away from the boat). • Maintain communication with the Lift Team during lift operations (hand signals and radio). • Ensure that all cargo loaded onto vessel is properly documented on the shipping manifest, with weights recorded. • Check that the manifest is correct and make an immediate report if it is not.
Contract 3rd Party Inspector	• Ensure that the cranes and their accessories are periodically inspected in accordance with this procedure and good engineering practice. • Check and sign all crane inspection reports on a quarterly basis • Complete all crane inspection reports in compliance with Thai Law
Site Personnel	• Report defective lifting equipment to the Chevron Maintenance Supervisor, Site Manager or the Base Manager.

4.0 Procedures

4.1 Crane Requirements

All cranes working on the property of Chevron will be designed, installed, operated, inspected, maintained, and repaired in accordance with the regulations listed in the table below.

For Contractor-owned cranes (i.e., rental cranes, lift-boats, and wire-line), each Contractor will be responsible for compliance with these requirements.

ภาคผนวก 22

Mercury Related Project Screening Flowchart

Chevron Thailand – Mercury Management

Surapat Rungruang, HES Special Project
OE/HES Department
Chevron Thailand Exploration and Production Ltd.

© 2010 Chevron

Presentation Scope

- HOS - Mercury Related Project Screening Flowchart
- Occupational Hygiene Requirements for Mercury Related Activities
- Mercury Contaminated Material Handling and Decontamination
- PPE Preparation for Mercury Related Project
- Decontamination Zoning

© 2010 Chevron

HOS - Mercury Related Project Screening Flowchart

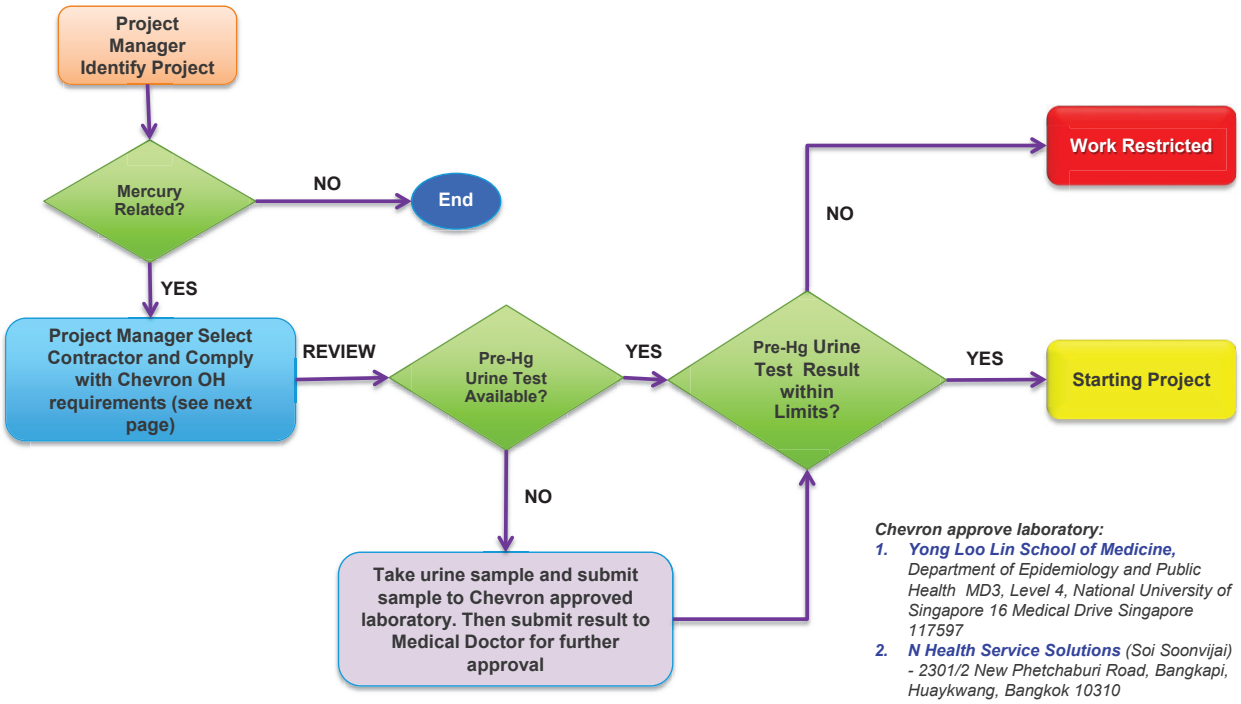

Chevron approve laboratory:

1. ***Yong Loo Lin School of Medicine,*** *Department of Epidemiology and Public Health MD3, Level 4, National University of Singapore 16 Medical Drive Singapore 117597*
2. ***N Health Service Solutions*** *(Soi Soonvijai) - 2301/2 New Phetchaburi Road, Bangkapi, Huaykwang, Bangkok 10310*

© 2010 Chevron

Occupational Hygiene Requirements for Mercury Related Activities

Pre Job Planning by Contractor

- * Submit Pre Urine Test Result prior to get approval from Medical Doctor or Erawan Medic
- Submit "Respiratory Fit Test" document (annually required)
- Provide HAZMAT, HAZCOM and Mercury Awareness Training evidences

Work In Progress at Chevron Facility

Verify contractor related document by HESS

Check PPE to ensure all meet Chevron Standards

Conduct OH Monitoring (Workplace Exposure Monitoring) by medic on location

Post Job by Chevron at Chevron Facility

- ** Collect Post Urine Test - by Chevron at Working Site
- Notify Project Manager if test result exceeding standard limit

** Urine Hg result is valid within 3 months prior to work (must not perform activity related to mercury exposure)*
*** Post urine mercury can be used for Pre test for other project when getting the result from laboratory*

© 2010 Chevron

Mercury Contaminated Material Handling and Decontamination

- **Material Pre-cleaning:** clean material by rinsing with water and detergent and then rinsing with water again.
- **Mercury Decontamination:**
  - Apply the chemical on material surface or into enclosed units. Isolation of decontamination unit or section might be required. Allow 20-30 minutes contact or retention time.
  - Rinse the unit/material with water and allow them to air dry.
  - Repeat the decontamination cycle until the required mercury level as specified
  - Other recommended method for isolated equipment part, material, piping spool or valves is to immerse the equipment and part into decontamination solution and allow the reaction to happen for 20-30 minutes.

© 2010 Chevron

Mercury Contaminated Material Handling Flowchart

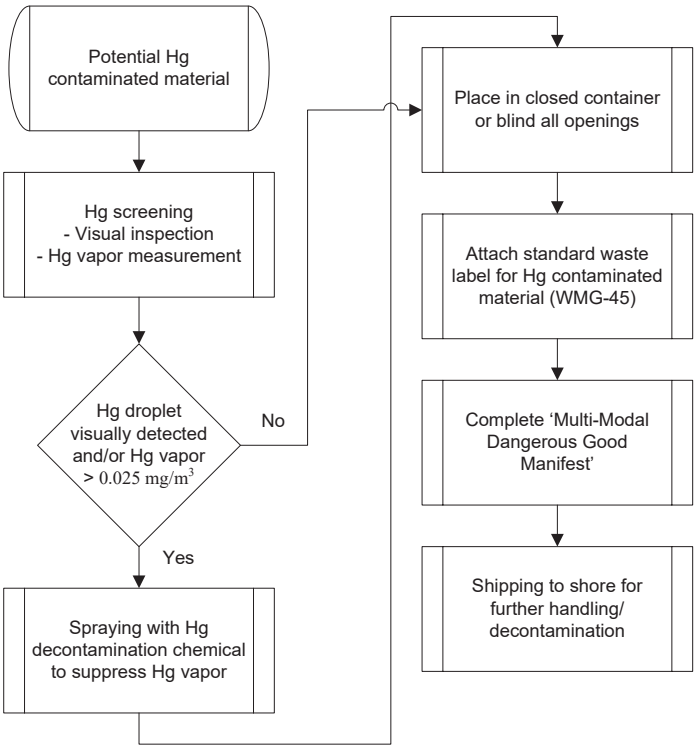

© 2010 Chevron

Mercury Contaminated Material Decontamination Flowchart

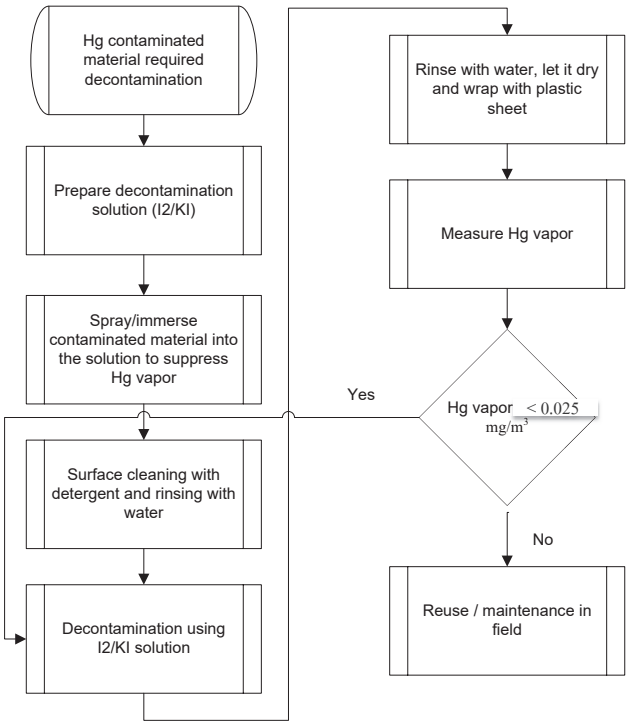

© 2010 Chevron

Mercury Contaminated Material - Storage Container and Packing Requirements

- Mercury contaminated materials, when possible, should be placed into plastic bag that is strong, leaked-proof and punctured-resistant.
- The bag must be impervious to the elemental mercury and completely surrounds/seals the contents of materials.
- Plastic bag is then placed into UN standard plastic drum or other suitable container.
- The plastic drum/container should be equipped with 100% top cover and securely closed before moving or shipping.
- For materials that cannot be contained in closed containers e.g. pipes, valves, PSV, tube bundles, etc, these materials shall be wrapped with plastic sheet and all openings shall be blinded and sealed to the extent that is practically feasible.
- Using metal drums/containers are not recommended due to possible deterioration over the extended storage period and amalgamation property of mercury.

© 2015 Chevron

Example of Proper Packing

- If mercury is detected either by visual inspection or by mercury vapor measurement (measured mercury vapor level exceeds 25 µg/m^3, the equipment/material shall be wrapped with plastic sheet and all openings shall be blinded and sealed to prevent potential exposure to mercury vapor.

Ball Valve

Heat Exchanger

© 2015 Chevron

Labeling Requirements for Mercury Contaminated Materials

Standard waste label “WMG-008” for mercury contaminated materials, including all required information, hazard warning signs and “UN Number 2025”, should be attached to the external side of the container or the packaging material at an easily observed location.

© 2015 Chevron

PPE Preparation for Mercury Related Project

Protective Clothing

A chemical suit (Tyvek Coverall) suitable for mercury handling must be worn when stipulated by the Work permit or Work Plan. These are specifically designed without pockets and without access to avoid transferring mercury contamination to the body or underclothing. When wearing coveralls, it is essential that the pant legs overlap boots.

Heat stress is a significant concern while wearing this type of suit.

© 2015 Chevron

PPE Preparation for Mercury Related Project

Boots

High top rubber or plastic boots must be worn to extend above the ankles so pant legs can overlap the boot tops to ensure mercury cannot enter the inside of the boots and prevent contamination of the socks.

Gloves

Correctly selected rubber gloves must be worn. Gloves must not be re-used once removed unless washed and decontaminated to avoid mercury on the hand. Care must always be exercised to prevent the hands from contaminating other parts of the body, especially the face, eyes and hair. Clean flushing water at a decontamination station/skid must be used for cleaning the nose, face, hands, gloves, etc. and then allowed to air dry.

© 2015 Chevron

PPE Preparation for Mercury Related Project

Eye Protection

A face shield, goggles or full face respirator shall be worn whenever there is a possibility to be splashed with mercury or mercury contaminated materials.

Respirators

Correctly selected mercury canister respirators must be worn when stipulated by the work procedure or work permit, for work with a possible mercury exposure.

Inspect respirators properly before each use.

© 2015 Chevron

Respiratory Selection Guide

Respiratory Type	Protection Factor	Selection Criteria for each Toxic Gases			Oxygen % vol. in air	% LEL
		Benzene (PPM)	Mercury (mg/m^3)	H2S (PPM)		
• Half Mask with Cartridges	10	<10	<0.25	>5.0 * Escape Set	19.5-23.5 %	<10
• Full-Face Mask with Cartridges	50	10≤B<50	0.25≤H<1.25	>5.0 * Escape Set	19.5-23.5 %	<10
• Full-Face Mask with Air Supplied or SCBA	1000	50≤B<500	1.25≤H<10.0	>5.0 * Escape Set	19.5-23.5 %	<10
No entry allow (IDLH) – Escape only		**500 (IDLH)**	**10 (IDLH)**	**100 (IDLH)**		

Benzene (PEL) = 1.0 PPM, Mercury (TLV) = 0.025 mg/m^3, Hydrogen Sulfide (H2S) = 5.0 PPM
* No cartridges for H_2S protection, escape set required to leave the area if H_2S level exceeding 5.0 PPM

© 2010 Chevron

Decontamination Zoning

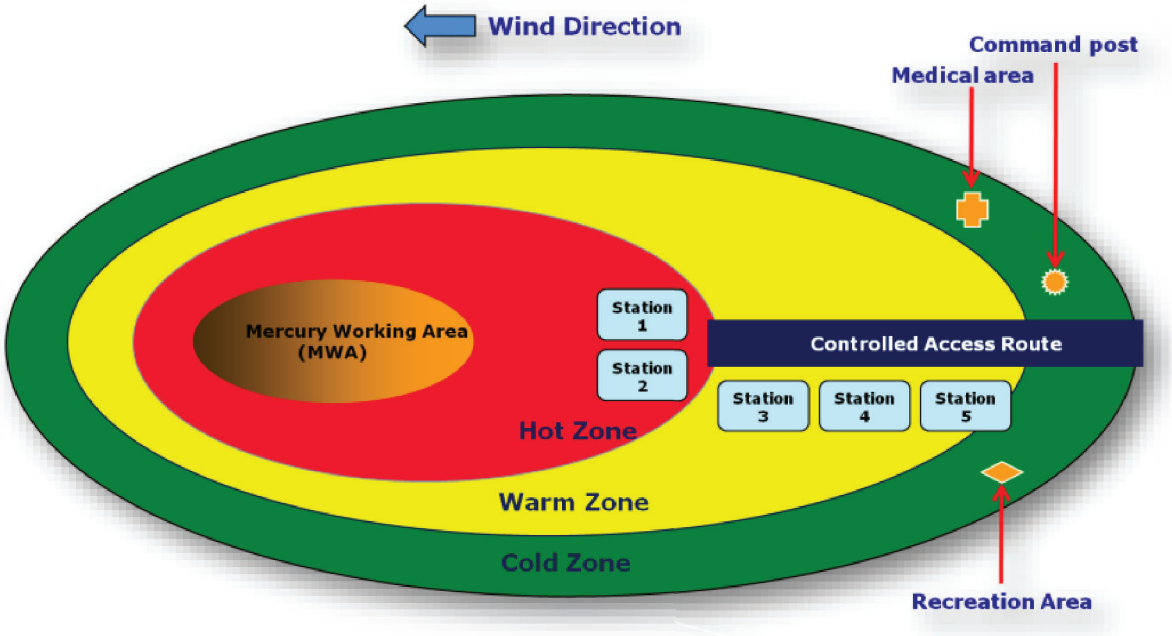

© 2010 Chevron

Mercury (Hg) Exposure Improvement Processes to Achieve Zero Case of HOS Groups.

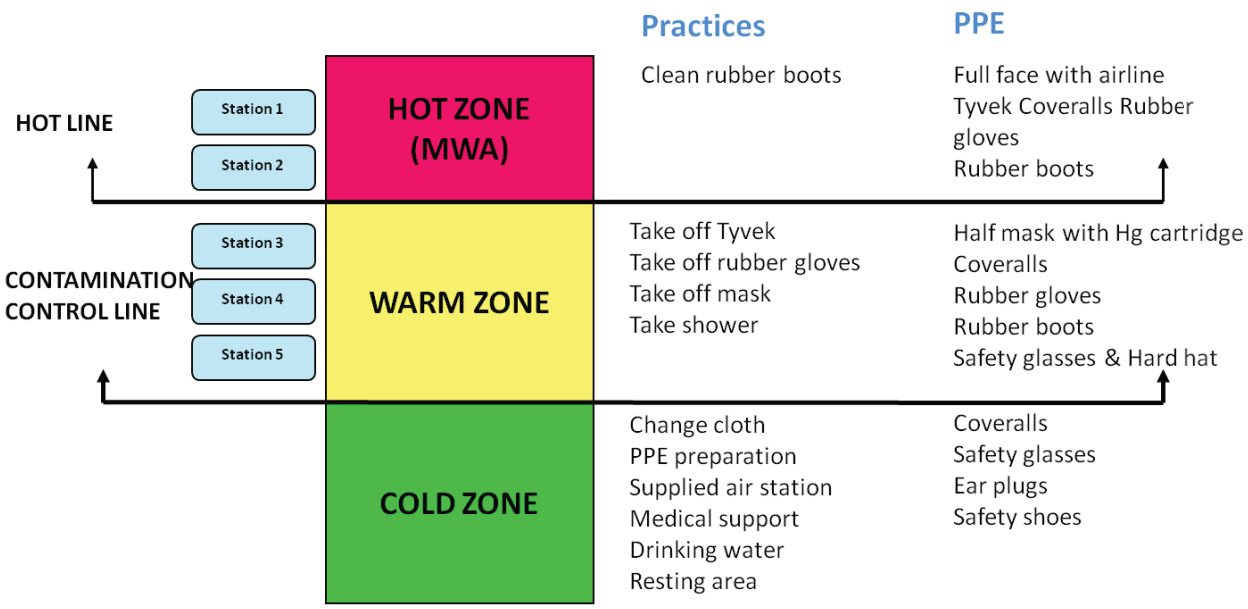

MWA = Mercury Working Area

© 2010 Chevron

PPE – Take Out Steps (develop from over exposure lesson learn)

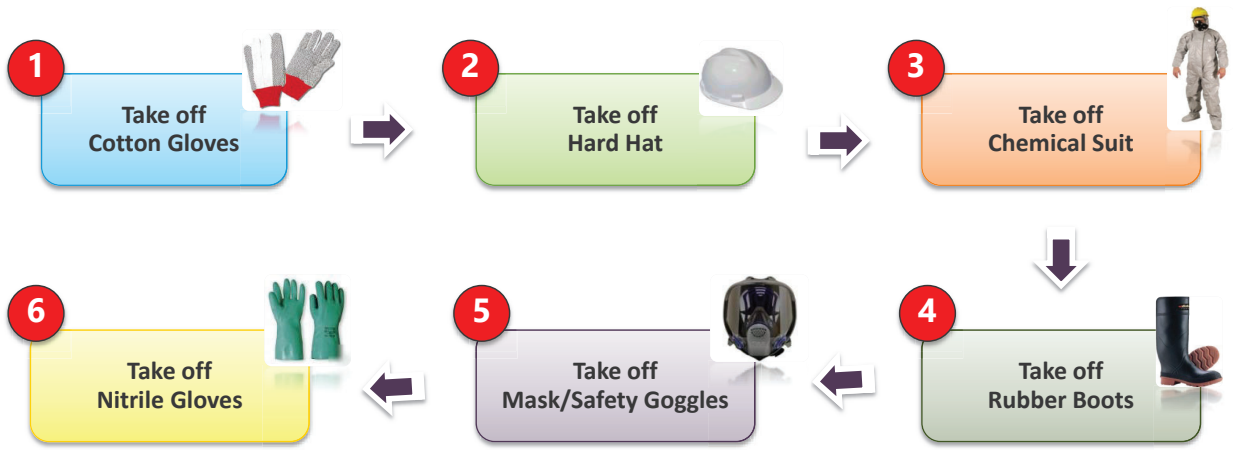

© 2010 Chevron

Q&A

© 2014 Chevron

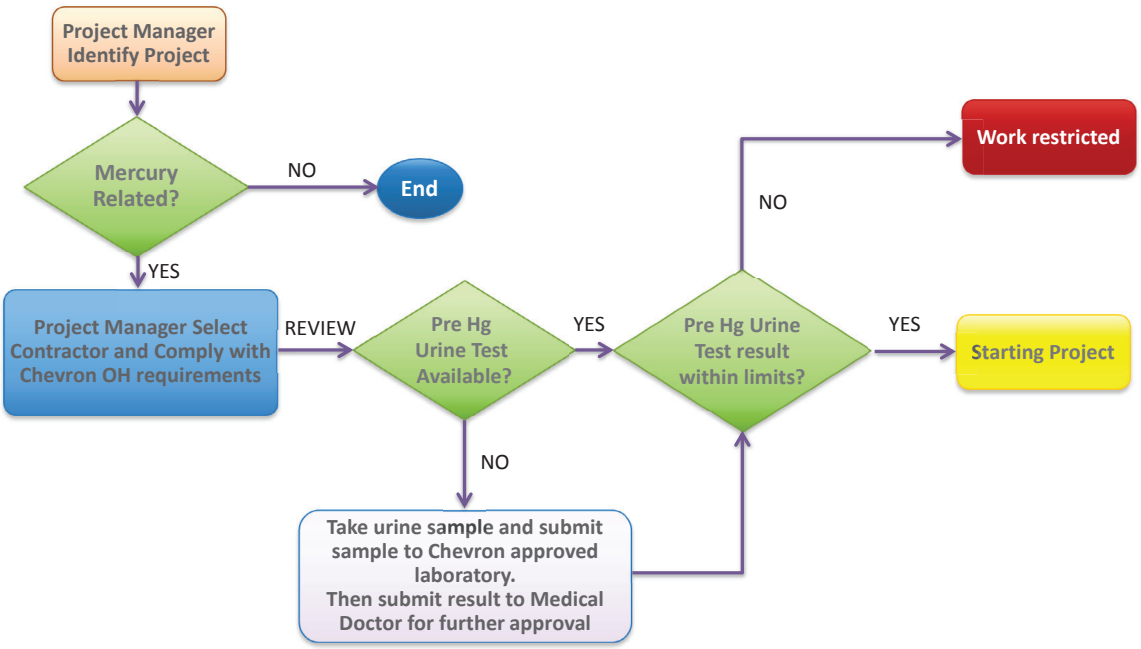
Project Manager Identify Project
Mercury Related?
NO
End
YES
Project Manager Select Contractor and Comply with Chevron OH requirements
REVIEW
Pre Hg Urine Test Available?
YES
Pre Hg Urine Test result within limits?
YES
Starting Project
NO
Work restricted
NO
Take urine sample and submit sample to Chevron approved laboratory.
Then submit result to Medical Doctor for further approval

ภาคผนวก 23

รายงานการตรวจวัดทางสุขศาสตร์อุตสาหกรรม (Occupational Hygiene Monitoring)

รายงานผลการตรวจวัดและวิเคราะห์ระดับความเข้มข้นของสารเคมีอันตราย
ในบรรยากาศของสถานที่ทำงานและสถานที่เก็บรักษาสารเคมีอันตรายของ<u>แหล่งเบญจมาศ</u>

ชื่อสถานประกอบกิจการ .... บริษัท เชฟรอนประเทศไทยสำรวจและผลิต จำกัด.....เลขนิติบุคคล.....ประเภทกิจการ.....สำรวจและผลิตน้ำมันและก๊าซธรรมชาติ...
ตั้งอยู่เลขที่...19 อาคาร 3... หมู่ที่.....ถนน.....รัชดาภิเษก.....แขวง/ตำบล.....จตุจักร.....เขต/อำเภอ...จตุจักร.....จังหวัด...กรุงเทพมหานคร...
รหัสไปรษณีย์...10900....โทรศัพท์...0-2545-5555....ได้ตรวจวัดและวิเคราะห์ความเข้มข้นของสารเคมีอันตรายในบรรยากาศของสถานที่ทำงานและสถานที่เก็บรักษาสารเคมีอันตราย โดย

- ดำเนินการเอง
  - นิติบุคคลที่ได้รับใบอนุญาตตามมาตรา 11 แห่งพระราชบัญญัติความปลอดภัย อาชีวอนามัย และสภาพแวดล้อมในการทำงาน พ.ศ.2554

ชื่อนิติบุคคลผู้ให้บริการ .....เลขทะเบียนนิติบุคคล.....

ขอแจ้งรายงานผลการตรวจวัดและวิเคราะห์ระดับความเข้มข้นของสารเคมีอันตราย ซึ่งมีรายละเอียดดังนี้

ชื่อสาร	**วันที่เก็บตัวอย่าง**	**จุดที่เก็บตัวอย่าง**	**จำนวนลูกจ้างที่สัมผัสหรือเกี่ยวข้องกับสารเคมีอันตราย**	**ชื่อเครื่องมือและวัสดุอุปกรณ์ที่ใช้เก็บตัวอย่าง**	**อัตราดูดอากาศ (L/min)**	**ระยะเวลาที่เก็บตัวอย่าง (ชั่วโมง)**	**วันที่วิเคราะห์**	**ชื่อเครื่องมือวิเคราะห์**	**ระดับความเข้มข้นที่วิเคราะห์ได้ *****	**ขีดจำกัดความเข้มข้น (TLV_S) (8 ชั่วโมงการทำงาน) *****	**การประเมินผล (เกิน/ไม่เกิน)**
Benzene	25 มิถุนายน 2568	MOT (Maintenance and Operation Team)	6	Personal air sampling pump/ Charcoal tube	0.2	8	5 กรกฎาคม 2568	Gas Chromatography, FID	<0.001	1 ppm	ไม่เกิน
Total Hydrocarbons	25 มิถุนายน 2568	MOT (Maintenance	6	Personal air sampling pump/ Charcoal tube	0.2	8	5 กรกฎาคม 2568	Gas Chromatogra	<0.6	300 ppm	ไม่เกิน

ชื่อสาร	วันที่เก็บตัวอย่าง	จุดที่เก็บตัวอย่าง	จำนวนลูกจ้างที่สัมผัสหรือเกี่ยวข้องกับสารเคมีอันตราย	ชื่อเครื่องมือและวัสดุอุปกรณ์ที่ใช้เก็บตัวอย่าง	อัตราดูดอากาศ (L/min)	ระยะเวลาที่เก็บตัวอย่าง (ชั่วโมง)	วันที่วิเคราะห์	ชื่อเครื่องมือวิเคราะห์	ระดับความเข้มข้นที่วิเคราะห์ได้ ***	ขีดจำกัดความเข้มข้น (TLV_S) (8 ชั่วโมงการทำงาน) ***	การประเมินผล (เกิน/ไม่เกิน)
		and Operation Team)						phy, FID			
Mercury	20 กันยายน 2568	MOT (Maintenance and Operation Team)	6	Personal air sampling pump/ Hopcalite tube	0.2	8	30 กันยายน 2568	Gas Chromatography, FID	<0.0001	0.025 mg/m^3	ไม่เกิน

หมายเหตุ ๑. นายจ้างดำเนินการตรวจวัดและวิเคราะห์ระดับความเข้มข้นของสารเคมีอันตรายเอง ให้แนบเอกสารหรือหลักฐานแสดงคุณสมบัติของผู้ดำเนินการตรวจวัดสารเคมีอันตรายและผู้ดำเนินการตรวจวิเคราะห์สารเคมีอันตรายทางห้องปฏิบัติการประจำสถานประกอบกิจการมาพร้อมเอกสาร (สอ ๓) นี้

๒. นิติบุคคลที่ได้รับใบอนุญาตตามมาตรา ๑๑ แห่งพระราชบัญญัติความปลอดภัย อาชีวอนามัย และสภาพนวคล้อมในการทำงาน พ.ศ. ๒๕๕๔ เป็นผู้ดำเนินการตรวจวัดและวิเคราะห์ระดับความเข้มข้นของสารเคมีอันตราย ให้แนบสำเนาใบอนุญาตเป็นผู้ให้บริการตรวจวัดและวิเคราะห์ฯ มาพร้อมเอกสาร (สอ.๓) นี้

๓. เครื่องหมาย * หมายถึง หน่วย ลิตร/นาที

เครื่องหมาย ** หมายถึง นาทีหรือชั่วโมง

เครื่องหมาย *** หมายถึง mg/m^3 หรือ $\mu g/m^3$ หรือ f/cm^3 หรือ mppcf หรือ ppm หรือ ppb

mg/m^3 = มิลลิกรัมต่ออากาศหนึ่งลูกบาศก์เมตร

$\mu g/m^3$ = ไมโครกรัมต่ออากาศหนึ่งลูกบาศก์เมตร

f/cm^3 = จำนวนเส้นใยต่ออากาศหนึ่งลูกบาศก์เซนติเมตร

mppcf = จำนวนล้านอนุภาคต่อปริมาตรของอากาศหนึ่งลูกบาศก์ฟุต

ppm = ส่วนในล้านส่วนโดยปริมาตร

ppb = ส่วนในพันล้านส่วนโดยปริมาตร

ภาคผนวก 24

สรุปผลตรวจสุขภาพของพนักงาน (Medical Report)

Chevron Thailand Exploration and Production, Ltd.

Health & Medical
Report

Name : [redacted]
Location : Thailand
Report for : **2025**

1.Occupational Health Program

1.1 Medical Surveillance Program

Programs*	Location				Total	Result (Normal / Abnormal)
	BELQ	NPLQ	PALQ	BUK		
Mercury Surveillance (20 ug/gCr)	32	68	132	18	250	(250)
Vision Test for crane operator	48	24	37	-	109	(107 / 2**)
Respiratory Fit Test	-	21	-	-	21	(21 / 0)
Hearing Test	8	7	4	-	19	(19 / 0)

Remarks:

* In 2025, the Respiratory Fit Test conducted for the Emergency Response Team (ERT) at NPLQ. As the program follows a two-years schedule, consequently, for other locations, the fit test for ERT group will resume in the next cycle. For other work scopes, such as welding or vessel cleaning, where the workforce is employed by business partners or vendors, the Respiratory Fit Test will be conducted by their respective employers.

** The vision test with abnormal result were the cases persued with further visual re-test with ophthalmologist and eyesight correction, for example need new glasses.

1.2 Potable water

Program	Location								Total	Result (Normal / Abnormal)
	BELQ		NPLQ		PALQ		BUK			
	9 May	5 Nov	9 May	5 Nov	9 May	5 Nov	9 May	5 Nov		
Drinking water analysis	1	1	1	1	1	1	1	1	8	(7/1*)

Remarks:
*The pH of drinking water at PALQ was initially 9.2. After adjustment by the mechanical technician at the water maker, the pH was corrected to 7.0, in compliance with Thailand's drinking water quality standards.

-End-

ภาคผนวก 25

รายงานประจำเดือนที่เสนอต่อกรมเชื้อเพลิงธรรมชาติ (DMF Monthly Report)

HSE Monthly Report

Company Name: บริษัท เชฟรอนประเทศไทยสำรวจและผลิต จำกัด
Contact Name/Tel.: [redacted]
Month/Year: มกราคม 2568

Parameter	Unit	Production						Drilling		Exploration	Other							
		มูงทอง	ไพลิน	ไพลินตอนเหนือ	เบญจมาศ	ชบา	ยะลาและธีสตัตราด	SDC	Krathong	G2/65	AR Rigs/Rigless	AR (BL 10-13)	AR (Non BL10-13)	Completions	Logistics	Onshore Operations	Major Project	Bangkok
1. operational performance																		
Gas Production	mmscf	8.8	6,549.1	6,190.4	1,674.6	-	31.8											
Crude Oil Production	bbl	-	-	-	419,867.7	-	-											
Condensate Production	bbl	1,196.0	303,833.0	166,484.0	-	-	1,196.0											
2. Safety Performance																		
Worked Hours																		
Company Worked Hours	Man Hour	-	56,430	50,292	74,052	-	-	1,740	2,112	-	-	3,864	-	2,352	828	5,562	198	119,988
Contractor Worked hours	Man Hour	-	710,226	493,218	604,494	-	1,812	47,568	48,600	-	-	177,864	-	25,428	87,792	59,052	-	104,940
Total	Man Hour	-	766,656	543,510	678,546	-	1,812	49,308	50,712	-	-	181,728	-	27,780	88,620	64,614	198	224,928
Accidents / Incidents																		
Fatality (FAT)	case																	
Lost Work Day Case (LWDC)	case																	
Lost Time Incident (LTI)	case																	
Restriced Work Day Case (RWDC)	case							1										
Medical Treatment Case (MTC)	case								1									
First Aid Case (FAC)	case		1															
Near Miss	case		1		1									1			1	
High potential Incident (HPI)	case																	
Total Recordable Injury (TRI)	case		0	0	0													
Lost Time Injury Frequency (LTIF)	-	-	0	0	0	-	-	-	0	-	-	0	-	0	0	0	0	0
Total Recordable Injury Rate (TRIR)	-	-	0	0	0	-	-	0.00	-	-	-	0	-	0	0	0	0	0
Oil spill	case															1		
Oil Spill Volume	bbl															0.031		
Chemical spilll	case																	
Chemical Spill Volume	bbl																	
Fire	case		1		1													
3. Environmental Performance																		
Produced water																		
Total Produced Water	bbl	166	392,677	264,904	1,598,546	-	9,430											
Injection	bbl	166	392,677	264,904	1,598,546	-	9,430											
% Injection	-	100	100	100	100	-	100	-	-	-	-	-	-	-	-	-	-	-
Discharge	bbl																	
% Discharge	-	0	0	0	0	-	0	-	-	-	-	-	-	-	-	-	-	-
Treatment/Boiling	bbl																	
Disposal	Ton																	
Hg Content	ppb																	
As Content	ppb																	
TPH	ppm																	
Oil & Grease	ppm																	

HSE Monthly Report

Company Name: บริษัท เชฟรอนประเทศไทยสำรวจและผลิต จำกัด

Contact Name/Tel.: [redacted]

Month/Year: กุมภาพันธ์ 2568

Parameter	Unit	Production						Drilling		Exploration	Other							
		ยูงทอง	ไพลิน	ไพลินตอนเหนือ	เบญจมาศ	ชบา	ยะลาและอีสต์ดราด	SDC	Krathong	G2/65	AR Rigs/Rigless	AR (BL 10-13)	AR (Non BL10-13)	Completions	Logistics	Onshore Operations	Major Project	Bangkok
1. operational performance																		
Gas Production	mmscf	8.8	6,304.0	5,271.4	1,331.0	-	31.8											
Crude Oil Production	bbl	-	-	-	372,491.7	-	-											
Condensate Production	bbl	-	297,893.0	145,511.0	-	-	1,517.0											
2. Safety Performance																		
Worked Hours																		
Company Worked Hours	Man Hour	-	50,094	43,164	101,178	-	-	1,956	1,956	-	-	4,164	-	1,044	828	5,373	198	119,988
Contractor Worked hours	Man Hour	-	634,392	446,292	446,292	-	1,812	43,956	45,228	-	-	247,976	-	14,520	78,908	43,228	-	104,940
Total	Man Hour	-	684,486	489,456	547,470	-	1,812	45,912	47,184	-	-	252,140	-	15,564	79,736	48,601	198	224,928
Accidents / Incidents																		
Fatality (FAT)	case																	
Lost Work Day Case (LWDC)	case																	
Lost Time Incident (LTI)	case																0	0
Restriced Work Day Case (RWDC)	case																	
Medical Treatment Case (MTC)	case			1														
First Aid Case (FAC)	case																	
Near Miss	case																	
High potential Incident (HPI)	case																	
Total Recordable Injury (TRI)	case																	
Lost Time Injury Frequency (LTIF)	-	-	0	0	0	-	0	0	0	-	-	0	-	0	0	0	0.0	0
Total Recordable Injury Rate (TRIR)	-	-	0	0	0	-	0	0	0	-	-	0	-	0	0	0.0	0.0	0
Oil spill	case				1													
Oil Spill Volume	bbl				0.002													
Chemical spilll	case				1													
Chemical Spill Volume	bbl				0.06													
Fire	case																	
3. Environmental Performance																		
Produced water																		
Total Produced Water	bbl	166	312,254	284,258	596,512	-	9,430											
Injection	bbl	166	312,254	284,258	596,512	-	9,430											
% Injection	-	100	100	100	100	-	100	-	-	-	-	-	-	-	-	-	-	-
Discharge	bbl																	
% Discharge	-	0	0	0	0	-	0	-	-	-	-	-	-	-	-	-	-	-
Treatment/Boiling	bbl																	
Disposal	Ton																	
Hg Content	ppb																	
As Content	ppb																	
TPH	ppm																	
Oil & Grease	ppm																	

HSE Monthly Report

Company Name: บริษัท เชฟรอนประเทศไทยสำรวจและผลิต จำกัด

Contact Name/Tel.: [redacted]

Month/Year: มีนาคม 2568

Parameter	Unit	Production						Drilling		Exploration	Other							
		ยูงทอง	ไพลิน	ไพลินตอนเหนือ	เบญจมาศ	ซบา	ยะลาและอีสต์ตราด	SDC	Krathong	G2/65	AR Rigs/Rigless	AR (BL 10-13)	AR (Non BL10-13)	Completions	Logistics	Onshore Operations	Major Project	Bangkok
1. operational performance																		
Gas Production	mmscf	8.8	6,952.2	6,376.3	559.5	-	31.8											
Crude Oil Production	bbl	-	-	-	125,800.7	-	-											
Condensate Production	bbl	-	329,561.0	175,525.0	-	-	1,517.0											
2. Safety Performance																		
Worked Hours																		
Company Worked Hours	Man Hour	-	3,510	3,068	6,396	-	-	2,268	2,124	-	-	4,164	-	660	828	5,778	198	119,988
Contractor Worked hours	Man Hour	-	48,061	33,540	33,540	-	1,812	51,048	49,776	-	-	247,976	-	12,864	81,381	58,639	-	104,940
Total	Man Hour	-	51,571	36,608	39,936	-	1,812	53,316	51,900	-	-	252,140	-	13,524	82,209	64,417	198	224,928
Accidents / Incidents																		
Fatality (FAT)	case																	
Lost Work Day Case (LWDC)	case																	
Lost Time Incident (LTI)	case																0	0
Restriced Work Day Case (RWDC)	case																	
Medical Treatment Case (MTC)	case																	
First Aid Case (FAC)	case				9													
Near Miss	case																	
High potential Incident (HPI)	case																	
Total Recordable Injury (TRI)	case																	
Lost Time Injury Frequency (LTIF)	-	-	0	0	0	-	0	0	0	-	-	0	-	0	0	0	0	0
Total Recordable Injury Rate (TRIR)	-	-	0	0	0	-	0	0	0	-	-	0	-	0	0	0	0	0
Oil spill	case																	
Oil Spill Volume	bbl																	
Chemical spilll	case																	
Chemical Spill Volume	bbl																	
Fire	case																	
3. Environmental Performance																		
Produced water																		
Total Produced Water	bbl	-	355,327	327,776	683,103	-	7,759											
Injection	bbl	-	355,327	327,776	683,103	-	7,759											
% Injection	-	-	100	100	100	-	100	-	-	-	-	-	-	-	-	-	-	-
Discharge	bbl																	
% Discharge	-	-	0	0	0	-	0	-	-	-	-	-	-	-	-	-	-	-
Treatment/Boiling	bbl																	
Disposal	Ton																	
Hg Content	ppb																	
As Content	ppb																	
TPH	ppm																	
Oil & Grease	ppm																	

HSE Monthly Report

Company Name: บริษัท เชฟรอนประเทศไทยสำรวจและผลิต จำกัด

Contact Name/Tel.: [redacted]

Month/Year: เมษายน 2568

Parameter	Unit	Production						Drilling		Exploration	Other							
		ยูงทอง	ไพลิน	ไพลินตอนเหนือ	เบญจมาศ	ซบา	ยะลาและอีสต์ตราด	SDC	Krathong	G2/65	AR Rigs/Rigless	AR (BL 10-13)	AR (Non BL10-13)	Completions	Logistics	Onshore Operations	Major Project	Bangkok
1. operational performance																		
Gas Production	mmscf	8.5	5,617.6	5,607.6	1,481.0	-	31.8											
Crude Oil Production	bbl	-	-	-	412,043.2	-	-											
Condensate Production	bbl	-	270,621.0	149,702.0	-		710.0											
2. Safety Performance																		
Worked Hours																		
Company Worked Hours	Man Hour	-	3,874	3,107	5,239	-	-	2,136	2,112	-	-	2,226	-	1,764	828	4,014	198	119,988
Contractor Worked hours	Man Hour	-	47,476	32,110	32,110	-	1,812	47,736	48,156	-	-	186,768	-	22,956	79,182	38,157	-	104,940
Total	Man Hour	-	51,350	35,217	37,349	-	1,812	49,872	50,268	-	-	188,994	-	24,720	80,010	42,171	198	224,928
Accidents / Incidents																		
Fatality (FAT)	case																	
Lost Work Day Case (LWDC)	case																	
Lost Time Incident (LTI)	case																0	0
Restriced Work Day Case (RWDC)	case																	
Medical Treatment Case (MTC)	case																	
First Aid Case (FAC)	case		1														1	
Near Miss	case																	
High potential Incident (HPI)	case																	
Total Recordable Injury (TRI)	case																	
Lost Time Injury Frequency (LTIF)	-	-	0	0	0	-	0	0	0	-	-	0	-	0	0	0	0	0
Total Recordable Injury Rate (TRIR)	-	-	-	0	0	-	0	0	0	-	-	0	-	0	0	0.0	0	0
Oil spill	case																	
Oil Spill Volume	bbl																	
Chemical spilll	case																	
Chemical Spill Volume	bbl																	
Fire	case																	
3. Environmental Performance																		
Produced water																		
Total Produced Water	bbl	166	307,911	247,612	1,532,697	-	7,759											
Injection	bbl	166	307,911	247,612	1,532,697	-	7,759											
% Injection	-	100	100	100	100	-	100	-	-	-	-	-	-	-	-	-	-	-
Discharge	bbl																	
% Discharge	-	0	0	0	0	-	0	-	-	-	-	-	-	-	-	-	-	-
Treatment/Boiling	bbl																	
Disposal	Ton																	
Hg Content	ppb																	
As Content	ppb																	
TPH	ppm																	
Oil & Grease	ppm																	

HSE Monthly Report

Company Name: บริษัท เชฟรอนประเทศไทยสำรวจและผลิต จำกัด

Contact Name/Tel.: [redacted]

Month/Year: พฤษภาคม 2568

Parameter	Unit	Production						Drilling		Exploration	Other							
		ยูงทอง	ไพลิน	ไพลินตอนเหนือ	เบญจมาศ	ซบา	ยะลาและอีสต์ตร	SDC	Krathong	G2/65	AR Rigs/Rigless	AR (BL 10-13)	AR (Non BL10-13)	Completions	Logistics	Onshore Operations	Major Project	Bangkok
1. operational performance																		
Gas Production	mmscf	8.3	5,760.9	6,219.0	1,731.3	-	31.6											
Crude Oil Production	bbl	-	-	-	377,156.4	-	-											
Condensate Production	bbl	619.0	278,729.0	180,015.0	-		619.0											
2. Safety Performance																		
Worked Hours																		
Company Worked Hours	Man Hour	-	4,043	3,029	5,694	-	-	1,656	2,076	-	-	4,128	5,760	2,256	828	4,012	198	119,988
Contractor Worked hours	Man Hour	-	48,997	33,280	33,280	-	1,812	48,636	49,116	-	-	180,172	5,760	28,296	80,758	37,048	-	104,940
Total	Man Hour	-	53,040	36,309	38,974	-	1,812	50,292	51,192	-	-	184,300	11,520	30,552	81,586	41,060	198	224,928
Accidents / Incidents																		
Fatality (FAT)	case																	
Lost Work Day Case (LWDC)	case																	
Lost Time Incident (LTI)	case																	
Restriced Work Day Case (RWDC)	case																	
Medical Treatment Case (MTC)	case		1															
First Aid Case (FAC)	case				1													
Near Miss	case								1									
High potential Incident (HPI)	case																	
Total Recordable Injury (TRI)	case	-	0	0	0	0	0	0	0	0	0	0	0	0	0	0	0	0
Lost Time Injury Frequency (LTIF)	-	-	0	0	0	-	0	0	0	-	-	0	0	0	0	0	0	0
Total Recordable Injury Rate (TRIR)	-	-	0	0	0	-	0	-	0	-	-	0	0	0	0	0	0	0
Oil spill	case																	
Oil Spill Volume	bbl																	
Chemical spilll	case																	
Chemical Spill Volume	bbl																	
Fire	case		1															
3. Environmental Performance																		
Produced water																		
Total Produced Water	bbl	154	345,594	258,815	1,300,857	-	7,264											
Injection	bbl	154	345,594	258,815	1,300,857	-	7,264											
% Injection	-	100	100	100	100	-	100	-	-	-	-	-	-	-	-	-	-	-
Discharge	bbl																	
% Discharge	-	0	0	0	0	-	0	-	-	-	-	-	-	-	-	-	-	-
Treatment/Boiling	bbl																	
Disposal	Ton																	
Hg Content	ppb																	
As Content	ppb																	
TPH	ppm																	
Oil & Grease	ppm																	

HSE Monthly Report

Company Name: บริษัท เชฟรอนประเทศไทยสำรวจและผลิต จำกัด

Contact Name/Tel.: [redacted]

Month/Year: มิถุนายน 2568

Parameter	Unit	Production						Drilling		Exploration	Other							
		ยูงทอง	ไพลิน	ไพลินตอนเหนือ	เบญจมาศ	ชบา	ยะลาและอีสต์ดราด	SDC	Krathong	G2/65	AR Rigs/Rigless	AR (BL 10-13)	AR (Non BL10-13)	Completions	Logistics	Onshore Operations	Major Project	Bangkok
1. operational performance																		
Gas Production	mmscf	8.8	5,875.1	5,600.4	1,623.6	-	31.8											
Crude Oil Production	bbl	-	-	-	416,807.1	-	-											
Condensate Production	bbl		280,138.0	163,820.0	-	-	1,192.0											
2. Safety Performance																		
Worked Hours																		
Company Worked Hours	Man Hour	-	3,315	3,250	5,226	-	-	2,064	1,608	-	-	4,128		2,256	828	5,490	198	119,988
Contractor Worked hours	Man Hour	-	46,150	20,111	20,111	-	1,812	45,960	48,528	-	-	180,172	5,760	26,724	78,305	44,793	-	104,940
Total	Man Hour	-	49,465	23,361	25,337	-	1,812	48,024	50,136	-	-	184,300	5,760	28,980	79,133	50,283	198	224,928
Accidents / Incidents																		
Fatality (FAT)	case																	
Lost Work Day Case (LWDC)	case																	
Lost Time Incident (LTI)	case																	
Restriced Work Day Case (RWDC)	case																	
Medical Treatment Case (MTC)	case							1										
First Aid Case (FAC)	case		1		1			1						1				
Near Miss	case													1				
High potential Incident (HPI)	case																	
Total Recordable Injury (TRI)	case																	
Lost Time Injury Frequency (LTIF)	-	-	0	0	0	-	0	0	0	-	-	0	0	0	0	0	0.0	0
Total Recordable Injury Rate (TRIR)	-	-	-	0	0	-	0	0	0	-	-	0	0	0	0	0.0	0.0	0
Oil spill	case																	
Oil Spill Volume	bbl																	
Chemical spilll	case		1															
Chemical Spill Volume	bbl																	
Fire	case												1					
3. Environmental Performance																		
Produced water																		
Total Produced Water	bbl	150	349,786	273,366	1,591,185	-	7,250											
Injection	bbl	150	349,786	273,366	1,591,185	-	7,250											
% Injection	-	100	100	100	100	-	100	-	-	-	-	-	-	-	-	-	-	-
Discharge	bbl																	
% Discharge	-	0	0	0	0	-	0	-	-	-	-	-	-	-	-	-	-	-
Treatment/Boiling	bbl																	
Disposal	Ton																	
Hg Content	ppb																	
As Content	ppb																	
TPH	ppm																	
Oil & Grease	ppm																	

HSE Monthly Report

Company Name: บริษัท เชฟรอนประเทศไทยสำรวจและผลิต จำกัด
Contact Name/Tel.: [redacted]
Month/Year: กรกฎาคม 2568

Parameter	Unit	Production						Drilling		Exploration	Other							
		ยูงทอง	ไพลิน	ไพลินตอนเหนือ	เบญจมาศ	ชบา	ยะลาและอีสต์ดราด	SDC	Krathong	G2/65	AR Rigs/Rigless	AR (BL 10-13)	AR (Non BL10-13)	Completions	Logistics	Onshore Operations	Major Project	Bangkok
1. operational performance																		
Gas Production	mmscf	-	6,341.9	5,586.6	1,732.0	-	-											
Crude Oil Production	bbl	-	-	-	509,116.4	-	-											
Condensate Production	bbl		284,957.0	153,396.0	-	-	1,899.0											
2. Safety Performance																		
Worked Hours																		
Company Worked Hours	Man Hour	-	3,666	3,614	6,383	-	-	1,692	1,692	-	-	1,488		2,232	1,008	5,571	198	118,800
Contractor Worked hours	Man Hour	-	47,008	35,048	35,048	-	1,812	50,532	46,212	-	-	77,292	5,760	23,808	78,262	45,557	-	103,950
Total	Man Hour	-	50,674	38,662	41,431	-	1,812	52,224	47,904	-	-	78,780	5,760	26,040	79,270	51,128	198	222,750
Accidents / Incidents																		
Fatality (FAT)	case																	
Lost Work Day Case (LWDC)	case																	
Lost Time Incident (LTI)	case																	
Restriced Work Day Case (RWDC)	case												1					
Medical Treatment Case (MTC)	case																	
First Aid Case (FAC)	case							1										
Near Miss	case																	
High potential Incident (HPI)	case																	
Total Recordable Injury (TRI)	case																	
Lost Time Injury Frequency (LTIF)	-	-	0	0	0	-	0	0	0	-	-	0	0	0	0	0	0	0
Total Recordable Injury Rate (TRIR)	-	-	0	-	-	-	0	0	0	-	-	0	0	0	0	0	0	0
Oil spill	case																	
Oil Spill Volume	bbl																	
Chemical spilll	case																	
Chemical Spill Volume	bbl																	
Fire	case				1													
3. Environmental Performance																		
Produced water																		
Total Produced Water	bbl	-	333,582	276,939	1,703,141	-	7,200											
Injection	bbl	-	333,582	276,939	1,703,141	-	7,200											
% Injection	-	-	100	100	100	-	100	-	-	-	-	-	-	-	-	-	-	-
Discharge	bbl																	
% Discharge	-	-	0	0	0	-	0	-	-	-	-	-	-	-	-	-	-	-
Treatment/Boiling	bbl																	
Disposal	Ton																	
Hg Content	ppb																	
As Content	ppb																	
TPH	ppm																	
Oil & Grease	ppm																	

HSE Monthly Report

Company Name: บริษัท เชฟรอนประเทศไทยสำรวจและผลิต จำกัด
Contact Name/Tel.: [redacted]
Month/Year: สิงหาคม 2568

Parameter	Unit	Production						Drilling		Exploration	Other							
		ยูงทอง	ไพลิน	ไพลินตอนเหนือ	เบญจมาศ	ชบา	ยะลาและอีสต์ตราด	SDC	Krathong	G2/65	AR Rigs/Rigless	AR (BL 10-13)	AR (Non BL10-13)	Completions	Logistics	Onshore Operations	Major Project	Bangkok
1. operational performance																		
Gas Production	mmscf	-	6,229.5	5,303.3	1,764.6	-	-											
Crude Oil Production	bbl	-	-	-	521,205.6	-	-											
Condensate Production	bbl		289,496.0	149,308.0	-	-	285.0											
2. Safety Performance																		
Worked Hours																		
Company Worked Hours	Man Hour	-	3,497	3,211	5,941	-	-	1,452	1,500	-	-	4,728		3,216	1,008	5,373	198	117,810
Contractor Worked hours	Man Hour	-	47,502	35,529	35,529	-	1,812	47,940	48,156	-	-	263,640	5,760	25,440	80,345	40,142		10
Total	Man Hour	-	50,999	38,740	41,470	-	1,812	49,392	49,656	-	-	268,368	5,760	28,656	81,353	45,515	198	222,750
Accidents / Incidents																		
Fatality (FAT)	case																	
Lost Work Day Case (LWDC)	case																	
Lost Time Incident (LTI)	case																	
Restriced Work Day Case (RWDC)	case							1										
Medical Treatment Case (MTC)	case																	
First Aid Case (FAC)	case												1					
Near Miss	case				1													
High potential Incident (HPI)	case																	
Total Recordable Injury (TRI)	case	0	0	0	0	0	0	1	0	0	0	0	0	0	0	0	0	0
Lost Time Injury Frequency (LTIF)	-	-	0	0	0	-	0	0	0	-	-	0	0	0	0	0	0	0
Total Recordable Injury Rate (TRIR)	-	-	0	0	0	-	0	4.05	0	-	-	0	0	0	0	0	0	0
Oil spill	case																	
Oil Spill Volume	bbl																	
Chemical spilll	case																	
Chemical Spill Volume	bbl																	
Fire	case																	
3. Environmental Performance																		
Produced water																		
Total Produced Water	bbl	-	323,197	307,032	1,701,623	-	7,200											
Injection	bbl	-	323,197	307,032	1,701,623	-	7,200											
% Injection	-	-	100	100	100	-	100	-	-	-	-	-	-	-	-	-	-	-
Discharge	bbl																	
% Discharge	-	-	0	0	0	-	0	-	-	-	-	-	-	-	-	-	-	-
Treatment/Boiling	bbl																	
Disposal	Ton																	
Hg Content	ppb																	
As Content	ppb																	
TPH	ppm																	
Oil & Grease	ppm																	

HSE Monthly Report

Company Name: บริษัท เชฟรอนประเทศไทยสำรวจและผลิต จำกัด

Contact Name/Tel.: [redacted]

Month/Year: กันยายน 2568

Parameter	Unit	Production						Drilling		Exploration	Other							
		ยูงทอง	ไพลิน	ไพลินตอนเหนือ	เบญจมาศ	ซบา	ยะลาและอีสต์ดราด	SDC	Krathong	G2/65	AR Rigs/Rigless	AR (BL 10-13)	AR (Non BL10-13)	Completions	Logistics	Onshore Operations	Major Project	Bangkok
1. operational performance																		
Gas Production	mmscf	-	4,026.2	2,113.4	1,596.9	46.0	-											
Crude Oil Production	bbl	-	-	-	545,094.5	-	-											
Condensate Production	bbl		192,053.0	70,162.0	-	-	285.0											
2. Safety Performance																		
Worked Hours																		
Company Worked Hours	Man Hour	-	3,926	5,330	4,694	-	-	1,680	1,548	-	-	3,252		2,184	1,008	5,679	198	117,810
Contractor Worked hours	Man Hour	-	44,265	46,761	46,761	-	1,812	48,108	47,028	-	-	199,224	5,760	15,660	78,988	41,768	-	102,960
Total	Man Hour	-	48,191	52,091	51,455	-	1,812	49,788	48,576	-	-	202,476	5,760	17,844	79,996	47,447	198	220,770
Accidents / Incidents																		
Fatality (FAT)	case																	
Lost Work Day Case (LWDC)	case												1					
Lost Time Incident (LTI)	case																	
Restriced Work Day Case (RWDC)	case																	
Medical Treatment Case (MTC)	case																	
First Aid Case (FAC)	case																	
Near Miss	case			1														
High potential Incident (HPI)	case																	
Total Recordable Injury (TRI)	case	0	0	0	0	0	0	0	0	0	0	0	1	0	0	0	0	0
Lost Time Injury Frequency (LTIF)	-	-	0	0	0	-	0	0	0	-	-	0	0	0	0	0	0	0
Total Recordable Injury Rate (TRIR)	-	-	0	0	0	-	0	-	0	-	-	0	34.72	0	0	0	0	0
Oil spill	case																	
Oil Spill Volume	bbl																	
Chemical spilll	case																	
Chemical Spill Volume	bbl																	
Fire	case																	
3. Environmental Performance																		
Produced water																		
Total Produced Water	bbl	2,856	184,893	139,293	1,485,045	459	7,125											
Injection	bbl	2,856	184,893	139,293	1,485,045	459	7,125											
% Injection	-	100	100	100	100	100	100	-	-	-	-	-	-	-	-	-	-	-
Discharge	bbl																	
% Discharge	-	0	0	0	0	0	0	-	-	-	-	-	-	-	-	-	-	-
Treatment/Boiling	bbl																	
Disposal	Ton																	
Hg Content	ppb																	
As Content	ppb																	
TPH	ppm																	
Oil & Grease	ppm																	

HSE Monthly Report

Company Name: บริษัท เชฟรอนประเทศไทยสำรวจและผลิต จำกัด

Contact Name/Tel.: [redacted]

Month/Year: ตุลาคม 2568

Parameter	Unit	Production						Drilling		Exploration	Other							
		ยูงทอง	ไพลิน	ไพลินตอนเหนือ	เบญจมาศ	ชบา	ยะลาและอีสต์ตราด	SDC	Krathong	G2/65	AR Rigs/Rigless	AR (BL 10-13)	AR (Non BL10-13)	Completions	Logistics	Onshore Operations	Major Project	Bangkok
1. operational performance																		
Gas Production	mmscf	-	6,229.4	5,247.4	2,028.7	138.2	-											
Crude Oil Production	bbl	234.0	-	-	513,175.2	5,897.0	3,228.0											
Condensate Production	bbl		296,023.0	143,032.0	-	-	302.0											
2. Safety Performance																		
Worked Hours																		
Company Worked Hours	Man Hour	-	3,380	3,250	4,395	-	-	1,620	1,548	-	-	5,880		1,980	1,188	5,571	198	105,336
Contractor Worked hours	Man Hour	-	49,153	32,019	32,019	-	1,812	49,788	48,312	-	-	332,808	-	18,348	78,594	40,019	-	92,664
Total	Man Hour	-	52,533	35,269	36,414	-	1,812	51,408	49,860	-	-	338,688	-	20,328	79,782	45,590	198	198,000
Accidents / Incidents																		
Fatality (FAT)	case																	
Lost Work Day Case (LWDC)	case																	
Lost Time Incident (LTI)	case																	
Restriced Work Day Case (RWDC)	case																	
Medical Treatment Case (MTC)	case																	
First Aid Case (FAC)	case				1													
Near Miss	case				1													
High potential Incident (HPI)	case																	
Total Recordable Injury (TRI)	case	0	0	0	0	0	0	0	0	0	0	0	0	0	0	0	0	0
Lost Time Injury Frequency (LTIF)	-	-	0	0	0	-	0	0	0	-	-	0	-	0	0	0	0	0
Total Recordable Injury Rate (TRIR)	-	-	0	0	0	-	0	-	0	-	-	0	-	0	0	0	0	0
Oil spill	case																	
Oil Spill Volume	bbl																	
Chemical spilll	case																	
Chemical Spill Volume	bbl																	
Fire	case																	
3. Environmental Performance																		
Produced water																		
Total Produced Water	bbl	-	316,999	345,955	1,468,146	-	-											
Injection	bbl	-	316,999	345,955	1,468,146	-	-											
% Injection	-	-	100	100	100	-	-	-	-	-	-	-	-	-	-	-	-	-
Discharge	bbl																	
% Discharge	-	-	0	0	0	-	-	-	-	-	-	-	-	-	-	-	-	-
Treatment/Boiling	bbl																	
Disposal	Ton																	
Hg Content	ppb																	
As Content	ppb																	
TPH	ppm																	
Oil & Grease	ppm																	

HSE Monthly Report

Company Name: บริษัท เชฟรอนประเทศไทยสำรวจและผลิต จำกัด
Contact Name/Tel.: [redacted]
Month/Year: พฤศจิกายน 2568

Parameter	Unit	Production						Drilling		Exploration	Other							
		ยูงทอง	ไพลิน	ไพลินตอนเหนือ	เบญจมาศ	ซบา	ยะลาและอีสต์ราด	SDC	Krathong	G2/65	AR Rigs/Rigless	AR (BL 10-13)	AR (Non BL10-13)	Completions	Logistics	Onshore Operations	Major Project	Bangkok
1. operational performance																		
Gas Production	mmscf	-	6,188.1	6,005.7	2,133.9	152.3	-											
Crude Oil Production	bbl	19.0	-	-	581,463.3	10,853.0	8,542.0											
Condensate Production	bbl		310,264.0	214,632.0	-	-	1,065.0											
2. Safety Performance																		
Worked Hours																		
Company Worked Hours	Man Hour	-	4,108	3,133	5,564	-	-	1,548	1,620	-	-	1,416		1,788	1,008	3,960	198	105,336
Contractor Worked hours	Man Hour	-	36,426	30,862	30,862	-	1,812	49,332	46,464	-	-	85,896	-	14,532	78,407	37,910	-	92,664
Total	Man Hour	-	40,534	33,995	36,426	-	1,812	50,880	48,084	-	-	87,312	-	16,320	79,415	41,870	198	198,000
Accidents / Incidents																		
Fatality (FAT)	case																	
Lost Work Day Case (LWDC)	case																	
Lost Time Incident (LTI)	case																	
Restriced Work Day Case (RWDC)	case																	
Medical Treatment Case (MTC)	case																	
First Aid Case (FAC)	case																	
Near Miss	case																	
High potential Incident (HPI)	case																	
Total Recordable Injury (TRI)	case	0	0	0	0	0	0	0	0	0	0	0	0	0	0	0	0	0
Lost Time Injury Frequency (LTIF)	-	-	0	-	0	-	0	0	0	-	-	0	-	0	0	0	0.0	0
Total Recordable Injury Rate (TRIR)	-	-	0	-	0	-	0	-	0	-	-	0	-	0	0	0.0	0.0	0
Oil spill	case																	
Oil Spill Volume	bbl																	
Chemical spilll	case																	
Chemical Spill Volume	bbl																	
Fire	case																	
3. Environmental Performance																		
Produced water																		
Total Produced Water	bbl	-	325,845	351,984	1,576,808	-	-											
Injection	bbl	-	325,845	351,984	1,576,808	-	-											
Injection	-	-	100	100	100	-	-	-	-	-	-	-	-	-	-	-	-	-
Discharge	bbl																	
Discharge	-	-	0	0	0	-	-	-	-	-	-	-	-	-	-	-	-	-
Treatment/Boiling	bbl																	
Disposal	Ton																	
Hg Content	ppb																	
As Content	ppb																	
TPH	ppm																	
Oil & Grease	ppm																	

HSE Monthly Report

Company Name: บริษัท เชฟรอนประเทศไทยสำรวจและผลิต จำกัด
Contact Name/Tel.: [redacted]
Month/Year: ธันวาคม 2568

Parameter	Unit	Production						Drilling		Exploration	Other							
		ยูงทอง	ไพลิน	ไพลินตอนเหนือ	เบญจมาศ	ซบา	ยะลาและอีสต์ดราด	SDC	Krathong	G2/65	AR Rigs/Rigless	AR (BL 10-13)	AR (Non BL10-13)	Completions	Logistics	Onshore Operations	Major Project	Bangkok
1. operational performance																		
Gas Production	mmscf	-	6,779.8	5,593.1	2,059.5	198.8	-											
Crude Oil Production	bbl	100.0	-	-	467,823.7	14,299.0	25,255.0											
Condensate Production	bbl		311,043.0	199,646.0	-	-	313.0											
2. Safety Performance																		
Worked Hours																		
Company Worked Hours	Man Hour	-	3,484	3,367	6,435	-	-	1,764	1,488	-	-	187		2,532	1,008	4,356	198	105,336
Contractor Worked hours	Man Hour	-	44,746	30,654	30,654	-	1,812	51,108	50,496	-	-	934	-	20,628	85,208	46,228	-	92,664
Total	Man Hour	-	48,230	34,021	37,089	-	1,812	52,872	51,984	-	-	1,121	-	23,160	86,216	50,584	198	198,000
Accidents / Incidents																		
Fatality (FAT)	case																	
Lost Work Day Case (LWDC)	case																	
Lost Time Incident (LTI)	case																	
Restriced Work Day Case (RWDC)	case																	
Medical Treatment Case (MTC)	case																	
First Aid Case (FAC)	case																	
Near Miss	case		1		1													
High potential Incident (HPI)	case																	
Total Recordable Injury (TRI)	case	0	0	0	0	0	0	0	0	0	0	0	0	0	0	0	0	0
Lost Time Injury Frequency (LTIF)	-	-	0	0	0	-	0	0	0	-	-	0	-	0	0	0	0	0
Total Recordable Injury Rate (TRIR)	-	-	0	0	0	-	0	-	0	-	-	0	-	0	0	0	0	0
Oil spill	case																	
Oil Spill Volume	bbl																	
Chemical spilll	case																	
Chemical Spill Volume	bbl																	
Fire	case																	
3. Environmental Performance																		
Produced water																		
Total Produced Water	bbl	-	355,350	355,154	1,590,282	-	-											
Injection	bbl	-	355,350	355,154	1,590,282	-	-											
Injection	-	-	100	100	100	-	-	-	-	-	-	-	-	-	-	-	-	-
Discharge	bbl																	
Discharge	-	-	0	0	0	-	-	-	-	-	-	-	-	-	-	-	-	-
Treatment/Boiling	bbl																	
Disposal	Ton																	
Hg Content	ppb																	
As Content	ppb																	
TPH	ppm																	
Oil & Grease	ppm																	

ภาคผนวก 26

ผลการวิเคราะห์คุณภาพสิ่งแวดล้อม (Environmental Monitoring)

APPENDIX A
SEDIMENT ANALYTICAL LABORATORY REPORTS

eurofins | Environment Testing

ANALYTICAL REPORT

PREPARED FOR

Attn: Ted Donn
Tetra Tech Inc
3697 Mt. Diablo Blvd.
Suite 150
Lafayette, California 94549

Generated 4/23/2025 6:29:48 AM

JOB DESCRIPTION

Gulf of Thailand - 2025

JOB NUMBER

350-1559-1

Eurofins Seattle Specialty Metals
5755 8th Street East
Tacoma WA 98424

See page two for job notes and contact information.

my EOL

Eurofins Seattle Specialty Metals

Job Notes

This report may not be reproduced except in full, and with written approval from the laboratory. The results relate only to the samples tested. For questions please contact the Project Manager at the e-mail address or telephone number listed on this page.

The test results in this report relate only to the samples as received by the laboratory and will meet all requirements of the methodology, with any exceptions noted. This report shall not be reproduced except in full, without the express written approval of the laboratory. All questions should be directed to the Eurofins Environment Testing Northwest, LLC Project Manager.

Authorization

Generated
4/23/2025 6:29:48 AM

Authorized for release by
Lilly-Anna LaCount, Project Manager
Lilly-Anna.Lacount@et.eurofinsus.com
(253)922-2310

Table of Contents

Cover Page 1
Table of Contents 3
Definitions/Glossary 4
Case Narrative 5
Detection Summary 7
Client Sample Results 13
QC Sample Results 23
QC Association Summary 35
Lab Chronicle 41
Certification Summary 49
Method Summary 50
Sample Summary 51
Field Data Sheets 52
Receipt Checklists 55

Definitions/Glossary

Client: Tetra Tech Inc
Project/Site: Gulf of Thailand - 2025

Job ID: 350-1559-1

Qualifiers

Metals

Qualifier	Qualifier Description
^+	Continuing Calibration Verification (CCV) is outside acceptance limits, high biased.
^2	Calibration Blank (ICB and/or CCB) is outside acceptance limits.
B	Compound was found in the blank and sample.
E	Result exceeded calibration range.
F1	MS and/or MSD recovery exceeds control limits.
J	Result is less than the RL but greater than or equal to the MDL and the concentration is an approximate value.

Glossary

Abbreviation	These commonly used abbreviations may or may not be present in this report.
☼	Listed under the "D" column to designate that the result is reported on a dry weight basis
%R	Percent Recovery
CFL	Contains Free Liquid
CFU	Colony Forming Unit
CNF	Contains No Free Liquid
DER	Duplicate Error Ratio (normalized absolute difference)
Dil Fac	Dilution Factor
DL	Detection Limit (DoD/DOE)
DL, RA, RE, IN	Indicates a Dilution, Re-analysis, Re-extraction, or additional Initial metals/anion analysis of the sample
DLC	Decision Level Concentration (Radiochemistry)
EDL	Estimated Detection Limit (Dioxin)
LOD	Limit of Detection (DoD/DOE)
LOQ	Limit of Quantitation (DoD/DOE)
MCL	EPA recommended "Maximum Contaminant Level"
MDA	Minimum Detectable Activity (Radiochemistry)
MDC	Minimum Detectable Concentration (Radiochemistry)
MDL	Method Detection Limit
ML	Minimum Level (Dioxin)
MPN	Most Probable Number
MQL	Method Quantitation Limit
NC	Not Calculated
ND	Not Detected at the reporting limit (or MDL or EDL if shown)
NEG	Negative / Absent
POS	Positive / Present
PQL	Practical Quantitation Limit
PRES	Presumptive
QC	Quality Control
RER	Relative Error Ratio (Radiochemistry)
RL	Reporting Limit or Requested Limit (Radiochemistry)
RPD	Relative Percent Difference, a measure of the relative difference between two points
TEF	Toxicity Equivalent Factor (Dioxin)
TEQ	Toxicity Equivalent Quotient (Dioxin)
TNTC	Too Numerous To Count

Job Narrative
350-1559-1

Analytical test results meet all requirements of the associated regulatory program listed on the Accreditation/Certification Summary Page unless otherwise noted under the individual analysis. Data qualifiers and/or narrative comments are included to explain any exceptions, if applicable.

- Matrix QC may not be reported if insufficient sample is provided or site-specific QC samples were not submitted. In these situations, to demonstrate precision and accuracy at a batch level, a LCS/LCSD may be performed, unless otherwise specified in the method.
- Surrogate and/or isotope dilution analyte recoveries (if applicable) which are outside of the QC window are confirmed unless attributed to a dilution or otherwise noted in the narrative.

Regulated compliance samples (e.g. SDWA, NPDES) must comply with the associated agency requirements/permits.

Receipt
The samples were received on 2/19/2025 3:15 PM. Unless otherwise noted below, the samples arrived in good condition, and, where required, properly preserved and on ice. The temperatures of the 8 coolers at receipt time were -12.8°C, -11.5°C, -9.8°C, -6.9°C, -4.0°C, -3.9°C, -3.4°C and -3.0°C.

Metals
Method 1631E: The matrix spike / matrix spike duplicate (MS/MSD) recoveries for analytical batch 350-5384 were outside control limits for one analyte. See QC Sample Results for detail. Sample matrix interference is suspected because the associated laboratory control sample (LCS) recovery is within acceptance limits.

Method 1638: The method blank for preparation batch 350-5206 and analytical batch 350-5338 contained Copper above the reporting limit (RL). Associated sample(s) were not re-extracted and/or re-analyzed because results were greater than 10X the value found in the method blank.

Method 1638: The continuing calibration blank (CCB) for analytical batch 350-5338 contained Manganese above the reporting limit (RL). All reported samples associated with this CCB were either ND for this analyte or contained this analyte at a concentration greater than 10X the value found in the CCB; therefore, re-analysis of samples was not performed.

Method 1638: The matrix spike / matrix spike duplicate (MS/MSD) recoveries and precision for preparation batch 350-5226 and analytical batch 350-6294 were outside control limits. Sample matrix interference and/or non-homogeneity are suspected because the associated laboratory control sample / laboratory sample control duplicate (LCS/LCSD) precision was within acceptance limits.

Method 1638: The continuing calibration blank (CCB) for analytical batch 350-6294 contained Manganese above the reporting limit (RL). All reported samples associated with this CCB were either ND for this analyte or contained this analyte at a concentration greater than 10X the value found in the CCB; therefore, re-analysis of samples was not performed.

Method 1638: The method blank for preparation batch 350-5226 and analytical batch 350-6294 contained Manganese above the reporting limit (RL). Associated sample(s) were not re-extracted and/or re-analyzed because results were greater than 10X the value found in the method blank.

Method 1638: The continuing calibration blank (CCB) for analytical batch 350-6294 contained Barium and Iron above the reporting limit (RL). All reported samples associated with this CCB were either ND for this analyte or contained this analyte at a concentration greater than 10X the value found in the CCB; therefore, re-analysis of samples was not performed.

Method 1640: The matrix spike / matrix spike duplicate (MS/MSD) recoveries for preparation batch 350-5184 and 350-5188 and analytical batch 350-5238 were outside control limits for one or more analytes. See QC Sample Results for detail. Sample matrix interference and/or non-homogeneity are suspected because the associated laboratory control sample (LCS) recovery is within acceptance limits.

Method 1640: The continuing calibration verification (CCV) associated with batch 350-5238 recovered above the upper control limit for Iron. The samples associated with this CCV were non-detects for the affected analytes; therefore, the data have been reported. The associated samples are impacted: SRWB-WB (350-1559-146) and SRWB-EQ (350-1559-147).

No additional analytical or quality issues were noted, other than those described above or in the Definitions/ Glossary page.

Job ID: 350-1559-1 (Continued)

Eurofins Seattle Specialty Metals

General Chemistry

No additional analytical or quality issues were noted, other than those described above or in the Definitions/ Glossary page.

Detection Summary

Client: Tetra Tech Inc
Project/Site: Gulf of Thailand - 2025

Job ID: 350-1559-1

Client Sample ID: SRWB-1CP2-SW-1 — Lab Sample ID: 350-1559-1

Analyte	Result	Qualifier	RL	MDL	Unit	Dil Fac	D	Method	Prep Type
Mercury	0.23	J F1	0.50	0.20	ng/L	1		1631E	Total/NA
Arsenic	1.9		0.70	0.63	ug/L	1		1640	Total/NA
Chromium	0.71	J	1.0	0.11	ug/L	1		1640	Total/NA
Nickel	0.20	J	0.50	0.15	ug/L	1		1640	Total/NA
Barium	7.3		0.50	0.088	ug/L	1		1640	Total/NA
Iron	1.1	J	5.0	0.81	ug/L	1		1640	Total/NA
Manganese	0.59		0.050	0.030	ug/L	1		1640	Total/NA

Client Sample ID: SRWB-1CP2-SW-20 — Lab Sample ID: 350-1559-2

Analyte	Result	Qualifier	RL	MDL	Unit	Dil Fac	D	Method	Prep Type
Mercury	0.20	J	0.50	0.20	ng/L	1		1631E	Total/NA
Arsenic	2.0	F1	0.70	0.63	ug/L	1		1640	Total/NA
Chromium	0.79	J	1.0	0.11	ug/L	1		1640	Total/NA
Copper	0.43	J	0.50	0.43	ug/L	1		1640	Total/NA
Nickel	0.22	J	0.50	0.15	ug/L	1		1640	Total/NA
Barium	7.1		0.50	0.088	ug/L	1		1640	Total/NA
Iron	0.98	J	5.0	0.81	ug/L	1		1640	Total/NA
Manganese	0.54		0.050	0.030	ug/L	1		1640	Total/NA

Client Sample ID: SRWB-1CP2-SW-40 — Lab Sample ID: 350-1559-3

Analyte	Result	Qualifier	RL	MDL	Unit	Dil Fac	D	Method	Prep Type
Arsenic	2.1		0.70	0.63	ug/L	1		1640	Total/NA
Chromium	0.78	J	1.0	0.11	ug/L	1		1640	Total/NA
Nickel	0.19	J	0.50	0.15	ug/L	1		1640	Total/NA
Barium	7.7		0.50	0.088	ug/L	1		1640	Total/NA
Manganese	0.47		0.050	0.030	ug/L	1		1640	Total/NA

Client Sample ID: SRWB-1CP2-SW-40-FD — Lab Sample ID: 350-1559-4

Analyte	Result	Qualifier	RL	MDL	Unit	Dil Fac	D	Method	Prep Type
Arsenic	1.8		0.70	0.63	ug/L	1		1640	Total/NA
Chromium	0.68	J	1.0	0.11	ug/L	1		1640	Total/NA
Nickel	0.20	J	0.50	0.15	ug/L	1		1640	Total/NA
Barium	7.0		0.50	0.088	ug/L	1		1640	Total/NA
Manganese	0.45		0.050	0.030	ug/L	1		1640	Total/NA

Client Sample ID: SRWB-1CP2-SW-B — Lab Sample ID: 350-1559-5

Analyte	Result	Qualifier	RL	MDL	Unit	Dil Fac	D	Method	Prep Type
Mercury	0.26	J	0.50	0.20	ng/L	1		1631E	Total/NA
Arsenic	2.2		0.70	0.63	ug/L	1		1640	Total/NA
Chromium	0.80	J	1.0	0.11	ug/L	1		1640	Total/NA
Lead	0.035	J	0.050	0.023	ug/L	1		1640	Total/NA
Nickel	0.21	J	0.50	0.15	ug/L	1		1640	Total/NA
Zinc	0.39	J	1.0	0.31	ug/L	1		1640	Total/NA
Barium	8.0		0.50	0.088	ug/L	1		1640	Total/NA
Iron	24		5.0	0.81	ug/L	1		1640	Total/NA
Manganese	2.0		0.050	0.030	ug/L	1		1640	Total/NA

This Detection Summary does not include radiochemical test results.

Detection Summary

Client: Tetra Tech Inc
Project/Site: Gulf of Thailand - 2025

Job ID: 350-1559-1

Client Sample ID: SRWB-3CP2-SW-1 — Lab Sample ID: 350-1559-6

Analyte	Result	Qualifier	RL	MDL	Unit	Dil Fac	D	Method	Prep Type
Mercury	0.37	J	0.50	0.20	ng/L	1		1631E	Total/NA
Arsenic	1.9		0.70	0.63	ug/L	1		1640	Total/NA
Chromium	0.70	J	1.0	0.11	ug/L	1		1640	Total/NA
Nickel	0.19	J	0.50	0.15	ug/L	1		1640	Total/NA
Barium	8.3		0.50	0.088	ug/L	1		1640	Total/NA
Manganese	0.58		0.050	0.030	ug/L	1		1640	Total/NA

Client Sample ID: SRWB-3CP2-SW-20 — Lab Sample ID: 350-1559-7

Analyte	Result	Qualifier	RL	MDL	Unit	Dil Fac	D	Method	Prep Type
Mercury	0.21	J	0.50	0.20	ng/L	1		1631E	Total/NA
Arsenic	2.2		0.70	0.63	ug/L	1		1640	Total/NA
Chromium	0.97	J	1.0	0.11	ug/L	1		1640	Total/NA
Nickel	0.20	J	0.50	0.15	ug/L	1		1640	Total/NA
Barium	8.0		0.50	0.088	ug/L	1		1640	Total/NA
Iron	3.8	J	5.0	0.81	ug/L	1		1640	Total/NA
Manganese	0.60		0.050	0.030	ug/L	1		1640	Total/NA

Client Sample ID: SRWB-3CP2-SW-40 — Lab Sample ID: 350-1559-8

Analyte	Result	Qualifier	RL	MDL	Unit	Dil Fac	D	Method	Prep Type
Arsenic	1.9		0.70	0.63	ug/L	1		1640	Total/NA
Chromium	0.79	J	1.0	0.11	ug/L	1		1640	Total/NA
Nickel	0.17	J	0.50	0.15	ug/L	1		1640	Total/NA
Barium	8.1		0.50	0.088	ug/L	1		1640	Total/NA
Manganese	0.47		0.050	0.030	ug/L	1		1640	Total/NA

Client Sample ID: SRWB-3CP2-SW-B — Lab Sample ID: 350-1559-9

Analyte	Result	Qualifier	RL	MDL	Unit	Dil Fac	D	Method	Prep Type
Mercury	0.32	J	0.50	0.20	ng/L	1		1631E	Total/NA
Arsenic	2.2		0.70	0.63	ug/L	1		1640	Total/NA
Chromium	0.78	J	1.0	0.11	ug/L	1		1640	Total/NA
Lead	0.031	J	0.050	0.023	ug/L	1		1640	Total/NA
Nickel	0.21	J	0.50	0.15	ug/L	1		1640	Total/NA
Barium	8.2		0.50	0.088	ug/L	1		1640	Total/NA
Iron	17		5.0	0.81	ug/L	1		1640	Total/NA
Manganese	1.9		0.050	0.030	ug/L	1		1640	Total/NA

Client Sample ID: SRWA-1B2X-A — Lab Sample ID: 350-1559-10

Analyte	Result	Qualifier	RL	MDL	Unit	Dil Fac	D	Method	Prep Type
Mercury	55		4.8	2.3	ng/g	50	☼	1631B	Total/NA
Arsenic	7.0		0.31	0.094	mg/Kg	1	☼	1638	Total/NA
Barium	17000	B	31	0.063	mg/Kg	1	☼	1638	Total/NA
Cadmium	0.12		0.031	0.0031	mg/Kg	1	☼	1638	Total/NA
Chromium	41		0.31	0.31	mg/Kg	1	☼	1638	Total/NA
Copper	13	B	0.16	0.019	mg/Kg	1	☼	1638	Total/NA
Iron	21000		31	6.3	mg/Kg	1	☼	1638	Total/NA
Manganese	680	B ^2	0.16	0.016	mg/Kg	1	☼	1638	Total/NA
Nickel	22	B	0.63	0.025	mg/Kg	1	☼	1638	Total/NA
Lead	21		0.13	0.013	mg/Kg	1	☼	1638	Total/NA
Zinc	43		3.1	1.6	mg/Kg	1	☼	1638	Total/NA

This Detection Summary does not include radiochemical test results.

Detection Summary

Client: Tetra Tech Inc
Project/Site: Gulf of Thailand - 2025

Job ID: 350-1559-1

Client Sample ID: SRWA-2B2X-A — Lab Sample ID: 350-1559-11

Analyte	Result	Qualifier	RL	MDL	Unit	Dil Fac	D	Method	Prep Type
Mercury	19		2.1	1.0	ng/g	20	☼	1631B	Total/NA
Arsenic	8.9		0.36	0.11	mg/Kg	1	☼	1638	Total/NA
Barium	880	B	36	0.072	mg/Kg	1	☼	1638	Total/NA
Cadmium	0.070		0.036	0.0036	mg/Kg	1	☼	1638	Total/NA
Chromium	45		0.36	0.36	mg/Kg	1	☼	1638	Total/NA
Copper	12	B	0.18	0.022	mg/Kg	1	☼	1638	Total/NA
Iron	25000		36	7.2	mg/Kg	1	☼	1638	Total/NA
Manganese	840	B ^2	0.18	0.018	mg/Kg	1	☼	1638	Total/NA
Nickel	23	B	0.72	0.029	mg/Kg	1	☼	1638	Total/NA
Lead	22		0.14	0.014	mg/Kg	1	☼	1638	Total/NA
Zinc	33		3.6	1.8	mg/Kg	1	☼	1638	Total/NA

Client Sample ID: SRWA-2B2X-A-FD — Lab Sample ID: 350-1559-12

Analyte	Result	Qualifier	RL	MDL	Unit	Dil Fac	D	Method	Prep Type
Mercury	24		2.0	0.99	ng/g	20	☼	1631B	Total/NA
Arsenic	8.7		0.35	0.10	mg/Kg	1	☼	1638	Total/NA
Barium	1100	B	35	0.069	mg/Kg	1	☼	1638	Total/NA
Cadmium	0.078		0.035	0.0035	mg/Kg	1	☼	1638	Total/NA
Chromium	45		0.35	0.35	mg/Kg	1	☼	1638	Total/NA
Copper	11	B	0.17	0.021	mg/Kg	1	☼	1638	Total/NA
Iron	23000		35	6.9	mg/Kg	1	☼	1638	Total/NA
Manganese	810	B ^2	0.17	0.017	mg/Kg	1	☼	1638	Total/NA
Nickel	24	B	0.69	0.028	mg/Kg	1	☼	1638	Total/NA
Lead	22		0.14	0.014	mg/Kg	1	☼	1638	Total/NA
Zinc	33		3.5	1.7	mg/Kg	1	☼	1638	Total/NA

Client Sample ID: SRWA-3B2X-A — Lab Sample ID: 350-1559-13

Analyte	Result	Qualifier	RL	MDL	Unit	Dil Fac	D	Method	Prep Type
Mercury	26		2.0	0.99	ng/g	20	☼	1631B	Total/NA
Arsenic	14		0.32	0.097	mg/Kg	1	☼	1638	Total/NA
Barium	4500	B	32	0.065	mg/Kg	1	☼	1638	Total/NA
Cadmium	0.15		0.032	0.0032	mg/Kg	1	☼	1638	Total/NA
Chromium	58		0.32	0.32	mg/Kg	1	☼	1638	Total/NA
Copper	16	B	0.16	0.019	mg/Kg	1	☼	1638	Total/NA
Iron	36000		32	6.5	mg/Kg	1	☼	1638	Total/NA
Manganese	1200	B ^2	0.16	0.016	mg/Kg	1	☼	1638	Total/NA
Nickel	32	B	0.65	0.026	mg/Kg	1	☼	1638	Total/NA
Lead	33	E	0.13	0.013	mg/Kg	1	☼	1638	Total/NA
Zinc	48		3.2	1.6	mg/Kg	1	☼	1638	Total/NA

Client Sample ID: SRWA-4B2X-A — Lab Sample ID: 350-1559-14

Analyte	Result	Qualifier	RL	MDL	Unit	Dil Fac	D	Method	Prep Type
Mercury	19		2.1	1.0	ng/g	20	☼	1631B	Total/NA
Arsenic	4.1		0.33	0.10	mg/Kg	1	☼	1638	Total/NA
Barium	550	B	33	0.067	mg/Kg	1	☼	1638	Total/NA
Cadmium	0.069		0.033	0.0033	mg/Kg	1	☼	1638	Total/NA
Chromium	35		0.33	0.33	mg/Kg	1	☼	1638	Total/NA
Copper	9.7	B	0.17	0.020	mg/Kg	1	☼	1638	Total/NA
Iron	14000		33	6.7	mg/Kg	1	☼	1638	Total/NA

This Detection Summary does not include radiochemical test results.

Detection Summary

Client: Tetra Tech Inc
Project/Site: Gulf of Thailand - 2025

Job ID: 350-1559-1

Client Sample ID: SRWA-4B2X-A (Continued) — Lab Sample ID: 350-1559-14

Analyte	Result	Qualifier	RL	MDL	Unit	Dil Fac	D	Method	Prep Type
Manganese	880	B ^2	0.17	0.017	mg/Kg	1	☼	1638	Total/NA
Nickel	19	B	0.67	0.027	mg/Kg	1	☼	1638	Total/NA
Lead	18		0.13	0.013	mg/Kg	1	☼	1638	Total/NA
Zinc	26		3.3	1.7	mg/Kg	1	☼	1638	Total/NA

Client Sample ID: SRWB-1B2-A — Lab Sample ID: 350-1559-15

Analyte	Result	Qualifier	RL	MDL	Unit	Dil Fac	D	Method	Prep Type
Mercury	96		5.2	2.5	ng/g	50	☼	1631B	Total/NA
Arsenic	6.2		0.34	0.10	mg/Kg	1	☼	1638	Total/NA
Barium	6000	B	34	0.067	mg/Kg	1	☼	1638	Total/NA
Cadmium	0.35	B	0.034	0.0034	mg/Kg	1	☼	1638	Total/NA
Chromium	43		0.34	0.34	mg/Kg	1	☼	1638	Total/NA
Copper	25	B	0.17	0.020	mg/Kg	1	☼	1638	Total/NA
Iron	18000	B	34	6.7	mg/Kg	1	☼	1638	Total/NA
Manganese	550	B ^2	0.17	0.017	mg/Kg	1	☼	1638	Total/NA
Nickel	23	B	0.67	0.027	mg/Kg	1	☼	1638	Total/NA
Lead	26	B	0.13	0.013	mg/Kg	1	☼	1638	Total/NA
Zinc	88		3.4	1.7	mg/Kg	1	☼	1638	Total/NA

Client Sample ID: SRWB-1CP2-A — Lab Sample ID: 350-1559-16

Analyte	Result	Qualifier	RL	MDL	Unit	Dil Fac	D	Method	Prep Type
Mercury	18		2.3	1.1	ng/g	20	☼	1631B	Total/NA
Arsenic	4.2		0.36	0.11	mg/Kg	1	☼	1638	Total/NA
Barium	260		36	0.072	mg/Kg	1	☼	1638	Total/NA
Cadmium	0.085	B	0.036	0.0036	mg/Kg	1	☼	1638	Total/NA
Chromium	50		0.36	0.36	mg/Kg	1	☼	1638	Total/NA
Copper	13	B	0.18	0.022	mg/Kg	1	☼	1638	Total/NA
Iron	17000	B	36	7.2	mg/Kg	1	☼	1638	Total/NA
Manganese	620	B ^2	0.18	0.018	mg/Kg	1	☼	1638	Total/NA
Nickel	26	B	0.72	0.029	mg/Kg	1	☼	1638	Total/NA
Lead	21	B	0.14	0.014	mg/Kg	1	☼	1638	Total/NA
Zinc	39		3.6	1.8	mg/Kg	1	☼	1638	Total/NA

Client Sample ID: SRWB-1D2-A — Lab Sample ID: 350-1559-17

Analyte	Result	Qualifier	RL	MDL	Unit	Dil Fac	D	Method	Prep Type
Mercury	29		5.5	2.7	ng/g	50	☼	1631B	Total/NA
Arsenic	4.4		0.39	0.12	mg/Kg	1	☼	1638	Total/NA
Barium	460	B	39	0.079	mg/Kg	1	☼	1638	Total/NA
Cadmium	0.083	B	0.039	0.0039	mg/Kg	1	☼	1638	Total/NA
Chromium	47		0.39	0.39	mg/Kg	1	☼	1638	Total/NA
Copper	12	B	0.20	0.024	mg/Kg	1	☼	1638	Total/NA
Iron	16000	B	39	7.9	mg/Kg	1	☼	1638	Total/NA
Manganese	700	B ^2	0.20	0.020	mg/Kg	1	☼	1638	Total/NA
Nickel	24	B	0.79	0.031	mg/Kg	1	☼	1638	Total/NA
Lead	20	B	0.16	0.016	mg/Kg	1	☼	1638	Total/NA
Zinc	37		3.9	2.0	mg/Kg	1	☼	1638	Total/NA

This Detection Summary does not include radiochemical test results.

Detection Summary

Client: Tetra Tech Inc
Project/Site: Gulf of Thailand - 2025

Job ID: 350-1559-1

Client Sample ID: SRWB-2B2X-A — Lab Sample ID: 350-1559-18

Analyte	Result	Qualifier	RL	MDL	Unit	Dil Fac	D	Method	Prep Type
Mercury	29		2.2	1.1	ng/g	20	☼	1631B	Total/NA
Arsenic	3.7		0.36	0.11	mg/Kg	1	☼	1638	Total/NA
Barium	1600	B	36	0.072	mg/Kg	1	☼	1638	Total/NA
Cadmium	0.11	B	0.036	0.0036	mg/Kg	1	☼	1638	Total/NA
Chromium	42		0.36	0.36	mg/Kg	1	☼	1638	Total/NA
Copper	12	B	0.18	0.021	mg/Kg	1	☼	1638	Total/NA
Iron	15000	B	36	7.2	mg/Kg	1	☼	1638	Total/NA
Manganese	500	B ^2	0.18	0.018	mg/Kg	1	☼	1638	Total/NA
Nickel	22	B	0.72	0.029	mg/Kg	1	☼	1638	Total/NA
Lead	19	B	0.14	0.014	mg/Kg	1	☼	1638	Total/NA
Zinc	41		3.6	1.8	mg/Kg	1	☼	1638	Total/NA

Client Sample ID: SRWB-2B2X-A-FD — Lab Sample ID: 350-1559-19

Analyte	Result	Qualifier	RL	MDL	Unit	Dil Fac	D	Method	Prep Type
Mercury	98		6.0	2.9	ng/g	50	☼	1631B	Total/NA
Arsenic	6.7		0.43	0.13	mg/Kg	1	☼	1638	Total/NA
Barium	5800	B	43	0.087	mg/Kg	1	☼	1638	Total/NA
Cadmium	0.25	B	0.043	0.0043	mg/Kg	1	☼	1638	Total/NA
Chromium	57		0.43	0.43	mg/Kg	1	☼	1638	Total/NA
Copper	17	B	0.22	0.026	mg/Kg	1	☼	1638	Total/NA
Iron	21000	B	43	8.7	mg/Kg	1	☼	1638	Total/NA
Manganese	690	B ^2	0.22	0.022	mg/Kg	1	☼	1638	Total/NA
Nickel	30	B	0.87	0.035	mg/Kg	1	☼	1638	Total/NA
Lead	29	B	0.17	0.017	mg/Kg	1	☼	1638	Total/NA
Zinc	83		4.3	2.2	mg/Kg	1	☼	1638	Total/NA

Client Sample ID: SRWB-3B2-A — Lab Sample ID: 350-1559-20

Analyte	Result	Qualifier	RL	MDL	Unit	Dil Fac	D	Method	Prep Type
Mercury	620		19	9.1	ng/g	200	☼	1631B	Total/NA
Arsenic	9.7		0.33	0.098	mg/Kg	1	☼	1638	Total/NA
Barium	24000	B	33	0.065	mg/Kg	1	☼	1638	Total/NA
Cadmium	1.4	B	0.033	0.0033	mg/Kg	1	☼	1638	Total/NA
Chromium	43		0.33	0.33	mg/Kg	1	☼	1638	Total/NA
Copper	22	B	0.16	0.020	mg/Kg	1	☼	1638	Total/NA
Iron	18000	B	33	6.5	mg/Kg	1	☼	1638	Total/NA
Manganese	540	B ^2	0.16	0.016	mg/Kg	1	☼	1638	Total/NA
Nickel	34	B	0.65	0.026	mg/Kg	1	☼	1638	Total/NA
Lead	48	E B	0.13	0.013	mg/Kg	1	☼	1638	Total/NA
Zinc	280		3.3	1.6	mg/Kg	1	☼	1638	Total/NA

Client Sample ID: SRWB-3CP2-A — Lab Sample ID: 350-1559-21

Analyte	Result	Qualifier	RL	MDL	Unit	Dil Fac	D	Method	Prep Type
Mercury	26		2.1	1.0	ng/g	20	☼	1631B	Total/NA
Arsenic	5.7		0.38	0.11	mg/Kg	1	☼	1638	Total/NA
Barium	670	F1 B	38	0.076	mg/Kg	1	☼	1638	Total/NA
Cadmium	0.087	B	0.038	0.0038	mg/Kg	1	☼	1638	Total/NA
Chromium	50		0.38	0.38	mg/Kg	1	☼	1638	Total/NA
Copper	14	B	0.19	0.023	mg/Kg	1	☼	1638	Total/NA
Iron	19000	B	38	7.6	mg/Kg	1	☼	1638	Total/NA

This Detection Summary does not include radiochemical test results.

Detection Summary

Client: Tetra Tech Inc
Project/Site: Gulf of Thailand - 2025

Job ID: 350-1559-1

Client Sample ID: SRWB-3CP2-A (Continued) — Lab Sample ID: 350-1559-21

Analyte	Result	Qualifier	RL	MDL	Unit	Dil Fac	D	Method	Prep Type
Manganese	670	F1 B ^2	0.19	0.019	mg/Kg	1	☼	1638	Total/NA
Nickel	27	B	0.76	0.031	mg/Kg	1	☼	1638	Total/NA
Lead	22	B	0.15	0.015	mg/Kg	1	☼	1638	Total/NA
Zinc	43		3.8	1.9	mg/Kg	1	☼	1638	Total/NA

Client Sample ID: SRWB-3D2-A — Lab Sample ID: 350-1559-22

Analyte	Result	Qualifier	RL	MDL	Unit	Dil Fac	D	Method	Prep Type
Mercury	22		2.1	1.0	ng/g	20	☼	1631B	Total/NA
Arsenic	5.0		0.37	0.11	mg/Kg	1	☼	1638	Total/NA
Barium	50000	B	370	0.74	mg/Kg	10	☼	1638	Total/NA
Cadmium	0.087	B	0.037	0.0037	mg/Kg	1	☼	1638	Total/NA
Chromium	47		0.37	0.37	mg/Kg	1	☼	1638	Total/NA
Copper	12	B	0.18	0.022	mg/Kg	1	☼	1638	Total/NA
Iron	16000	B	37	7.4	mg/Kg	1	☼	1638	Total/NA
Manganese	680	B ^2	0.18	0.018	mg/Kg	1	☼	1638	Total/NA
Nickel	25	B	0.74	0.029	mg/Kg	1	☼	1638	Total/NA
Lead	20	B	0.15	0.015	mg/Kg	1	☼	1638	Total/NA
Zinc	41		3.7	1.8	mg/Kg	1	☼	1638	Total/NA

Client Sample ID: SRWB-4B2-A — Lab Sample ID: 350-1559-23

Analyte	Result	Qualifier	RL	MDL	Unit	Dil Fac	D	Method	Prep Type
Mercury	25		2.2	1.0	ng/g	20	☼	1631B	Total/NA
Arsenic	6.6		0.38	0.11	mg/Kg	1	☼	1638	Total/NA
Barium	670	B	38	0.076	mg/Kg	1	☼	1638	Total/NA
Cadmium	0.094	B	0.038	0.0038	mg/Kg	1	☼	1638	Total/NA
Chromium	46		0.38	0.38	mg/Kg	1	☼	1638	Total/NA
Copper	12	B	0.19	0.023	mg/Kg	1	☼	1638	Total/NA
Iron	18000	B	38	7.6	mg/Kg	1	☼	1638	Total/NA
Manganese	660	B ^2	0.19	0.019	mg/Kg	1	☼	1638	Total/NA
Nickel	24	B	0.76	0.030	mg/Kg	1	☼	1638	Total/NA
Lead	22	B	0.15	0.015	mg/Kg	1	☼	1638	Total/NA
Zinc	39		3.8	1.9	mg/Kg	1	☼	1638	Total/NA

Client Sample ID: SRWB-WB — Lab Sample ID: 350-1559-146

Analyte	Result	Qualifier	RL	MDL	Unit	Dil Fac	D	Method	Prep Type
Copper	1.3		0.50	0.43	ug/L	1		1640	Total/NA
Lead	0.092		0.050	0.023	ug/L	1		1640	Total/NA
Manganese	0.13		0.050	0.030	ug/L	1		1640	Total/NA

Client Sample ID: SRWB-EQ — Lab Sample ID: 350-1559-147

Analyte	Result	Qualifier	RL	MDL	Unit	Dil Fac	D	Method	Prep Type
Zinc	0.40	J	1.0	0.31	ug/L	1		1640	Total/NA
Manganese	0.15		0.050	0.030	ug/L	1		1640	Total/NA

This Detection Summary does not include radiochemical test results.

Client Sample Results

Client: Tetra Tech Inc
Project/Site: Gulf of Thailand - 2025

Job ID: 350-1559-1

Client Sample ID: SRWB-1CP2-SW-1

Lab Sample ID: 350-1559-1
Date Collected: 02/09/25 01:06
Matrix: Water
Date Received: 02/19/25 15:15

Method: EPA 1631E - Mercury, Low Level (CVAFS)

Analyte	Result	Qualifier	RL	MDL	Unit	D	Prepared	Analyzed	Dil Fac
Mercury	0.23	J F1	0.50	0.20	ng/L			03/04/25 14:51	1

Method: EPA 1640 - Metals (ICPMS)

Analyte	Result	Qualifier	RL	MDL	Unit	D	Prepared	Analyzed	Dil Fac
Arsenic	1.9		0.70	0.63	ug/L		02/24/25 13:30	02/25/25 04:48	1
Cadmium	ND		0.020	0.013	ug/L		02/24/25 13:30	02/25/25 04:48	1
Chromium	0.71	J	1.0	0.11	ug/L		02/24/25 13:30	02/25/25 04:48	1
Copper	ND		0.50	0.43	ug/L		02/24/25 13:30	02/25/25 04:48	1
Lead	ND		0.050	0.023	ug/L		02/24/25 13:30	02/25/25 04:48	1
Nickel	0.20	J	0.50	0.15	ug/L		02/24/25 13:30	02/25/25 04:48	1
Zinc	ND		1.0	0.31	ug/L		02/24/25 13:30	02/25/25 04:48	1
Barium	7.3		0.50	0.088	ug/L		02/24/25 13:30	02/25/25 04:48	1
Iron	1.1	J	5.0	0.81	ug/L		02/24/25 13:30	02/25/25 04:48	1
Manganese	0.59		0.050	0.030	ug/L		02/24/25 13:30	02/25/25 04:48	1

Client Sample ID: SRWB-1CP2-SW-20

Lab Sample ID: 350-1559-2
Date Collected: 02/09/25 01:12
Matrix: Water
Date Received: 02/19/25 15:15

Method: EPA 1631E - Mercury, Low Level (CVAFS)

Analyte	Result	Qualifier	RL	MDL	Unit	D	Prepared	Analyzed	Dil Fac
Mercury	0.20	J	0.50	0.20	ng/L			03/10/25 21:20	1

Method: EPA 1640 - Metals (ICPMS)

Analyte	Result	Qualifier	RL	MDL	Unit	D	Prepared	Analyzed	Dil Fac
Arsenic	2.0	F1	0.70	0.63	ug/L		02/24/25 13:30	02/25/25 05:58	1
Cadmium	ND		0.020	0.013	ug/L		02/24/25 13:30	02/25/25 05:58	1
Chromium	0.79	J	1.0	0.11	ug/L		02/24/25 13:30	02/25/25 05:58	1
Copper	0.43	J	0.50	0.43	ug/L		02/24/25 13:30	02/25/25 05:58	1
Lead	ND		0.050	0.023	ug/L		02/24/25 13:30	02/25/25 05:58	1
Nickel	0.22	J	0.50	0.15	ug/L		02/24/25 13:30	02/25/25 05:58	1
Zinc	ND		1.0	0.31	ug/L		02/24/25 13:30	02/25/25 05:58	1
Barium	7.1		0.50	0.088	ug/L		02/24/25 13:30	02/25/25 05:58	1
Iron	0.98	J	5.0	0.81	ug/L		02/24/25 13:30	02/25/25 05:58	1
Manganese	0.54		0.050	0.030	ug/L		02/24/25 13:30	02/25/25 05:58	1

Client Sample ID: SRWB-1CP2-SW-40

Lab Sample ID: 350-1559-3
Date Collected: 02/09/25 01:20
Matrix: Water
Date Received: 02/19/25 15:15

Method: EPA 1631E - Mercury, Low Level (CVAFS)

Analyte	Result	Qualifier	RL	MDL	Unit	D	Prepared	Analyzed	Dil Fac
Mercury	ND		0.50	0.20	ng/L			03/10/25 21:24	1

Method: EPA 1640 - Metals (ICPMS)

Analyte	Result	Qualifier	RL	MDL	Unit	D	Prepared	Analyzed	Dil Fac
Arsenic	2.1		0.70	0.63	ug/L		02/24/25 13:30	02/25/25 13:00	1
Cadmium	ND		0.020	0.013	ug/L		02/24/25 13:30	02/25/25 13:00	1
Chromium	0.78	J	1.0	0.11	ug/L		02/24/25 13:30	02/25/25 13:00	1
Copper	ND		0.50	0.43	ug/L		02/24/25 13:30	02/25/25 13:00	1
Lead	ND		0.050	0.023	ug/L		02/24/25 13:30	02/25/25 13:00	1

Client Sample Results

Client: Tetra Tech Inc
Project/Site: Gulf of Thailand - 2025

Job ID: 350-1559-1

Client Sample ID: SRWB-1CP2-SW-40

Lab Sample ID: 350-1559-3
Matrix: Water

Date Collected: 02/09/25 01:20
Date Received: 02/19/25 15:15

Method: EPA 1640 - Metals (ICPMS) (Continued)

Analyte	Result	Qualifier	RL	MDL	Unit	D	Prepared	Analyzed	Dil Fac
Nickel	0.19	J	0.50	0.15	ug/L		02/24/25 13:30	02/25/25 13:00	1
Zinc	ND		1.0	0.31	ug/L		02/24/25 13:30	02/25/25 13:00	1
Barium	7.7		0.50	0.088	ug/L		02/24/25 13:30	02/25/25 13:00	1
Iron	ND		5.0	0.81	ug/L		02/24/25 13:30	02/25/25 13:00	1
Manganese	0.47		0.050	0.030	ug/L		02/24/25 13:30	02/25/25 13:00	1

Client Sample ID: SRWB-1CP2-SW-40-FD

Lab Sample ID: 350-1559-4
Matrix: Water

Date Collected: 02/09/25 01:30
Date Received: 02/19/25 15:15

Method: EPA 1631E - Mercury, Low Level (CVAFS)

Analyte	Result	Qualifier	RL	MDL	Unit	D	Prepared	Analyzed	Dil Fac
Mercury	ND		0.50	0.20	ng/L			03/10/25 21:28	1

Method: EPA 1640 - Metals (ICPMS)

Analyte	Result	Qualifier	RL	MDL	Unit	D	Prepared	Analyzed	Dil Fac
Arsenic	1.8		0.70	0.63	ug/L		02/24/25 13:30	02/25/25 13:14	1
Cadmium	ND		0.020	0.013	ug/L		02/24/25 13:30	02/25/25 13:14	1
Chromium	0.68	J	1.0	0.11	ug/L		02/24/25 13:30	02/25/25 13:14	1
Copper	ND		0.50	0.43	ug/L		02/24/25 13:30	02/25/25 13:14	1
Lead	ND		0.050	0.023	ug/L		02/24/25 13:30	02/25/25 13:14	1
Nickel	0.20	J	0.50	0.15	ug/L		02/24/25 13:30	02/25/25 13:14	1
Zinc	ND		1.0	0.31	ug/L		02/24/25 13:30	02/25/25 13:14	1
Barium	7.0		0.50	0.088	ug/L		02/24/25 13:30	02/25/25 13:14	1
Iron	ND		5.0	0.81	ug/L		02/24/25 13:30	02/25/25 13:14	1
Manganese	0.45		0.050	0.030	ug/L		02/24/25 13:30	02/25/25 13:14	1

Client Sample ID: SRWB-1CP2-SW-B

Lab Sample ID: 350-1559-5
Matrix: Water

Date Collected: 02/09/25 01:41
Date Received: 02/19/25 15:15

Method: EPA 1631E - Mercury, Low Level (CVAFS)

Analyte	Result	Qualifier	RL	MDL	Unit	D	Prepared	Analyzed	Dil Fac
Mercury	0.26	J	0.50	0.20	ng/L			03/10/25 21:32	1

Method: EPA 1640 - Metals (ICPMS)

Analyte	Result	Qualifier	RL	MDL	Unit	D	Prepared	Analyzed	Dil Fac
Arsenic	2.2		0.70	0.63	ug/L		02/24/25 13:30	02/25/25 13:57	1
Cadmium	ND		0.020	0.013	ug/L		02/24/25 13:30	02/25/25 13:57	1
Chromium	0.80	J	1.0	0.11	ug/L		02/24/25 13:30	02/25/25 13:57	1
Copper	ND		0.50	0.43	ug/L		02/24/25 13:30	02/25/25 13:57	1
Lead	0.035	J	0.050	0.023	ug/L		02/24/25 13:30	02/25/25 13:57	1
Nickel	0.21	J	0.50	0.15	ug/L		02/24/25 13:30	02/25/25 13:57	1
Zinc	0.39	J	1.0	0.31	ug/L		02/24/25 13:30	02/25/25 13:57	1
Barium	8.0		0.50	0.088	ug/L		02/24/25 13:30	02/25/25 13:57	1
Iron	24		5.0	0.81	ug/L		02/24/25 13:30	02/25/25 13:57	1
Manganese	2.0		0.050	0.030	ug/L		02/24/25 13:30	02/25/25 13:57	1

Client Sample Results

Client: Tetra Tech Inc
Project/Site: Gulf of Thailand - 2025

Job ID: 350-1559-1

Client Sample ID: SRWB-3CP2-SW-1

Lab Sample ID: 350-1559-6
Date Collected: 02/09/25 02:40
Matrix: Water
Date Received: 02/19/25 15:15

Method: EPA 1631E - Mercury, Low Level (CVAFS)

Analyte	Result	Qualifier	RL	MDL	Unit	D	Prepared	Analyzed	Dil Fac
Mercury	0.37	J	0.50	0.20	ng/L			03/10/25 21:36	1

Method: EPA 1640 - Metals (ICPMS)

Analyte	Result	Qualifier	RL	MDL	Unit	D	Prepared	Analyzed	Dil Fac
Arsenic	1.9		0.70	0.63	ug/L		02/24/25 13:30	02/25/25 14:11	1
Cadmium	ND		0.020	0.013	ug/L		02/24/25 13:30	02/25/25 14:11	1
Chromium	0.70	J	1.0	0.11	ug/L		02/24/25 13:30	02/25/25 14:11	1
Copper	ND		0.50	0.43	ug/L		02/24/25 13:30	02/25/25 14:11	1
Lead	ND		0.050	0.023	ug/L		02/24/25 13:30	02/25/25 14:11	1
Nickel	0.19	J	0.50	0.15	ug/L		02/24/25 13:30	02/25/25 14:11	1
Zinc	ND		1.0	0.31	ug/L		02/24/25 13:30	02/25/25 14:11	1
Barium	8.3		0.50	0.088	ug/L		02/24/25 13:30	02/25/25 14:11	1
Iron	ND		5.0	0.81	ug/L		02/24/25 13:30	02/25/25 14:11	1
Manganese	0.58		0.050	0.030	ug/L		02/24/25 13:30	02/25/25 14:11	1

Client Sample ID: SRWB-3CP2-SW-20

Lab Sample ID: 350-1559-7
Date Collected: 02/09/25 02:46
Matrix: Water
Date Received: 02/19/25 15:15

Method: EPA 1631E - Mercury, Low Level (CVAFS)

Analyte	Result	Qualifier	RL	MDL	Unit	D	Prepared	Analyzed	Dil Fac
Mercury	0.21	J	0.50	0.20	ng/L			03/04/25 15:07	1

Method: EPA 1640 - Metals (ICPMS)

Analyte	Result	Qualifier	RL	MDL	Unit	D	Prepared	Analyzed	Dil Fac
Arsenic	2.2		0.70	0.63	ug/L		02/24/25 13:30	02/25/25 14:25	1
Cadmium	ND		0.020	0.013	ug/L		02/24/25 13:30	02/25/25 14:25	1
Chromium	0.97	J	1.0	0.11	ug/L		02/24/25 13:30	02/25/25 14:25	1
Copper	ND		0.50	0.43	ug/L		02/24/25 13:30	02/25/25 14:25	1
Lead	ND		0.050	0.023	ug/L		02/24/25 13:30	02/25/25 14:25	1
Nickel	0.20	J	0.50	0.15	ug/L		02/24/25 13:30	02/25/25 14:25	1
Zinc	ND		1.0	0.31	ug/L		02/24/25 13:30	02/25/25 14:25	1
Barium	8.0		0.50	0.088	ug/L		02/24/25 13:30	02/25/25 14:25	1
Iron	3.8	J	5.0	0.81	ug/L		02/24/25 13:30	02/25/25 14:25	1
Manganese	0.60		0.050	0.030	ug/L		02/24/25 13:30	02/25/25 14:25	1

Client Sample ID: SRWB-3CP2-SW-40

Lab Sample ID: 350-1559-8
Date Collected: 02/09/25 02:54
Matrix: Water
Date Received: 02/19/25 15:15

Method: EPA 1631E - Mercury, Low Level (CVAFS)

Analyte	Result	Qualifier	RL	MDL	Unit	D	Prepared	Analyzed	Dil Fac
Mercury	ND	F1	0.50	0.20	ng/L			03/04/25 14:55	1

Method: EPA 1640 - Metals (ICPMS)

Analyte	Result	Qualifier	RL	MDL	Unit	D	Prepared	Analyzed	Dil Fac
Arsenic	1.9		0.70	0.63	ug/L		02/24/25 13:30	02/25/25 14:39	1
Cadmium	ND		0.020	0.013	ug/L		02/24/25 13:30	02/25/25 14:39	1
Chromium	0.79	J	1.0	0.11	ug/L		02/24/25 13:30	02/25/25 14:39	1
Copper	ND		0.50	0.43	ug/L		02/24/25 13:30	02/25/25 14:39	1
Lead	ND		0.050	0.023	ug/L		02/24/25 13:30	02/25/25 14:39	1

Client Sample Results

Client: Tetra Tech Inc
Project/Site: Gulf of Thailand - 2025

Job ID: 350-1559-1

Client Sample ID: SRWB-3CP2-SW-40

Lab Sample ID: 350-1559-8
Date Collected: 02/09/25 02:54
Matrix: Water
Date Received: 02/19/25 15:15

Method: EPA 1640 - Metals (ICPMS) (Continued)

Analyte	Result	Qualifier	RL	MDL	Unit	D	Prepared	Analyzed	Dil Fac
Nickel	0.17	J	0.50	0.15	ug/L		02/24/25 13:30	02/25/25 14:39	1
Zinc	ND		1.0	0.31	ug/L		02/24/25 13:30	02/25/25 14:39	1
Barium	8.1		0.50	0.088	ug/L		02/24/25 13:30	02/25/25 14:39	1
Iron	ND		5.0	0.81	ug/L		02/24/25 13:30	02/25/25 14:39	1
Manganese	0.47		0.050	0.030	ug/L		02/24/25 13:30	02/25/25 14:39	1

Client Sample ID: SRWB-3CP2-SW-B

Lab Sample ID: 350-1559-9
Date Collected: 02/09/25 03:06
Matrix: Water
Date Received: 02/19/25 15:15

Method: EPA 1631E - Mercury, Low Level (CVAFS)

Analyte	Result	Qualifier	RL	MDL	Unit	D	Prepared	Analyzed	Dil Fac
Mercury	0.32	J	0.50	0.20	ng/L			03/10/25 21:40	1

Method: EPA 1640 - Metals (ICPMS)

Analyte	Result	Qualifier	RL	MDL	Unit	D	Prepared	Analyzed	Dil Fac
Arsenic	2.2		0.70	0.63	ug/L		02/24/25 13:30	02/25/25 14:53	1
Cadmium	ND		0.020	0.013	ug/L		02/24/25 13:30	02/25/25 14:53	1
Chromium	0.78	J	1.0	0.11	ug/L		02/24/25 13:30	02/25/25 14:53	1
Copper	ND		0.50	0.43	ug/L		02/24/25 13:30	02/25/25 14:53	1
Lead	0.031	J	0.050	0.023	ug/L		02/24/25 13:30	02/25/25 14:53	1
Nickel	0.21	J	0.50	0.15	ug/L		02/24/25 13:30	02/25/25 14:53	1
Zinc	ND		1.0	0.31	ug/L		02/24/25 13:30	02/25/25 14:53	1
Barium	8.2		0.50	0.088	ug/L		02/24/25 13:30	02/25/25 14:53	1
Iron	17		5.0	0.81	ug/L		02/24/25 13:30	02/25/25 14:53	1
Manganese	1.9		0.050	0.030	ug/L		02/24/25 13:30	02/25/25 14:53	1

Client Sample ID: SRWA-1B2X-A

Lab Sample ID: 350-1559-10
Date Collected: 02/08/25 19:36
Matrix: Solid
Date Received: 02/19/25 15:15
Percent Solids: 58.2

Method: EPA 1631B - Mercury, Low Level (CVAFS)

Analyte	Result	Qualifier	RL	MDL	Unit	D	Prepared	Analyzed	Dil Fac
Mercury	55		4.8	2.3	ng/g	☼	03/03/25 17:34	03/19/25 10:28	50

Method: EPA 1638 - Metals (ICP/MS)

Analyte	Result	Qualifier	RL	MDL	Unit	D	Prepared	Analyzed	Dil Fac
Arsenic	7.0		0.31	0.094	mg/Kg	☼	02/25/25 18:24	03/03/25 15:48	1
Barium	17000	B	31	0.063	mg/Kg	☼	02/25/25 18:24	03/03/25 15:48	1
Cadmium	0.12		0.031	0.0031	mg/Kg	☼	02/25/25 18:24	03/03/25 15:48	1
Chromium	41		0.31	0.31	mg/Kg	☼	02/25/25 18:24	03/03/25 15:48	1
Copper	13	B	0.16	0.019	mg/Kg	☼	02/25/25 18:24	03/03/25 15:48	1
Iron	21000		31	6.3	mg/Kg	☼	02/25/25 18:24	03/03/25 15:48	1
Manganese	680	B ^2	0.16	0.016	mg/Kg	☼	02/25/25 18:24	03/03/25 15:48	1
Nickel	22	B	0.63	0.025	mg/Kg	☼	02/25/25 18:24	03/03/25 15:48	1
Lead	21		0.13	0.013	mg/Kg	☼	02/25/25 18:24	03/03/25 15:48	1
Zinc	43		3.1	1.6	mg/Kg	☼	02/25/25 18:24	03/03/25 15:48	1

Client Sample Results

Client: Tetra Tech Inc
Project/Site: Gulf of Thailand - 2025

Job ID: 350-1559-1

Client Sample ID: SRWA-2B2X-A

Lab Sample ID: 350-1559-11
Date Collected: 02/08/25 20:18
Matrix: Solid
Date Received: 02/19/25 15:15
Percent Solids: 52.8

Method: EPA 1631B - Mercury, Low Level (CVAFS)

Analyte	Result	Qualifier	RL	MDL	Unit	D	Prepared	Analyzed	Dil Fac
Mercury	19		2.1	1.0	ng/g	☼	03/03/25 17:34	03/19/25 15:49	20

Method: EPA 1638 - Metals (ICP/MS)

Analyte	Result	Qualifier	RL	MDL	Unit	D	Prepared	Analyzed	Dil Fac
Arsenic	8.9		0.36	0.11	mg/Kg	☼	02/25/25 18:24	03/03/25 15:50	1
Barium	880	B	36	0.072	mg/Kg	☼	02/25/25 18:24	03/03/25 15:50	1
Cadmium	0.070		0.036	0.0036	mg/Kg	☼	02/25/25 18:24	03/03/25 15:50	1
Chromium	45		0.36	0.36	mg/Kg	☼	02/25/25 18:24	03/03/25 15:50	1
Copper	12	B	0.18	0.022	mg/Kg	☼	02/25/25 18:24	03/03/25 15:50	1
Iron	25000		36	7.2	mg/Kg	☼	02/25/25 18:24	03/03/25 15:50	1
Manganese	840	B ^2	0.18	0.018	mg/Kg	☼	02/25/25 18:24	03/03/25 15:50	1
Nickel	23	B	0.72	0.029	mg/Kg	☼	02/25/25 18:24	03/03/25 15:50	1
Lead	22		0.14	0.014	mg/Kg	☼	02/25/25 18:24	03/03/25 15:50	1
Zinc	33		3.6	1.8	mg/Kg	☼	02/25/25 18:24	03/03/25 15:50	1

Client Sample ID: SRWA-2B2X-A-FD

Lab Sample ID: 350-1559-12
Date Collected: 02/08/25 20:25
Matrix: Solid
Date Received: 02/19/25 15:15
Percent Solids: 54.2

Method: EPA 1631B - Mercury, Low Level (CVAFS)

Analyte	Result	Qualifier	RL	MDL	Unit	D	Prepared	Analyzed	Dil Fac
Mercury	24		2.0	0.99	ng/g	☼	03/03/25 17:34	03/19/25 15:53	20

Method: EPA 1638 - Metals (ICP/MS)

Analyte	Result	Qualifier	RL	MDL	Unit	D	Prepared	Analyzed	Dil Fac
Arsenic	8.7		0.35	0.10	mg/Kg	☼	02/25/25 18:24	03/03/25 15:52	1
Barium	1100	B	35	0.069	mg/Kg	☼	02/25/25 18:24	03/03/25 15:52	1
Cadmium	0.078		0.035	0.0035	mg/Kg	☼	02/25/25 18:24	03/03/25 15:52	1
Chromium	45		0.35	0.35	mg/Kg	☼	02/25/25 18:24	03/03/25 15:52	1
Copper	11	B	0.17	0.021	mg/Kg	☼	02/25/25 18:24	03/03/25 15:52	1
Iron	23000		35	6.9	mg/Kg	☼	02/25/25 18:24	03/03/25 15:52	1
Manganese	810	B ^2	0.17	0.017	mg/Kg	☼	02/25/25 18:24	03/03/25 15:52	1
Nickel	24	B	0.69	0.028	mg/Kg	☼	02/25/25 18:24	03/03/25 15:52	1
Lead	22		0.14	0.014	mg/Kg	☼	02/25/25 18:24	03/03/25 15:52	1
Zinc	33		3.5	1.7	mg/Kg	☼	02/25/25 18:24	03/03/25 15:52	1

Client Sample ID: SRWA-3B2X-A

Lab Sample ID: 350-1559-13
Date Collected: 02/08/25 20:50
Matrix: Solid
Date Received: 02/19/25 15:15
Percent Solids: 55.9

Method: EPA 1631B - Mercury, Low Level (CVAFS)

Analyte	Result	Qualifier	RL	MDL	Unit	D	Prepared	Analyzed	Dil Fac
Mercury	26		2.0	0.99	ng/g	☼	03/03/25 17:34	03/19/25 15:57	20

Method: EPA 1638 - Metals (ICP/MS)

Analyte	Result	Qualifier	RL	MDL	Unit	D	Prepared	Analyzed	Dil Fac
Arsenic	14		0.32	0.097	mg/Kg	☼	02/25/25 18:24	03/03/25 15:54	1
Barium	4500	B	32	0.065	mg/Kg	☼	02/25/25 18:24	03/03/25 15:54	1
Cadmium	0.15		0.032	0.0032	mg/Kg	☼	02/25/25 18:24	03/03/25 15:54	1
Chromium	58		0.32	0.32	mg/Kg	☼	02/25/25 18:24	03/03/25 15:54	1
Copper	16	B	0.16	0.019	mg/Kg	☼	02/25/25 18:24	03/03/25 15:54	1

Client Sample Results

Client: Tetra Tech Inc
Project/Site: Gulf of Thailand - 2025

Job ID: 350-1559-1

Client Sample ID: SRWA-3B2X-A

Lab Sample ID: 350-1559-13
Date Collected: 02/08/25 20:50
Matrix: Solid
Date Received: 02/19/25 15:15
Percent Solids: 55.9

Method: EPA 1638 - Metals (ICP/MS) (Continued)

Analyte	Result	Qualifier	RL	MDL	Unit	D	Prepared	Analyzed	Dil Fac
Iron	36000		32	6.5	mg/Kg	☼	02/25/25 18:24	03/03/25 15:54	1
Manganese	1200	B ^2	0.16	0.016	mg/Kg	☼	02/25/25 18:24	03/03/25 15:54	1
Nickel	32	B	0.65	0.026	mg/Kg	☼	02/25/25 18:24	03/03/25 15:54	1
Lead	33	E	0.13	0.013	mg/Kg	☼	02/25/25 18:24	03/03/25 15:54	1
Zinc	48		3.2	1.6	mg/Kg	☼	02/25/25 18:24	03/03/25 15:54	1

Client Sample ID: SRWA-4B2X-A

Lab Sample ID: 350-1559-14
Date Collected: 02/08/25 21:21
Matrix: Solid
Date Received: 02/19/25 15:15
Percent Solids: 53.8

Method: EPA 1631B - Mercury, Low Level (CVAFS)

Analyte	Result	Qualifier	RL	MDL	Unit	D	Prepared	Analyzed	Dil Fac
Mercury	19		2.1	1.0	ng/g	☼	03/03/25 17:34	03/19/25 16:01	20

Method: EPA 1638 - Metals (ICP/MS)

Analyte	Result	Qualifier	RL	MDL	Unit	D	Prepared	Analyzed	Dil Fac
Arsenic	4.1		0.33	0.10	mg/Kg	☼	02/25/25 18:24	03/03/25 15:56	1
Barium	550	B	33	0.067	mg/Kg	☼	02/25/25 18:24	03/03/25 15:56	1
Cadmium	0.069		0.033	0.0033	mg/Kg	☼	02/25/25 18:24	03/03/25 15:56	1
Chromium	35		0.33	0.33	mg/Kg	☼	02/25/25 18:24	03/03/25 15:56	1
Copper	9.7	B	0.17	0.020	mg/Kg	☼	02/25/25 18:24	03/03/25 15:56	1
Iron	14000		33	6.7	mg/Kg	☼	02/25/25 18:24	03/03/25 15:56	1
Manganese	880	B ^2	0.17	0.017	mg/Kg	☼	02/25/25 18:24	03/03/25 15:56	1
Nickel	19	B	0.67	0.027	mg/Kg	☼	02/25/25 18:24	03/03/25 15:56	1
Lead	18		0.13	0.013	mg/Kg	☼	02/25/25 18:24	03/03/25 15:56	1
Zinc	26		3.3	1.7	mg/Kg	☼	02/25/25 18:24	03/03/25 15:56	1

Client Sample ID: SRWB-1B2-A

Lab Sample ID: 350-1559-15
Date Collected: 02/09/25 17:30
Matrix: Solid
Date Received: 02/19/25 15:15
Percent Solids: 53.5

Method: EPA 1631B - Mercury, Low Level (CVAFS)

Analyte	Result	Qualifier	RL	MDL	Unit	D	Prepared	Analyzed	Dil Fac
Mercury	96		5.2	2.5	ng/g	☼	03/03/25 17:34	03/19/25 11:26	50

Method: EPA 1638 - Metals (ICP/MS)

Analyte	Result	Qualifier	RL	MDL	Unit	D	Prepared	Analyzed	Dil Fac
Arsenic	6.2		0.34	0.10	mg/Kg	☼	02/26/25 16:22	04/17/25 21:46	1
Barium	6000	B	34	0.067	mg/Kg	☼	02/26/25 16:22	04/17/25 21:46	1
Cadmium	0.35	B	0.034	0.0034	mg/Kg	☼	02/26/25 16:22	04/17/25 21:46	1
Chromium	43		0.34	0.34	mg/Kg	☼	02/26/25 16:22	04/17/25 21:46	1
Copper	25	B	0.17	0.020	mg/Kg	☼	02/26/25 16:22	04/17/25 21:46	1
Iron	18000	B	34	6.7	mg/Kg	☼	02/26/25 16:22	04/17/25 21:46	1
Manganese	550	B ^2	0.17	0.017	mg/Kg	☼	02/26/25 16:22	04/17/25 21:46	1
Nickel	23	B	0.67	0.027	mg/Kg	☼	02/26/25 16:22	04/17/25 21:46	1
Lead	26	B	0.13	0.013	mg/Kg	☼	02/26/25 16:22	04/17/25 21:46	1
Zinc	88		3.4	1.7	mg/Kg	☼	02/26/25 16:22	04/17/25 21:46	1

Client Sample Results

Client: Tetra Tech Inc
Project/Site: Gulf of Thailand - 2025

Job ID: 350-1559-1

Client Sample ID: SRWB-1CP2-A

Lab Sample ID: 350-1559-16
Date Collected: 02/09/25 16:56
Matrix: Solid
Date Received: 02/19/25 15:15
Percent Solids: 50.3

Method: EPA 1631B - Mercury, Low Level (CVAFS)

Analyte	Result	Qualifier	RL	MDL	Unit	D	Prepared	Analyzed	Dil Fac
Mercury	18		2.3	1.1	ng/g	☼	03/03/25 17:34	03/19/25 16:22	20

Method: EPA 1638 - Metals (ICP/MS)

Analyte	Result	Qualifier	RL	MDL	Unit	D	Prepared	Analyzed	Dil Fac
Arsenic	4.2		0.36	0.11	mg/Kg	☼	02/26/25 16:22	04/17/25 21:49	1
Barium	260		36	0.072	mg/Kg	☼	02/26/25 16:22	04/17/25 21:49	1
Cadmium	0.085	B	0.036	0.0036	mg/Kg	☼	02/26/25 16:22	04/17/25 21:49	1
Chromium	50		0.36	0.36	mg/Kg	☼	02/26/25 16:22	04/17/25 21:49	1
Copper	13	B	0.18	0.022	mg/Kg	☼	02/26/25 16:22	04/17/25 21:49	1
Iron	17000	B	36	7.2	mg/Kg	☼	02/26/25 16:22	04/17/25 21:49	1
Manganese	620	B ^2	0.18	0.018	mg/Kg	☼	02/26/25 16:22	04/17/25 21:49	1
Nickel	26	B	0.72	0.029	mg/Kg	☼	02/26/25 16:22	04/17/25 21:49	1
Lead	21	B	0.14	0.014	mg/Kg	☼	02/26/25 16:22	04/17/25 21:49	1
Zinc	39		3.6	1.8	mg/Kg	☼	02/26/25 16:22	04/17/25 21:49	1

Client Sample ID: SRWB-1D2-A

Lab Sample ID: 350-1559-17
Date Collected: 02/09/25 16:08
Matrix: Solid
Date Received: 02/19/25 15:15
Percent Solids: 49.1

Method: EPA 1631B - Mercury, Low Level (CVAFS)

Analyte	Result	Qualifier	RL	MDL	Unit	D	Prepared	Analyzed	Dil Fac
Mercury	29		5.5	2.7	ng/g	☼	03/03/25 17:34	03/19/25 10:48	50

Method: EPA 1638 - Metals (ICP/MS)

Analyte	Result	Qualifier	RL	MDL	Unit	D	Prepared	Analyzed	Dil Fac
Arsenic	4.4		0.39	0.12	mg/Kg	☼	02/26/25 16:22	04/17/25 21:51	1
Barium	460	B	39	0.079	mg/Kg	☼	02/26/25 16:22	04/17/25 21:51	1
Cadmium	0.083	B	0.039	0.0039	mg/Kg	☼	02/26/25 16:22	04/17/25 21:51	1
Chromium	47		0.39	0.39	mg/Kg	☼	02/26/25 16:22	04/17/25 21:51	1
Copper	12	B	0.20	0.024	mg/Kg	☼	02/26/25 16:22	04/17/25 21:51	1
Iron	16000	B	39	7.9	mg/Kg	☼	02/26/25 16:22	04/17/25 21:51	1
Manganese	700	B ^2	0.20	0.020	mg/Kg	☼	02/26/25 16:22	04/17/25 21:51	1
Nickel	24	B	0.79	0.031	mg/Kg	☼	02/26/25 16:22	04/17/25 21:51	1
Lead	20	B	0.16	0.016	mg/Kg	☼	02/26/25 16:22	04/17/25 21:51	1
Zinc	37		3.9	2.0	mg/Kg	☼	02/26/25 16:22	04/17/25 21:51	1

Client Sample ID: SRWB-2B2X-A

Lab Sample ID: 350-1559-18
Date Collected: 02/09/25 18:03
Matrix: Solid
Date Received: 02/19/25 15:15
Percent Solids: 50.1

Method: EPA 1631B - Mercury, Low Level (CVAFS)

Analyte	Result	Qualifier	RL	MDL	Unit	D	Prepared	Analyzed	Dil Fac
Mercury	29		2.2	1.1	ng/g	☼	03/03/25 17:34	03/19/25 16:26	20

Method: EPA 1638 - Metals (ICP/MS)

Analyte	Result	Qualifier	RL	MDL	Unit	D	Prepared	Analyzed	Dil Fac
Arsenic	3.7		0.36	0.11	mg/Kg	☼	02/26/25 16:22	04/17/25 21:54	1
Barium	1600	B	36	0.072	mg/Kg	☼	02/26/25 16:22	04/17/25 21:54	1
Cadmium	0.11	B	0.036	0.0036	mg/Kg	☼	02/26/25 16:22	04/17/25 21:54	1
Chromium	42		0.36	0.36	mg/Kg	☼	02/26/25 16:22	04/17/25 21:54	1
Copper	12	B	0.18	0.021	mg/Kg	☼	02/26/25 16:22	04/17/25 21:54	1

Client Sample ID: SRWB-2B2X-A

Lab Sample ID: 350-1559-18
Date Collected: 02/09/25 18:03
Matrix: Solid
Date Received: 02/19/25 15:15
Percent Solids: 50.1

Method: EPA 1638 - Metals (ICP/MS) (Continued)

Analyte	Result	Qualifier	RL	MDL	Unit	D	Prepared	Analyzed	Dil Fac
Iron	15000	B	36	7.2	mg/Kg	☼	02/26/25 16:22	04/17/25 21:54	1
Manganese	500	B ^2	0.18	0.018	mg/Kg	☼	02/26/25 16:22	04/17/25 21:54	1
Nickel	22	B	0.72	0.029	mg/Kg	☼	02/26/25 16:22	04/17/25 21:54	1
Lead	19	B	0.14	0.014	mg/Kg	☼	02/26/25 16:22	04/17/25 21:54	1
Zinc	41		3.6	1.8	mg/Kg	☼	02/26/25 16:22	04/17/25 21:54	1

Client Sample ID: SRWB-2B2X-A-FD

Lab Sample ID: 350-1559-19
Date Collected: 02/09/25 18:11
Matrix: Solid
Date Received: 02/19/25 15:15
Percent Solids: 44.5

Method: EPA 1631B - Mercury, Low Level (CVAFS)

Analyte	Result	Qualifier	RL	MDL	Unit	D	Prepared	Analyzed	Dil Fac
Mercury	98		6.0	2.9	ng/g	☼	03/03/25 17:34	03/19/25 11:38	50

Method: EPA 1638 - Metals (ICP/MS)

Analyte	Result	Qualifier	RL	MDL	Unit	D	Prepared	Analyzed	Dil Fac
Arsenic	6.7		0.43	0.13	mg/Kg	☼	02/26/25 16:22	04/17/25 21:56	1
Barium	5800	B	43	0.087	mg/Kg	☼	02/26/25 16:22	04/17/25 21:56	1
Cadmium	0.25	B	0.043	0.0043	mg/Kg	☼	02/26/25 16:22	04/17/25 21:56	1
Chromium	57		0.43	0.43	mg/Kg	☼	02/26/25 16:22	04/17/25 21:56	1
Copper	17	B	0.22	0.026	mg/Kg	☼	02/26/25 16:22	04/17/25 21:56	1
Iron	21000	B	43	8.7	mg/Kg	☼	02/26/25 16:22	04/17/25 21:56	1
Manganese	690	B ^2	0.22	0.022	mg/Kg	☼	02/26/25 16:22	04/17/25 21:56	1
Nickel	30	B	0.87	0.035	mg/Kg	☼	02/26/25 16:22	04/17/25 21:56	1
Lead	29	B	0.17	0.017	mg/Kg	☼	02/26/25 16:22	04/17/25 21:56	1
Zinc	83		4.3	2.2	mg/Kg	☼	02/26/25 16:22	04/17/25 21:56	1

Client Sample ID: SRWB-3B2-A

Lab Sample ID: 350-1559-20
Date Collected: 02/09/25 06:33
Matrix: Solid
Date Received: 02/19/25 15:15
Percent Solids: 60.4

Method: EPA 1631B - Mercury, Low Level (CVAFS)

Analyte	Result	Qualifier	RL	MDL	Unit	D	Prepared	Analyzed	Dil Fac
Mercury	620		19	9.1	ng/g	☼	03/03/25 17:34	03/19/25 16:30	200

Method: EPA 1638 - Metals (ICP/MS)

Analyte	Result	Qualifier	RL	MDL	Unit	D	Prepared	Analyzed	Dil Fac
Arsenic	9.7		0.33	0.098	mg/Kg	☼	02/26/25 16:22	04/17/25 21:59	1
Barium	24000	B	33	0.065	mg/Kg	☼	02/26/25 16:22	04/17/25 21:59	1
Cadmium	1.4	B	0.033	0.0033	mg/Kg	☼	02/26/25 16:22	04/17/25 21:59	1
Chromium	43		0.33	0.33	mg/Kg	☼	02/26/25 16:22	04/17/25 21:59	1
Copper	22	B	0.16	0.020	mg/Kg	☼	02/26/25 16:22	04/17/25 21:59	1
Iron	18000	B	33	6.5	mg/Kg	☼	02/26/25 16:22	04/17/25 21:59	1
Manganese	540	B ^2	0.16	0.016	mg/Kg	☼	02/26/25 16:22	04/17/25 21:59	1
Nickel	34	B	0.65	0.026	mg/Kg	☼	02/26/25 16:22	04/17/25 21:59	1
Lead	48	E B	0.13	0.013	mg/Kg	☼	02/26/25 16:22	04/17/25 21:59	1
Zinc	280		3.3	1.6	mg/Kg	☼	02/26/25 16:22	04/17/25 21:59	1

Client Sample Results

Client: Tetra Tech Inc
Project/Site: Gulf of Thailand - 2025

Job ID: 350-1559-1

Client Sample ID: SRWB-3CP2-A

Lab Sample ID: 350-1559-21
Date Collected: 02/09/25 04:15
Matrix: Solid
Date Received: 02/19/25 15:15
Percent Solids: 50.4

Method: EPA 1631B - Mercury, Low Level (CVAFS)

Analyte	Result	Qualifier	RL	MDL	Unit	D	Prepared	Analyzed	Dil Fac
Mercury	26		2.1	1.0	ng/g	☼	03/03/25 17:34	03/19/25 16:34	20

Method: EPA 1638 - Metals (ICP/MS)

Analyte	Result	Qualifier	RL	MDL	Unit	D	Prepared	Analyzed	Dil Fac
Arsenic	5.7		0.38	0.11	mg/Kg	☼	02/26/25 16:22	04/17/25 21:25	1
Barium	670	F1 B	38	0.076	mg/Kg	☼	02/26/25 16:22	04/17/25 21:25	1
Cadmium	0.087	B	0.038	0.0038	mg/Kg	☼	02/26/25 16:22	04/17/25 21:25	1
Chromium	50		0.38	0.38	mg/Kg	☼	02/26/25 16:22	04/17/25 21:25	1
Copper	14	B	0.19	0.023	mg/Kg	☼	02/26/25 16:22	04/17/25 21:25	1
Iron	19000	B	38	7.6	mg/Kg	☼	02/26/25 16:22	04/17/25 21:25	1
Manganese	670	F1 B ^2	0.19	0.019	mg/Kg	☼	02/26/25 16:22	04/17/25 21:25	1
Nickel	27	B	0.76	0.031	mg/Kg	☼	02/26/25 16:22	04/17/25 21:25	1
Lead	22	B	0.15	0.015	mg/Kg	☼	02/26/25 16:22	04/17/25 21:25	1
Zinc	43		3.8	1.9	mg/Kg	☼	02/26/25 16:22	04/17/25 21:25	1

Client Sample ID: SRWB-3D2-A

Lab Sample ID: 350-1559-22
Date Collected: 02/09/25 05:20
Matrix: Solid
Date Received: 02/19/25 15:15
Percent Solids: 51.0

Method: EPA 1631B - Mercury, Low Level (CVAFS)

Analyte	Result	Qualifier	RL	MDL	Unit	D	Prepared	Analyzed	Dil Fac
Mercury	22		2.1	1.0	ng/g	☼	03/03/25 17:34	03/19/25 16:38	20

Method: EPA 1638 - Metals (ICP/MS)

Analyte	Result	Qualifier	RL	MDL	Unit	D	Prepared	Analyzed	Dil Fac
Arsenic	5.0		0.37	0.11	mg/Kg	☼	02/26/25 16:22	04/17/25 22:02	1
Barium	50000	B	370	0.74	mg/Kg	☼	02/26/25 16:22	04/21/25 19:07	10
Cadmium	0.087	B	0.037	0.0037	mg/Kg	☼	02/26/25 16:22	04/17/25 22:02	1
Chromium	47		0.37	0.37	mg/Kg	☼	02/26/25 16:22	04/17/25 22:02	1
Copper	12	B	0.18	0.022	mg/Kg	☼	02/26/25 16:22	04/17/25 22:02	1
Iron	16000	B	37	7.4	mg/Kg	☼	02/26/25 16:22	04/17/25 22:02	1
Manganese	680	B ^2	0.18	0.018	mg/Kg	☼	02/26/25 16:22	04/17/25 22:02	1
Nickel	25	B	0.74	0.029	mg/Kg	☼	02/26/25 16:22	04/17/25 22:02	1
Lead	20	B	0.15	0.015	mg/Kg	☼	02/26/25 16:22	04/17/25 22:02	1
Zinc	41		3.7	1.8	mg/Kg	☼	02/26/25 16:22	04/17/25 22:02	1

Client Sample ID: SRWB-4B2-A

Lab Sample ID: 350-1559-23
Date Collected: 02/09/25 05:47
Matrix: Solid
Date Received: 02/19/25 15:15
Percent Solids: 52.2

Method: EPA 1631B - Mercury, Low Level (CVAFS)

Analyte	Result	Qualifier	RL	MDL	Unit	D	Prepared	Analyzed	Dil Fac
Mercury	25		2.2	1.0	ng/g	☼	03/03/25 17:34	03/19/25 16:42	20

Method: EPA 1638 - Metals (ICP/MS)

Analyte	Result	Qualifier	RL	MDL	Unit	D	Prepared	Analyzed	Dil Fac
Arsenic	6.6		0.38	0.11	mg/Kg	☼	02/26/25 16:22	04/17/25 22:04	1
Barium	670	B	38	0.076	mg/Kg	☼	02/26/25 16:22	04/17/25 22:04	1
Cadmium	0.094	B	0.038	0.0038	mg/Kg	☼	02/26/25 16:22	04/17/25 22:04	1
Chromium	46		0.38	0.38	mg/Kg	☼	02/26/25 16:22	04/17/25 22:04	1
Copper	12	B	0.19	0.023	mg/Kg	☼	02/26/25 16:22	04/17/25 22:04	1

Client Sample Results

Client: Tetra Tech Inc
Project/Site: Gulf of Thailand - 2025

Job ID: 350-1559-1

Client Sample ID: SRWB-4B2-A

Lab Sample ID: 350-1559-23
Date Collected: 02/09/25 05:47
Matrix: Solid
Date Received: 02/19/25 15:15
Percent Solids: 52.2

Method: EPA 1638 - Metals (ICP/MS) (Continued)

Analyte	Result	Qualifier	RL	MDL	Unit	D	Prepared	Analyzed	Dil Fac
Iron	18000	B	38	7.6	mg/Kg	☼	02/26/25 16:22	04/17/25 22:04	1
Manganese	660	B ^2	0.19	0.019	mg/Kg	☼	02/26/25 16:22	04/17/25 22:04	1
Nickel	24	B	0.76	0.030	mg/Kg	☼	02/26/25 16:22	04/17/25 22:04	1
Lead	22	B	0.15	0.015	mg/Kg	☼	02/26/25 16:22	04/17/25 22:04	1
Zinc	39		3.8	1.9	mg/Kg	☼	02/26/25 16:22	04/17/25 22:04	1

Client Sample ID: SRWB-WB

Lab Sample ID: 350-1559-146
Date Collected: 02/09/25 12:35
Matrix: Water
Date Received: 02/19/25 15:15

Method: EPA 1631E - Mercury, Low Level (CVAFS)

Analyte	Result	Qualifier	RL	MDL	Unit	D	Prepared	Analyzed	Dil Fac
Mercury	ND		0.50	0.20	ng/L			03/17/25 22:52	1

Method: EPA 1640 - Metals (ICPMS)

Analyte	Result	Qualifier	RL	MDL	Unit	D	Prepared	Analyzed	Dil Fac
Arsenic	ND		0.70	0.63	ug/L		02/24/25 13:40	02/26/25 01:55	1
Cadmium	ND		0.020	0.013	ug/L		02/24/25 13:40	02/26/25 01:55	1
Chromium	ND		1.0	0.11	ug/L		02/24/25 13:40	02/26/25 01:55	1
Copper	1.3		0.50	0.43	ug/L		02/24/25 13:40	02/26/25 01:55	1
Lead	0.092		0.050	0.023	ug/L		02/24/25 13:40	02/26/25 01:55	1
Nickel	ND		0.50	0.15	ug/L		02/24/25 13:40	02/26/25 01:55	1
Zinc	ND		1.0	0.31	ug/L		02/24/25 13:40	02/26/25 01:55	1
Barium	ND		0.50	0.088	ug/L		02/24/25 13:40	02/26/25 01:55	1
Iron	ND	^+	5.0	0.81	ug/L		02/24/25 13:40	02/26/25 01:55	1
Manganese	0.13		0.050	0.030	ug/L		04/08/25 15:53	04/09/25 12:04	1

Client Sample ID: SRWB-EQ

Lab Sample ID: 350-1559-147
Date Collected: 02/09/25 12:40
Matrix: Water
Date Received: 02/19/25 15:15

Method: EPA 1631E - Mercury, Low Level (CVAFS)

Analyte	Result	Qualifier	RL	MDL	Unit	D	Prepared	Analyzed	Dil Fac
Mercury	ND		0.50	0.20	ng/L			03/17/25 22:56	1

Method: EPA 1640 - Metals (ICPMS)

Analyte	Result	Qualifier	RL	MDL	Unit	D	Prepared	Analyzed	Dil Fac
Arsenic	ND		0.70	0.63	ug/L		02/24/25 13:40	02/26/25 02:09	1
Cadmium	ND		0.020	0.013	ug/L		02/24/25 13:40	02/26/25 02:09	1
Chromium	ND		1.0	0.11	ug/L		02/24/25 13:40	02/26/25 02:09	1
Copper	ND		0.50	0.43	ug/L		02/24/25 13:40	02/26/25 02:09	1
Lead	ND		0.050	0.023	ug/L		02/24/25 13:40	02/26/25 02:09	1
Nickel	ND		0.50	0.15	ug/L		02/24/25 13:40	02/26/25 02:09	1
Zinc	0.40	J	1.0	0.31	ug/L		02/24/25 13:40	02/26/25 02:09	1
Barium	ND		0.50	0.088	ug/L		02/24/25 13:40	02/26/25 02:09	1
Iron	ND	^+	5.0	0.81	ug/L		02/24/25 13:40	02/26/25 02:09	1
Manganese	0.15		0.050	0.030	ug/L		04/08/25 15:53	04/09/25 12:19	1

Method: 1631B - Mercury, Low Level (CVAFS)

Lab Sample ID: MB 350-5298/1-A — **Client Sample ID: Method Blank**
Matrix: Solid — **Prep Type: Total/NA**
Analysis Batch: 5683 — **Prep Batch: 5298**

Analyte	MB Result	MB Qualifier	RL	MDL	Unit	D	Prepared	Analyzed	Dil Fac
Mercury	ND		1.2	0.58	ng/g		03/03/25 17:34	03/19/25 10:07	20

Lab Sample ID: MB 350-5298/2-A — **Client Sample ID: Method Blank**
Matrix: Solid — **Prep Type: Total/NA**
Analysis Batch: 5683 — **Prep Batch: 5298**

Analyte	MB Result	MB Qualifier	RL	MDL	Unit	D	Prepared	Analyzed	Dil Fac
Mercury	ND		1.2	0.58	ng/g		03/03/25 17:34	03/19/25 10:11	20

Lab Sample ID: MB 350-5298/3-A — **Client Sample ID: Method Blank**
Matrix: Solid — **Prep Type: Total/NA**
Analysis Batch: 5683 — **Prep Batch: 5298**

Analyte	MB Result	MB Qualifier	RL	MDL	Unit	D	Prepared	Analyzed	Dil Fac
Mercury	ND		1.2	0.58	ng/g		03/03/25 17:34	03/19/25 10:15	20

Lab Sample ID: LCS 350-5298/4-A — **Client Sample ID: Lab Control Sample**
Matrix: Solid — **Prep Type: Total/NA**
Analysis Batch: 5683 — **Prep Batch: 5298**

Analyte	Spike Added	LCS Result	LCS Qualifier	Unit	D	%Rec	%Rec Limits
Mercury	397	395		ng/g		99	75 - 125

Lab Sample ID: LCSD 350-5298/5-A — **Client Sample ID: Lab Control Sample Dup**
Matrix: Solid — **Prep Type: Total/NA**
Analysis Batch: 5683 — **Prep Batch: 5298**

Analyte	Spike Added	LCSD Result	LCSD Qualifier	Unit	D	%Rec	%Rec Limits	RPD	RPD Limit
Mercury	397	377		ng/g		95	75 - 125	5	24

Lab Sample ID: 350-1559-10 MS — **Client Sample ID: SRWA-1B2X-A**
Matrix: Solid — **Prep Type: Total/NA**
Analysis Batch: 5683 — **Prep Batch: 5298**

Analyte	Sample Result	Sample Qualifier	Spike Added	MS Result	MS Qualifier	Unit	D	%Rec	%Rec Limits
Mercury	55		658	657		ng/g	☼	91	71 - 125

Lab Sample ID: 350-1559-10 MSD — **Client Sample ID: SRWA-1B2X-A**
Matrix: Solid — **Prep Type: Total/NA**
Analysis Batch: 5683 — **Prep Batch: 5298**

Analyte	Sample Result	Sample Qualifier	Spike Added	MSD Result	MSD Qualifier	Unit	D	%Rec	%Rec Limits	RPD	RPD Limit
Mercury	55		666	648		ng/g	☼	89	71 - 125	1	24

Lab Sample ID: 350-1559-17 MS — **Client Sample ID: SRWB-1D2-A**
Matrix: Solid — **Prep Type: Total/NA**
Analysis Batch: 5683 — **Prep Batch: 5298**

Analyte	Sample Result	Sample Qualifier	Spike Added	MS Result	MS Qualifier	Unit	D	%Rec	%Rec Limits
Mercury	29		763	701		ng/g	☼	88	71 - 125

QC Sample Results

Client: Tetra Tech Inc
Project/Site: Gulf of Thailand - 2025

Job ID: 350-1559-1

Method: 1631B - Mercury, Low Level (CVAFS)

Lab Sample ID: 350-1559-17 MSD — **Client Sample ID: SRWB-1D2-A**
Matrix: Solid — **Prep Type: Total/NA**
Analysis Batch: 5683 — **Prep Batch: 5298**

Analyte	Sample Result	Sample Qualifier	Spike Added	MSD Result	MSD Qualifier	Unit	D	%Rec	%Rec Limits	RPD	RPD Limit
Mercury	29		808	761		ng/g	☼	91	71 - 125	8	24

Method: 1631E - Mercury, Low Level (CVAFS)

Lab Sample ID: MB 350-5384/17 — **Client Sample ID: Method Blank**
Matrix: Water — **Prep Type: Total/NA**
Analysis Batch: 5384

Analyte	MB Result	MB Qualifier	RL	MDL	Unit	D	Prepared	Analyzed	Dil Fac
Mercury	ND		0.50	0.20	ng/L			03/04/25 15:16	1

Lab Sample ID: MB 350-5384/18 — **Client Sample ID: Method Blank**
Matrix: Water — **Prep Type: Total/NA**
Analysis Batch: 5384

Analyte	MB Result	MB Qualifier	RL	MDL	Unit	D	Prepared	Analyzed	Dil Fac
Mercury	ND		0.50	0.20	ng/L			03/04/25 15:20	1

Lab Sample ID: MB 350-5384/19 — **Client Sample ID: Method Blank**
Matrix: Water — **Prep Type: Total/NA**
Analysis Batch: 5384

Analyte	MB Result	MB Qualifier	RL	MDL	Unit	D	Prepared	Analyzed	Dil Fac
Mercury	ND		0.50	0.20	ng/L			03/04/25 15:24	1

Lab Sample ID: LCS 350-5384/28 — **Client Sample ID: Lab Control Sample**
Matrix: Water — **Prep Type: Total/NA**
Analysis Batch: 5384

Analyte	Spike Added	LCS Result	LCS Qualifier	Unit	D	%Rec	%Rec Limits
Mercury	5.00	3.95		ng/L		79	77 - 123

Lab Sample ID: LCSD 350-5384/29 — **Client Sample ID: Lab Control Sample Dup**
Matrix: Water — **Prep Type: Total/NA**
Analysis Batch: 5384

Analyte	Spike Added	LCSD Result	LCSD Qualifier	Unit	D	%Rec	%Rec Limits	RPD	RPD Limit
Mercury	5.00	4.16		ng/L		83	77 - 123	5	24

Lab Sample ID: 350-1559-1 MS — **Client Sample ID: SRWB-1CP2-SW-1**
Matrix: Water — **Prep Type: Total/NA**
Analysis Batch: 5384

Analyte	Sample Result	Sample Qualifier	Spike Added	MS Result	MS Qualifier	Unit	D	%Rec	%Rec Limits
Mercury	0.23	J F1	5.00	3.15	F1	ng/L		58	71 - 125

Method: 1631E - Mercury, Low Level (CVAFS) (Continued)

Lab Sample ID: 350-1559-1 MSD — **Client Sample ID: SRWB-1CP2-SW-1**
Matrix: Water — **Prep Type: Total/NA**
Analysis Batch: 5384

Analyte	Sample Result	Sample Qualifier	Spike Added	MSD Result	MSD Qualifier	Unit	D	%Rec	%Rec Limits	RPD	RPD Limit
Mercury	0.23	J F1	5.00	3.14	F1	ng/L		58	71 - 125	0	24

Lab Sample ID: 350-1559-8 MS — **Client Sample ID: SRWB-3CP2-SW-40**
Matrix: Water — **Prep Type: Total/NA**
Analysis Batch: 5384

Analyte	Sample Result	Sample Qualifier	Spike Added	MS Result	MS Qualifier	Unit	D	%Rec	%Rec Limits
Mercury	ND	F1	5.00	2.97	F1	ng/L		59	71 - 125

Lab Sample ID: 350-1559-8 MSD — **Client Sample ID: SRWB-3CP2-SW-40**
Matrix: Water — **Prep Type: Total/NA**
Analysis Batch: 5384

Analyte	Sample Result	Sample Qualifier	Spike Added	MSD Result	MSD Qualifier	Unit	D	%Rec	%Rec Limits	RPD	RPD Limit
Mercury	ND	F1	5.00	2.96	F1	ng/L		59	71 - 125	0	24

Lab Sample ID: MB 350-5476/31 — **Client Sample ID: Method Blank**
Matrix: Water — **Prep Type: Total/NA**
Analysis Batch: 5476

Analyte	MB Result	MB Qualifier	RL	MDL	Unit	D	Prepared	Analyzed	Dil Fac
Mercury	ND		0.50	0.20	ng/L			03/10/25 14:15	1

Lab Sample ID: MB 350-5476/34 — **Client Sample ID: Method Blank**
Matrix: Water — **Prep Type: Total/NA**
Analysis Batch: 5476

Analyte	MB Result	MB Qualifier	RL	MDL	Unit	D	Prepared	Analyzed	Dil Fac
Mercury	ND		0.50	0.20	ng/L			03/10/25 14:27	1

Lab Sample ID: MB 350-5476/35 — **Client Sample ID: Method Blank**
Matrix: Water — **Prep Type: Total/NA**
Analysis Batch: 5476

Analyte	MB Result	MB Qualifier	RL	MDL	Unit	D	Prepared	Analyzed	Dil Fac
Mercury	ND		0.50	0.20	ng/L			03/10/25 14:32	1

Lab Sample ID: LCS 350-5476/42 — **Client Sample ID: Lab Control Sample**
Matrix: Water — **Prep Type: Total/NA**
Analysis Batch: 5476

Analyte	Spike Added	LCS Result	LCS Qualifier	Unit	D	%Rec	%Rec Limits
Mercury	5.00	4.24		ng/L		85	77 - 123

Lab Sample ID: LCSD 350-5476/43 — **Client Sample ID: Lab Control Sample Dup**
Matrix: Water — **Prep Type: Total/NA**
Analysis Batch: 5476

Analyte	Spike Added	LCSD Result	LCSD Qualifier	Unit	D	%Rec	%Rec Limits	RPD	RPD Limit
Mercury	5.00	4.15		ng/L		83	77 - 123	2	24

Method: 1631E - Mercury, Low Level (CVAFS)

Lab Sample ID: MB 350-5615/20
Matrix: Water
Analysis Batch: 5615

Client Sample ID: Method Blank
Prep Type: Total/NA

Analyte	MB Result	MB Qualifier	RL	MDL	Unit	D	Prepared	Analyzed	Dil Fac
Mercury	ND		0.50	0.20	ng/L			03/17/25 12:14	1

Lab Sample ID: MB 350-5615/23
Matrix: Water
Analysis Batch: 5615

Client Sample ID: Method Blank
Prep Type: Total/NA

Analyte	MB Result	MB Qualifier	RL	MDL	Unit	D	Prepared	Analyzed	Dil Fac
Mercury	ND		0.50	0.20	ng/L			03/17/25 12:26	1

Lab Sample ID: MB 350-5615/24
Matrix: Water
Analysis Batch: 5615

Client Sample ID: Method Blank
Prep Type: Total/NA

Analyte	MB Result	MB Qualifier	RL	MDL	Unit	D	Prepared	Analyzed	Dil Fac
Mercury	ND		0.50	0.20	ng/L			03/17/25 12:30	1

Lab Sample ID: LCS 350-5615/30
Matrix: Water
Analysis Batch: 5615

Client Sample ID: Lab Control Sample
Prep Type: Total/NA

Analyte			Spike Added	LCS Result	LCS Qualifier	Unit	D	%Rec	%Rec Limits		
Mercury			5.00	4.86		ng/L		97	77 - 123		

Lab Sample ID: LCSD 350-5615/31
Matrix: Water
Analysis Batch: 5615

Client Sample ID: Lab Control Sample Dup
Prep Type: Total/NA

Analyte			Spike Added	LCSD Result	LCSD Qualifier	Unit	D	%Rec	%Rec Limits	RPD	RPD Limit
Mercury			5.00	4.76		ng/L		95	77 - 123	2	24

Method: 1638 - Metals (ICP/MS)

Lab Sample ID: MB 350-5206/1-A
Matrix: Solid
Analysis Batch: 6354

Client Sample ID: Method Blank
Prep Type: Total/NA
Prep Batch: 5206

Analyte	MB Result	MB Qualifier	RL	MDL	Unit	D	Prepared	Analyzed	Dil Fac
Arsenic	ND		0.20	0.060	mg/Kg		02/25/25 18:24	03/03/25 14:56	1
Barium	0.0705	J	20	0.040	mg/Kg		02/25/25 18:24	03/03/25 14:56	1
Cadmium	ND		0.020	0.0020	mg/Kg		02/25/25 18:24	03/03/25 14:56	1
Chromium	ND		0.20	0.20	mg/Kg		02/25/25 18:24	03/03/25 14:56	1
Copper	ND		0.10	0.012	mg/Kg		02/25/25 18:24	03/03/25 14:56	1
Iron	ND		20	4.0	mg/Kg		02/25/25 18:24	03/03/25 14:56	1
Manganese	0.0430	J	0.10	0.010	mg/Kg		02/25/25 18:24	03/03/25 14:56	1
Nickel	0.111	J	0.40	0.016	mg/Kg		02/25/25 18:24	03/03/25 14:56	1
Lead	ND		0.080	0.0080	mg/Kg		02/25/25 18:24	03/03/25 14:56	1
Zinc	ND		2.0	1.0	mg/Kg		02/25/25 18:24	03/03/25 14:56	1

Method: 1638 - Metals (ICP/MS) (Continued)

Lab Sample ID: MB 350-5206/2-A
Matrix: Solid
Analysis Batch: 6354

Client Sample ID: Method Blank
Prep Type: Total/NA
Prep Batch: 5206

Analyte	MB Result	MB Qualifier	RL	MDL	Unit	D	Prepared	Analyzed	Dil Fac
Arsenic	ND		0.20	0.060	mg/Kg		02/25/25 18:24	03/03/25 14:58	1
Barium	0.0907	J	20	0.040	mg/Kg		02/25/25 18:24	03/03/25 14:58	1
Cadmium	ND		0.020	0.0020	mg/Kg		02/25/25 18:24	03/03/25 14:58	1
Chromium	ND		0.20	0.20	mg/Kg		02/25/25 18:24	03/03/25 14:58	1
Copper	0.122		0.10	0.012	mg/Kg		02/25/25 18:24	03/03/25 14:58	1
Iron	ND		20	4.0	mg/Kg		02/25/25 18:24	03/03/25 14:58	1
Manganese	0.0960	J	0.10	0.010	mg/Kg		02/25/25 18:24	03/03/25 14:58	1
Nickel	0.0479	J	0.40	0.016	mg/Kg		02/25/25 18:24	03/03/25 14:58	1
Lead	ND		0.080	0.0080	mg/Kg		02/25/25 18:24	03/03/25 14:58	1
Zinc	ND		2.0	1.0	mg/Kg		02/25/25 18:24	03/03/25 14:58	1

Lab Sample ID: LCS 350-5206/3-A
Matrix: Solid
Analysis Batch: 6354

Client Sample ID: Lab Control Sample
Prep Type: Total/NA
Prep Batch: 5206

Analyte	Spike Added	LCS Result	LCS Qualifier	Unit	D	%Rec	%Rec Limits
Arsenic	100	98.4		mg/Kg		98	75 - 125
Barium	100	102	J	mg/Kg		102	75 - 125
Cadmium	20.0	18.7		mg/Kg		93	75 - 125
Chromium	100	100		mg/Kg		100	75 - 125
Copper	100	104		mg/Kg		104	75 - 125
Iron	2500	2570		mg/Kg		103	75 - 125
Manganese	100	102		mg/Kg		102	75 - 125
Nickel	100	101		mg/Kg		101	75 - 125
Lead	100	102		mg/Kg		102	75 - 125
Zinc	100	102		mg/Kg		102	75 - 125

Lab Sample ID: LCSD 350-5206/4-A
Matrix: Solid
Analysis Batch: 6354

Client Sample ID: Lab Control Sample Dup
Prep Type: Total/NA
Prep Batch: 5206

Analyte	Spike Added	LCSD Result	LCSD Qualifier	Unit	D	%Rec	%Rec Limits	RPD	RPD Limit
Arsenic	100	97.6		mg/Kg		98	75 - 125	1	20
Barium	100	106	J	mg/Kg		106	75 - 125	4	20
Cadmium	20.0	18.5		mg/Kg		92	75 - 125	1	20
Chromium	100	98.6		mg/Kg		99	75 - 125	2	20
Copper	100	103		mg/Kg		103	75 - 125	1	20
Iron	2500	2500		mg/Kg		100	75 - 125	3	20
Manganese	100	99.5		mg/Kg		100	75 - 125	2	20
Nickel	100	99.4		mg/Kg		99	75 - 125	1	20
Lead	100	98.7		mg/Kg		99	75 - 125	3	20
Zinc	100	101		mg/Kg		101	75 - 125	1	20

Lab Sample ID: MB 350-5226/1-A
Matrix: Solid
Analysis Batch: 6294

Client Sample ID: Method Blank
Prep Type: Total/NA
Prep Batch: 5226

Analyte	MB Result	MB Qualifier	RL	MDL	Unit	D	Prepared	Analyzed	Dil Fac
Arsenic	ND		0.20	0.060	mg/Kg		02/26/25 16:22	04/17/25 19:48	1

Method: 1638 - Metals (ICP/MS) (Continued)

Lab Sample ID: MB 350-5226/1-A
Matrix: Solid
Analysis Batch: 6294

Client Sample ID: Method Blank
Prep Type: Total/NA
Prep Batch: 5226

Analyte	MB Result	MB Qualifier	RL	MDL	Unit	D	Prepared	Analyzed	Dil Fac
Barium	0.0788	J	20	0.040	mg/Kg		02/26/25 16:22	04/17/25 19:48	1
Cadmium	0.00808	J	0.020	0.0020	mg/Kg		02/26/25 16:22	04/17/25 19:48	1
Chromium	ND		0.20	0.20	mg/Kg		02/26/25 16:22	04/17/25 19:48	1
Copper	0.0593	J	0.10	0.012	mg/Kg		02/26/25 16:22	04/17/25 19:48	1
Iron	ND		20	4.0	mg/Kg		02/26/25 16:22	04/17/25 19:48	1
Manganese	0.0588	J	0.10	0.010	mg/Kg		02/26/25 16:22	04/17/25 19:48	1
Nickel	0.0402	J	0.40	0.016	mg/Kg		02/26/25 16:22	04/17/25 19:48	1
Lead	0.0373	J	0.080	0.0080	mg/Kg		02/26/25 16:22	04/17/25 19:48	1
Zinc	ND		2.0	1.0	mg/Kg		02/26/25 16:22	04/17/25 19:48	1

Lab Sample ID: MB 350-5226/2-A
Matrix: Solid
Analysis Batch: 6294

Client Sample ID: Method Blank
Prep Type: Total/NA
Prep Batch: 5226

Analyte	MB Result	MB Qualifier	RL	MDL	Unit	D	Prepared	Analyzed	Dil Fac
Arsenic	ND		0.20	0.060	mg/Kg		02/26/25 16:22	04/17/25 19:51	1
Barium	0.0791	J	20	0.040	mg/Kg		02/26/25 16:22	04/17/25 19:51	1
Cadmium	ND		0.020	0.0020	mg/Kg		02/26/25 16:22	04/17/25 19:51	1
Chromium	ND		0.20	0.20	mg/Kg		02/26/25 16:22	04/17/25 19:51	1
Copper	0.0415	J	0.10	0.012	mg/Kg		02/26/25 16:22	04/17/25 19:51	1
Iron	5.16	J	20	4.0	mg/Kg		02/26/25 16:22	04/17/25 19:51	1
Manganese	0.120		0.10	0.010	mg/Kg		02/26/25 16:22	04/17/25 19:51	1
Nickel	0.188	J	0.40	0.016	mg/Kg		02/26/25 16:22	04/17/25 19:51	1
Lead	0.0127	J	0.080	0.0080	mg/Kg		02/26/25 16:22	04/17/25 19:51	1
Zinc	ND		2.0	1.0	mg/Kg		02/26/25 16:22	04/17/25 19:51	1

Lab Sample ID: LCS 350-5226/3-A
Matrix: Solid
Analysis Batch: 6294

Client Sample ID: Lab Control Sample
Prep Type: Total/NA
Prep Batch: 5226

Analyte	Spike Added	LCS Result	LCS Qualifier	Unit	D	%Rec	%Rec Limits
Arsenic	100	96.0		mg/Kg		96	75 - 125
Barium	100	97.9	J	mg/Kg		98	75 - 125
Cadmium	20.0	18.8		mg/Kg		94	75 - 125
Chromium	100	99.2		mg/Kg		99	75 - 125
Copper	100	101		mg/Kg		101	75 - 125
Iron	2500	2340		mg/Kg		94	75 - 125
Manganese	100	93.6		mg/Kg		94	75 - 125
Nickel	100	95.6		mg/Kg		96	75 - 125
Lead	100	96.5		mg/Kg		96	75 - 125
Zinc	100	97.9		mg/Kg		98	75 - 125

Lab Sample ID: LCSD 350-5226/4-A
Matrix: Solid
Analysis Batch: 6294

Client Sample ID: Lab Control Sample Dup
Prep Type: Total/NA
Prep Batch: 5226

Analyte	Spike Added	LCSD Result	LCSD Qualifier	Unit	D	%Rec	%Rec Limits	RPD	RPD Limit
Arsenic	100	90.1		mg/Kg		90	75 - 125	6	20
Barium	100	90.9	J	mg/Kg		91	75 - 125	7	20

Method: 1638 - Metals (ICP/MS) (Continued)

Lab Sample ID: LCSD 350-5226/4-A
Matrix: Solid
Analysis Batch: 6294

Client Sample ID: Lab Control Sample Dup
Prep Type: Total/NA
Prep Batch: 5226

Analyte	Spike Added	LCSD Result	LCSD Qualifier	Unit	D	%Rec	%Rec Limits	RPD	RPD Limit
Cadmium	20.0	17.7		mg/Kg		89	75 - 125	6	20
Chromium	100	95.9		mg/Kg		96	75 - 125	3	20
Copper	100	98.7		mg/Kg		99	75 - 125	2	20
Iron	2500	2230		mg/Kg		89	75 - 125	5	20
Manganese	100	92.7		mg/Kg		93	75 - 125	1	20
Nickel	100	93.4		mg/Kg		93	75 - 125	2	20
Lead	100	92.6		mg/Kg		93	75 - 125	4	20
Zinc	100	94.0		mg/Kg		94	75 - 125	4	20

Lab Sample ID: 350-1559-21 MS
Matrix: Solid
Analysis Batch: 6294

Client Sample ID: SRWB-3CP2-A
Prep Type: Total/NA
Prep Batch: 5226

Analyte	Sample Result	Sample Qualifier	Spike Added	MS Result	MS Qualifier	Unit	D	%Rec	%Rec Limits
Arsenic	5.7		193	186		mg/Kg	☼	93	75 - 125
Barium	670	F1 B	193	994	F1	mg/Kg	☼	170	75 - 125
Cadmium	0.087	B	38.6	35.8		mg/Kg	☼	92	75 - 125
Chromium	50		193	238		mg/Kg	☼	97	75 - 125
Copper	14	B	193	205		mg/Kg	☼	99	70 - 130
Iron	19000	B	4820	22800		mg/Kg	☼	85	75 - 125
Manganese	670	F1 B ^2	193	835		mg/Kg	☼	83	75 - 125
Nickel	27	B	193	212		mg/Kg	☼	96	75 - 125
Lead	22	B	193	208		mg/Kg	☼	96	75 - 125
Zinc	43		193	227		mg/Kg	☼	95	65 - 135

Lab Sample ID: 350-1559-21 MSD
Matrix: Solid
Analysis Batch: 6294

Client Sample ID: SRWB-3CP2-A
Prep Type: Total/NA
Prep Batch: 5226

Analyte	Sample Result	Sample Qualifier	Spike Added	MSD Result	MSD Qualifier	Unit	D	%Rec	%Rec Limits	RPD	RPD Limit
Arsenic	5.7		193	191		mg/Kg	☼	96	75 - 125	3	20
Barium	670	F1 B	193	1130	F1	mg/Kg	☼	243	75 - 125	13	20
Cadmium	0.087	B	38.6	36.2		mg/Kg	☼	93	75 - 125	1	20
Chromium	50		193	242		mg/Kg	☼	99	75 - 125	1	20
Copper	14	B	193	206		mg/Kg	☼	100	70 - 130	0	20
Iron	19000	B	4830	23000		mg/Kg	☼	90	75 - 125	1	20
Manganese	670	F1 B ^2	193	814	F1	mg/Kg	☼	72	75 - 125	2	20
Nickel	27	B	193	214		mg/Kg	☼	97	75 - 125	1	20
Lead	22	B	193	211		mg/Kg	☼	98	75 - 125	1	20
Zinc	43		193	232		mg/Kg	☼	98	65 - 135	2	20

Method: 1640 - Metals (ICPMS)

Lab Sample ID: MB 350-5184/1-A
Matrix: Water
Analysis Batch: 5238

Client Sample ID: Method Blank
Prep Type: Total/NA
Prep Batch: 5184

Analyte	MB Result	MB Qualifier	RL	MDL	Unit	D	Prepared	Analyzed	Dil Fac
Arsenic	ND		0.70	0.63	ug/L		02/24/25 13:30	02/25/25 01:31	1
Cadmium	ND		0.020	0.013	ug/L		02/24/25 13:30	02/25/25 01:31	1

Method: 1640 - Metals (ICPMS) (Continued)

Lab Sample ID: MB 350-5184/1-A
Matrix: Water
Analysis Batch: 5238

Client Sample ID: Method Blank
Prep Type: Total/NA
Prep Batch: 5184

Analyte	MB Result	MB Qualifier	RL	MDL	Unit	D	Prepared	Analyzed	Dil Fac
Chromium	ND		1.0	0.11	ug/L		02/24/25 13:30	02/25/25 01:31	1
Copper	ND		0.50	0.43	ug/L		02/24/25 13:30	02/25/25 01:31	1
Lead	ND		0.050	0.023	ug/L		02/24/25 13:30	02/25/25 01:31	1
Nickel	ND		0.50	0.15	ug/L		02/24/25 13:30	02/25/25 01:31	1
Zinc	ND		1.0	0.31	ug/L		02/24/25 13:30	02/25/25 01:31	1
Barium	ND		0.50	0.088	ug/L		02/24/25 13:30	02/25/25 01:31	1
Iron	ND		5.0	0.81	ug/L		02/24/25 13:30	02/25/25 01:31	1
Manganese	ND		0.050	0.030	ug/L		02/24/25 13:30	02/25/25 01:31	1

Lab Sample ID: MB 350-5184/2-A
Matrix: Water
Analysis Batch: 5238

Client Sample ID: Method Blank
Prep Type: Total/NA
Prep Batch: 5184

Analyte	MB Result	MB Qualifier	RL	MDL	Unit	D	Prepared	Analyzed	Dil Fac
Arsenic	ND		0.70	0.63	ug/L		02/24/25 13:30	02/25/25 01:45	1
Cadmium	ND		0.020	0.013	ug/L		02/24/25 13:30	02/25/25 01:45	1
Chromium	ND		1.0	0.11	ug/L		02/24/25 13:30	02/25/25 01:45	1
Copper	ND		0.50	0.43	ug/L		02/24/25 13:30	02/25/25 01:45	1
Lead	ND		0.050	0.023	ug/L		02/24/25 13:30	02/25/25 01:45	1
Nickel	ND		0.50	0.15	ug/L		02/24/25 13:30	02/25/25 01:45	1
Zinc	ND		1.0	0.31	ug/L		02/24/25 13:30	02/25/25 01:45	1
Barium	ND		0.50	0.088	ug/L		02/24/25 13:30	02/25/25 01:45	1
Iron	ND		5.0	0.81	ug/L		02/24/25 13:30	02/25/25 01:45	1
Manganese	ND		0.050	0.030	ug/L		02/24/25 13:30	02/25/25 01:45	1

Lab Sample ID: LCS 350-5184/3-A
Matrix: Water
Analysis Batch: 5238

Client Sample ID: Lab Control Sample
Prep Type: Total/NA
Prep Batch: 5184

Analyte	Spike Added	LCS Result	LCS Qualifier	Unit	D	%Rec	%Rec Limits
Arsenic	12.5	11.3		ug/L		90	70 - 130
Cadmium	1.25	1.18		ug/L		94	70 - 130
Chromium	12.5	13.2		ug/L		105	70 - 130
Copper	12.5	13.3		ug/L		107	70 - 130
Lead	2.50	2.38		ug/L		95	70 - 130
Nickel	12.5	12.6		ug/L		101	70 - 130
Zinc	12.5	12.8		ug/L		102	70 - 130
Barium	12.5	12.5		ug/L		100	70 - 130
Iron	62.5	65.6		ug/L		105	70 - 130
Manganese	12.5	13.7		ug/L		110	70 - 130

Lab Sample ID: LCSD 350-5184/4-A
Matrix: Water
Analysis Batch: 5238

Client Sample ID: Lab Control Sample Dup
Prep Type: Total/NA
Prep Batch: 5184

Analyte	Spike Added	LCSD Result	LCSD Qualifier	Unit	D	%Rec	%Rec Limits	RPD	RPD Limit
Arsenic	12.5	12.2		ug/L		98	70 - 130	8	20
Cadmium	1.25	1.22		ug/L		98	70 - 130	4	20
Chromium	12.5	13.2		ug/L		105	70 - 130	0	20

Method: 1640 - Metals (ICPMS) (Continued)

Lab Sample ID: LCSD 350-5184/4-A
Matrix: Water
Analysis Batch: 5238

Client Sample ID: Lab Control Sample Dup
Prep Type: Total/NA
Prep Batch: 5184

Analyte	Spike Added	LCSD Result	LCSD Qualifier	Unit	D	%Rec	%Rec Limits	RPD	RPD Limit
Copper	12.5	13.9		ug/L		111	70 - 130	4	20
Lead	2.50	2.46		ug/L		98	70 - 130	3	20
Nickel	12.5	13.1		ug/L		105	70 - 130	3	20
Zinc	12.5	13.2		ug/L		106	70 - 130	3	20
Barium	12.5	12.4		ug/L		99	70 - 130	1	20
Iron	62.5	68.4		ug/L		110	70 - 130	4	20
Manganese	12.5	14.2		ug/L		113	70 - 130	3	20

Lab Sample ID: 350-1559-1 MS
Matrix: Water
Analysis Batch: 5238

Client Sample ID: SRWB-1CP2-SW-1
Prep Type: Total/NA
Prep Batch: 5184

Analyte	Sample Result	Sample Qualifier	Spike Added	MS Result	MS Qualifier	Unit	D	%Rec	%Rec Limits
Arsenic	1.9		12.5	19.8		ug/L		143	50 - 150
Cadmium	ND		1.25	1.22		ug/L		98	50 - 150
Chromium	0.71	J	12.5	11.8		ug/L		88	50 - 150
Copper	ND		12.5	15.1		ug/L		120	50 - 150
Lead	ND		2.50	2.22		ug/L		89	50 - 150
Nickel	0.20	J	12.5	14.2		ug/L		112	50 - 150
Zinc	ND		12.5	14.5		ug/L		116	50 - 150
Barium	7.3		12.5	18.4		ug/L		89	50 - 150
Iron	1.1	J	62.5	78.8		ug/L		124	50 - 150
Manganese	0.59		12.5	15.9		ug/L		122	50 - 150

Lab Sample ID: 350-1559-1 MSD
Matrix: Water
Analysis Batch: 5238

Client Sample ID: SRWB-1CP2-SW-1
Prep Type: Total/NA
Prep Batch: 5184

Analyte	Sample Result	Sample Qualifier	Spike Added	MSD Result	MSD Qualifier	Unit	D	%Rec	%Rec Limits	RPD	RPD Limit
Arsenic	1.9		12.5	20.6		ug/L		149	50 - 150	4	20
Cadmium	ND		1.25	1.22		ug/L		97	50 - 150	1	20
Chromium	0.71	J	12.5	11.7		ug/L		88	50 - 150	1	20
Copper	ND		12.5	14.6		ug/L		117	50 - 150	3	20
Lead	ND		2.50	2.21		ug/L		88	50 - 150	1	20
Nickel	0.20	J	12.5	13.6		ug/L		107	50 - 150	4	20
Zinc	ND		12.5	14.1		ug/L		113	50 - 150	3	20
Barium	7.3		12.5	17.9		ug/L		85	50 - 150	3	20
Iron	1.1	J	62.5	76.2		ug/L		120	50 - 150	3	20
Manganese	0.59		12.5	15.4		ug/L		118	50 - 150	3	20

Lab Sample ID: 350-1559-2 MS
Matrix: Water
Analysis Batch: 5238

Client Sample ID: SRWB-1CP2-SW-20
Prep Type: Total/NA
Prep Batch: 5184

Analyte	Sample Result	Sample Qualifier	Spike Added	MS Result	MS Qualifier	Unit	D	%Rec	%Rec Limits
Arsenic	2.0	F1	12.5	20.0		ug/L		143	50 - 150
Cadmium	ND		1.25	1.22		ug/L		98	50 - 150
Chromium	0.79	J	12.5	11.6		ug/L		87	50 - 150
Copper	0.43	J	12.5	15.0		ug/L		120	50 - 150

Method: 1640 - Metals (ICPMS) (Continued)

Lab Sample ID: 350-1559-2 MS — **Client Sample ID: SRWB-1CP2-SW-20**
Matrix: Water — **Prep Type: Total/NA**
Analysis Batch: 5238 — **Prep Batch: 5184**

Analyte	Sample Result	Sample Qualifier	Spike Added	MS Result	MS Qualifier	Unit	D	%Rec	%Rec Limits
Lead	ND		2.50	2.24		ug/L		90	50 - 150
Nickel	0.22	J	12.5	14.0		ug/L		110	50 - 150
Zinc	ND		12.5	14.5		ug/L		116	50 - 150
Barium	7.1		12.5	18.0		ug/L		87	50 - 150
Iron	0.98	J	62.5	76.2		ug/L		120	50 - 150
Manganese	0.54		12.5	15.4		ug/L		119	50 - 150

Lab Sample ID: 350-1559-2 MSD — **Client Sample ID: SRWB-1CP2-SW-20**
Matrix: Water — **Prep Type: Total/NA**
Analysis Batch: 5238 — **Prep Batch: 5184**

Analyte	Sample Result	Sample Qualifier	Spike Added	MSD Result	MSD Qualifier	Unit	D	%Rec	%Rec Limits	RPD	RPD Limit
Arsenic	2.0	F1	12.5	21.3	F1	ug/L		154	50 - 150	7	20
Cadmium	ND		1.25	1.22		ug/L		97	50 - 150	0	20
Chromium	0.79	J	12.5	12.1		ug/L		90	50 - 150	3	20
Copper	0.43	J	12.5	14.8		ug/L		119	50 - 150	2	20
Lead	ND		2.50	2.25		ug/L		90	50 - 150	0	20
Nickel	0.22	J	12.5	13.9		ug/L		109	50 - 150	1	20
Zinc	ND		12.5	14.1		ug/L		113	50 - 150	3	20
Barium	7.1		12.5	18.2		ug/L		89	50 - 150	1	20
Iron	0.98	J	62.5	75.2		ug/L		119	50 - 150	1	20
Manganese	0.54		12.5	15.5		ug/L		119	50 - 150	0	20

Lab Sample ID: MB 350-5188/1-A — **Client Sample ID: Method Blank**
Matrix: Water — **Prep Type: Total/NA**
Analysis Batch: 5238 — **Prep Batch: 5188**

Analyte	MB Result	MB Qualifier	RL	MDL	Unit	D	Prepared	Analyzed	Dil Fac
Arsenic	ND		0.70	0.63	ug/L		02/24/25 13:40	02/25/25 09:01	1
Cadmium	ND		0.020	0.013	ug/L		02/24/25 13:40	02/25/25 09:01	1
Chromium	ND		1.0	0.11	ug/L		02/24/25 13:40	02/25/25 09:01	1
Copper	ND		0.50	0.43	ug/L		02/24/25 13:40	02/25/25 09:01	1
Lead	ND		0.050	0.023	ug/L		02/24/25 13:40	02/25/25 09:01	1
Nickel	ND		0.50	0.15	ug/L		02/24/25 13:40	02/25/25 09:01	1
Zinc	ND		1.0	0.31	ug/L		02/24/25 13:40	02/25/25 09:01	1
Barium	ND		0.50	0.088	ug/L		02/24/25 13:40	02/25/25 09:01	1
Iron	ND		5.0	0.81	ug/L		02/24/25 13:40	02/25/25 09:01	1
Manganese	ND		0.050	0.030	ug/L		02/24/25 13:40	02/25/25 09:01	1

Lab Sample ID: MB 350-5188/2-A — **Client Sample ID: Method Blank**
Matrix: Water — **Prep Type: Total/NA**
Analysis Batch: 5238 — **Prep Batch: 5188**

Analyte	MB Result	MB Qualifier	RL	MDL	Unit	D	Prepared	Analyzed	Dil Fac
Arsenic	ND		0.70	0.63	ug/L		02/24/25 13:40	02/25/25 09:15	1
Cadmium	ND		0.020	0.013	ug/L		02/24/25 13:40	02/25/25 09:15	1
Chromium	ND		1.0	0.11	ug/L		02/24/25 13:40	02/25/25 09:15	1
Copper	ND		0.50	0.43	ug/L		02/24/25 13:40	02/25/25 09:15	1
Lead	ND		0.050	0.023	ug/L		02/24/25 13:40	02/25/25 09:15	1

Method: 1640 - Metals (ICPMS) (Continued)

Lab Sample ID: MB 350-5188/2-A
Matrix: Water
Analysis Batch: 5238

Client Sample ID: Method Blank
Prep Type: Total/NA
Prep Batch: 5188

Analyte	MB Result	MB Qualifier	RL	MDL	Unit	D	Prepared	Analyzed	Dil Fac
Nickel	ND		0.50	0.15	ug/L		02/24/25 13:40	02/25/25 09:15	1
Zinc	ND		1.0	0.31	ug/L		02/24/25 13:40	02/25/25 09:15	1
Barium	ND		0.50	0.088	ug/L		02/24/25 13:40	02/25/25 09:15	1
Iron	ND		5.0	0.81	ug/L		02/24/25 13:40	02/25/25 09:15	1
Manganese	ND		0.050	0.030	ug/L		02/24/25 13:40	02/25/25 09:15	1

Lab Sample ID: LCS 350-5188/3-A
Matrix: Water
Analysis Batch: 5238

Client Sample ID: Lab Control Sample
Prep Type: Total/NA
Prep Batch: 5188

Analyte	Spike Added	LCS Result	LCS Qualifier	Unit	D	%Rec	%Rec Limits
Arsenic	12.5	11.2		ug/L		90	70 - 130
Cadmium	1.25	1.21		ug/L		97	70 - 130
Chromium	12.5	13.8		ug/L		111	70 - 130
Copper	12.5	13.4		ug/L		107	70 - 130
Lead	2.50	2.43		ug/L		97	70 - 130
Nickel	12.5	12.8		ug/L		102	70 - 130
Zinc	12.5	13.3		ug/L		106	70 - 130
Barium	12.5	13.1		ug/L		105	70 - 130
Iron	62.5	68.6		ug/L		110	70 - 130
Manganese	12.5	14.1		ug/L		112	70 - 130

Lab Sample ID: LCSD 350-5188/4-A
Matrix: Water
Analysis Batch: 5238

Client Sample ID: Lab Control Sample Dup
Prep Type: Total/NA
Prep Batch: 5188

Analyte	Spike Added	LCSD Result	LCSD Qualifier	Unit	D	%Rec	%Rec Limits	RPD	RPD Limit
Arsenic	12.5	12.6		ug/L		101	70 - 130	11	20
Cadmium	1.25	1.24		ug/L		99	70 - 130	2	20
Chromium	12.5	13.4		ug/L		108	70 - 130	3	20
Copper	12.5	13.9		ug/L		111	70 - 130	4	20
Lead	2.50	2.48		ug/L		99	70 - 130	2	20
Nickel	12.5	13.0		ug/L		104	70 - 130	2	20
Zinc	12.5	13.7		ug/L		110	70 - 130	3	20
Barium	12.5	13.1		ug/L		105	70 - 130	0	20
Iron	62.5	71.6		ug/L		115	70 - 130	4	20
Manganese	12.5	14.1		ug/L		113	70 - 130	1	20

Lab Sample ID: MB 350-6089/1-A
Matrix: Water
Analysis Batch: 6254

Client Sample ID: Method Blank
Prep Type: Total/NA
Prep Batch: 6089

Analyte	MB Result	MB Qualifier	RL	MDL	Unit	D	Prepared	Analyzed	Dil Fac
Manganese	ND		0.050	0.030	ug/L		04/08/25 15:53	04/09/25 05:43	1

Method: 1640 - Metals (ICPMS) (Continued)

Lab Sample ID: MB 350-6089/2-A
Matrix: Water
Analysis Batch: 6254

Client Sample ID: Method Blank
Prep Type: Total/NA
Prep Batch: 6089

Analyte	MB Result	MB Qualifier	RL	MDL	Unit	D	Prepared	Analyzed	Dil Fac
Manganese	ND		0.050	0.030	ug/L		04/08/25 15:53	04/09/25 05:57	1

Lab Sample ID: LCS 350-6089/3-A
Matrix: Water
Analysis Batch: 6254

Client Sample ID: Lab Control Sample
Prep Type: Total/NA
Prep Batch: 6089

Analyte	Spike Added	LCS Result	LCS Qualifier	Unit	D	%Rec	%Rec Limits
Manganese	12.5	9.90		ug/L		79	70 - 130

Lab Sample ID: LCSD 350-6089/4-A
Matrix: Water
Analysis Batch: 6254

Client Sample ID: Lab Control Sample Dup
Prep Type: Total/NA
Prep Batch: 6089

Analyte	Spike Added	LCSD Result	LCSD Qualifier	Unit	D	%Rec	%Rec Limits	RPD	RPD Limit
Manganese	12.5	9.81		ug/L		79	70 - 130	1	20

QC Association Summary

Client: Tetra Tech Inc
Project/Site: Gulf of Thailand - 2025

Job ID: 350-1559-1

Metals

Prep Batch: 5184

Lab Sample ID	Client Sample ID	Prep Type	Matrix	Method	Prep Batch
350-1559-1	SRWB-1CP2-SW-1	Total/NA	Water	1640	
350-1559-2	SRWB-1CP2-SW-20	Total/NA	Water	1640	
350-1559-3	SRWB-1CP2-SW-40	Total/NA	Water	1640	
350-1559-4	SRWB-1CP2-SW-40-FD	Total/NA	Water	1640	
350-1559-5	SRWB-1CP2-SW-B	Total/NA	Water	1640	
350-1559-6	SRWB-3CP2-SW-1	Total/NA	Water	1640	
350-1559-7	SRWB-3CP2-SW-20	Total/NA	Water	1640	
350-1559-8	SRWB-3CP2-SW-40	Total/NA	Water	1640	
350-1559-9	SRWB-3CP2-SW-B	Total/NA	Water	1640	
MB 350-5184/1-A	Method Blank	Total/NA	Water	1640	
MB 350-5184/2-A	Method Blank	Total/NA	Water	1640	
LCS 350-5184/3-A	Lab Control Sample	Total/NA	Water	1640	
LCSD 350-5184/4-A	Lab Control Sample Dup	Total/NA	Water	1640	
350-1559-1 MS	SRWB-1CP2-SW-1	Total/NA	Water	1640	
350-1559-1 MSD	SRWB-1CP2-SW-1	Total/NA	Water	1640	
350-1559-2 MS	SRWB-1CP2-SW-20	Total/NA	Water	1640	
350-1559-2 MSD	SRWB-1CP2-SW-20	Total/NA	Water	1640	

Prep Batch: 5188

Lab Sample ID	Client Sample ID	Prep Type	Matrix	Method	Prep Batch
350-1559-146	SRWB-WB	Total/NA	Water	1640	
350-1559-147	SRWB-EQ	Total/NA	Water	1640	
MB 350-5188/1-A	Method Blank	Total/NA	Water	1640	
MB 350-5188/2-A	Method Blank	Total/NA	Water	1640	
LCS 350-5188/3-A	Lab Control Sample	Total/NA	Water	1640	
LCSD 350-5188/4-A	Lab Control Sample Dup	Total/NA	Water	1640	

Prep Batch: 5206

Lab Sample ID	Client Sample ID	Prep Type	Matrix	Method	Prep Batch
350-1559-10	SRWA-1B2X-A	Total/NA	Solid	HF Bomb Prep	
350-1559-11	SRWA-2B2X-A	Total/NA	Solid	HF Bomb Prep	
350-1559-12	SRWA-2B2X-A-FD	Total/NA	Solid	HF Bomb Prep	
350-1559-13	SRWA-3B2X-A	Total/NA	Solid	HF Bomb Prep	
350-1559-14	SRWA-4B2X-A	Total/NA	Solid	HF Bomb Prep	
MB 350-5206/1-A	Method Blank	Total/NA	Solid	HF Bomb Prep	
MB 350-5206/2-A	Method Blank	Total/NA	Solid	HF Bomb Prep	
LCS 350-5206/3-A	Lab Control Sample	Total/NA	Solid	HF Bomb Prep	
LCSD 350-5206/4-A	Lab Control Sample Dup	Total/NA	Solid	HF Bomb Prep	

Prep Batch: 5226

Lab Sample ID	Client Sample ID	Prep Type	Matrix	Method	Prep Batch
350-1559-15	SRWB-1B2-A	Total/NA	Solid	HF Bomb Prep	
350-1559-16	SRWB-1CP2-A	Total/NA	Solid	HF Bomb Prep	
350-1559-17	SRWB-1D2-A	Total/NA	Solid	HF Bomb Prep	
350-1559-18	SRWB-2B2X-A	Total/NA	Solid	HF Bomb Prep	
350-1559-19	SRWB-2B2X-A-FD	Total/NA	Solid	HF Bomb Prep	
350-1559-20	SRWB-3B2-A	Total/NA	Solid	HF Bomb Prep	
350-1559-21	SRWB-3CP2-A	Total/NA	Solid	HF Bomb Prep	
350-1559-22	SRWB-3D2-A	Total/NA	Solid	HF Bomb Prep	
350-1559-23	SRWB-4B2-A	Total/NA	Solid	HF Bomb Prep	
MB 350-5226/1-A	Method Blank	Total/NA	Solid	HF Bomb Prep	

Metals (Continued)

Prep Batch: 5226 (Continued)

Lab Sample ID	Client Sample ID	Prep Type	Matrix	Method	Prep Batch
MB 350-5226/2-A	Method Blank	Total/NA	Solid	HF Bomb Prep	
LCS 350-5226/3-A	Lab Control Sample	Total/NA	Solid	HF Bomb Prep	
LCSD 350-5226/4-A	Lab Control Sample Dup	Total/NA	Solid	HF Bomb Prep	
350-1559-21 MS	SRWB-3CP2-A	Total/NA	Solid	HF Bomb Prep	
350-1559-21 MSD	SRWB-3CP2-A	Total/NA	Solid	HF Bomb Prep	

Analysis Batch: 5238

Lab Sample ID	Client Sample ID	Prep Type	Matrix	Method	Prep Batch
350-1559-1	SRWB-1CP2-SW-1	Total/NA	Water	1640	5184
350-1559-2	SRWB-1CP2-SW-20	Total/NA	Water	1640	5184
350-1559-3	SRWB-1CP2-SW-40	Total/NA	Water	1640	5184
350-1559-4	SRWB-1CP2-SW-40-FD	Total/NA	Water	1640	5184
350-1559-5	SRWB-1CP2-SW-B	Total/NA	Water	1640	5184
350-1559-6	SRWB-3CP2-SW-1	Total/NA	Water	1640	5184
350-1559-7	SRWB-3CP2-SW-20	Total/NA	Water	1640	5184
350-1559-8	SRWB-3CP2-SW-40	Total/NA	Water	1640	5184
350-1559-9	SRWB-3CP2-SW-B	Total/NA	Water	1640	5184
350-1559-146	SRWB-WB	Total/NA	Water	1640	5188
350-1559-147	SRWB-EQ	Total/NA	Water	1640	5188
MB 350-5184/1-A	Method Blank	Total/NA	Water	1640	5184
MB 350-5184/2-A	Method Blank	Total/NA	Water	1640	5184
MB 350-5188/1-A	Method Blank	Total/NA	Water	1640	5188
MB 350-5188/2-A	Method Blank	Total/NA	Water	1640	5188
LCS 350-5184/3-A	Lab Control Sample	Total/NA	Water	1640	5184
LCS 350-5188/3-A	Lab Control Sample	Total/NA	Water	1640	5188
LCSD 350-5184/4-A	Lab Control Sample Dup	Total/NA	Water	1640	5184
LCSD 350-5188/4-A	Lab Control Sample Dup	Total/NA	Water	1640	5188
350-1559-1 MS	SRWB-1CP2-SW-1	Total/NA	Water	1640	5184
350-1559-1 MSD	SRWB-1CP2-SW-1	Total/NA	Water	1640	5184
350-1559-2 MS	SRWB-1CP2-SW-20	Total/NA	Water	1640	5184
350-1559-2 MSD	SRWB-1CP2-SW-20	Total/NA	Water	1640	5184

Prep Batch: 5298

Lab Sample ID	Client Sample ID	Prep Type	Matrix	Method	Prep Batch
350-1559-10	SRWA-1B2X-A	Total/NA	Solid	1631B CAR Prep	
350-1559-11	SRWA-2B2X-A	Total/NA	Solid	1631B CAR Prep	
350-1559-12	SRWA-2B2X-A-FD	Total/NA	Solid	1631B CAR Prep	
350-1559-13	SRWA-3B2X-A	Total/NA	Solid	1631B CAR Prep	
350-1559-14	SRWA-4B2X-A	Total/NA	Solid	1631B CAR Prep	
350-1559-15	SRWB-1B2-A	Total/NA	Solid	1631B CAR Prep	
350-1559-16	SRWB-1CP2-A	Total/NA	Solid	1631B CAR Prep	
350-1559-17	SRWB-1D2-A	Total/NA	Solid	1631B CAR Prep	
350-1559-18	SRWB-2B2X-A	Total/NA	Solid	1631B CAR Prep	
350-1559-19	SRWB-2B2X-A-FD	Total/NA	Solid	1631B CAR Prep	

Metals (Continued)

Prep Batch: 5298 (Continued)

Lab Sample ID	Client Sample ID	Prep Type	Matrix	Method	Prep Batch
350-1559-20	SRWB-3B2-A	Total/NA	Solid	1631B CAR Prep	
350-1559-21	SRWB-3CP2-A	Total/NA	Solid	1631B CAR Prep	
350-1559-22	SRWB-3D2-A	Total/NA	Solid	1631B CAR Prep	
350-1559-23	SRWB-4B2-A	Total/NA	Solid	1631B CAR Prep	
MB 350-5298/1-A	Method Blank	Total/NA	Solid	1631B CAR Prep	
MB 350-5298/2-A	Method Blank	Total/NA	Solid	1631B CAR Prep	
MB 350-5298/3-A	Method Blank	Total/NA	Solid	1631B CAR Prep	
LCS 350-5298/4-A	Lab Control Sample	Total/NA	Solid	1631B CAR Prep	
LCSD 350-5298/5-A	Lab Control Sample Dup	Total/NA	Solid	1631B CAR Prep	
350-1559-10 MS	SRWA-1B2X-A	Total/NA	Solid	1631B CAR Prep	
350-1559-10 MSD	SRWA-1B2X-A	Total/NA	Solid	1631B CAR Prep	
350-1559-17 MS	SRWB-1D2-A	Total/NA	Solid	1631B CAR Prep	
350-1559-17 MSD	SRWB-1D2-A	Total/NA	Solid	1631B CAR Prep	

Analysis Batch: 5338

Lab Sample ID	Client Sample ID	Prep Type	Matrix	Method	Prep Batch
350-1559-10	SRWA-1B2X-A	Total/NA	Solid	1638	5206
350-1559-11	SRWA-2B2X-A	Total/NA	Solid	1638	5206
350-1559-12	SRWA-2B2X-A-FD	Total/NA	Solid	1638	5206
350-1559-13	SRWA-3B2X-A	Total/NA	Solid	1638	5206
350-1559-14	SRWA-4B2X-A	Total/NA	Solid	1638	5206
MB 350-5206/1-A	Method Blank	Total/NA	Solid	1638	5206
MB 350-5206/2-A	Method Blank	Total/NA	Solid	1638	5206
LCS 350-5206/3-A	Lab Control Sample	Total/NA	Solid	1638	5206
LCSD 350-5206/4-A	Lab Control Sample Dup	Total/NA	Solid	1638	5206

Analysis Batch: 5384

Lab Sample ID	Client Sample ID	Prep Type	Matrix	Method	Prep Batch
350-1559-1	SRWB-1CP2-SW-1	Total/NA	Water	1631E	
350-1559-7	SRWB-3CP2-SW-20	Total/NA	Water	1631E	
350-1559-8	SRWB-3CP2-SW-40	Total/NA	Water	1631E	
MB 350-5384/17	Method Blank	Total/NA	Water	1631E	
MB 350-5384/18	Method Blank	Total/NA	Water	1631E	
MB 350-5384/19	Method Blank	Total/NA	Water	1631E	
LCS 350-5384/28	Lab Control Sample	Total/NA	Water	1631E	
LCSD 350-5384/29	Lab Control Sample Dup	Total/NA	Water	1631E	
350-1559-1 MS	SRWB-1CP2-SW-1	Total/NA	Water	1631E	
350-1559-1 MSD	SRWB-1CP2-SW-1	Total/NA	Water	1631E	
350-1559-8 MS	SRWB-3CP2-SW-40	Total/NA	Water	1631E	
350-1559-8 MSD	SRWB-3CP2-SW-40	Total/NA	Water	1631E	

Metals

Analysis Batch: 5476

Lab Sample ID	Client Sample ID	Prep Type	Matrix	Method	Prep Batch
350-1559-2	SRWB-1CP2-SW-20	Total/NA	Water	1631E	
350-1559-3	SRWB-1CP2-SW-40	Total/NA	Water	1631E	
350-1559-4	SRWB-1CP2-SW-40-FD	Total/NA	Water	1631E	
350-1559-5	SRWB-1CP2-SW-B	Total/NA	Water	1631E	
350-1559-6	SRWB-3CP2-SW-1	Total/NA	Water	1631E	
350-1559-9	SRWB-3CP2-SW-B	Total/NA	Water	1631E	
MB 350-5476/31	Method Blank	Total/NA	Water	1631E	
MB 350-5476/34	Method Blank	Total/NA	Water	1631E	
MB 350-5476/35	Method Blank	Total/NA	Water	1631E	
LCS 350-5476/42	Lab Control Sample	Total/NA	Water	1631E	
LCSD 350-5476/43	Lab Control Sample Dup	Total/NA	Water	1631E	

Analysis Batch: 5615

Lab Sample ID	Client Sample ID	Prep Type	Matrix	Method	Prep Batch
350-1559-146	SRWB-WB	Total/NA	Water	1631E	
350-1559-147	SRWB-EQ	Total/NA	Water	1631E	
MB 350-5615/20	Method Blank	Total/NA	Water	1631E	
MB 350-5615/23	Method Blank	Total/NA	Water	1631E	
MB 350-5615/24	Method Blank	Total/NA	Water	1631E	
LCS 350-5615/30	Lab Control Sample	Total/NA	Water	1631E	
LCSD 350-5615/31	Lab Control Sample Dup	Total/NA	Water	1631E	

Analysis Batch: 5683

Lab Sample ID	Client Sample ID	Prep Type	Matrix	Method	Prep Batch
350-1559-10	SRWA-1B2X-A	Total/NA	Solid	1631B	5298
350-1559-11	SRWA-2B2X-A	Total/NA	Solid	1631B	5298
350-1559-12	SRWA-2B2X-A-FD	Total/NA	Solid	1631B	5298
350-1559-13	SRWA-3B2X-A	Total/NA	Solid	1631B	5298
350-1559-14	SRWA-4B2X-A	Total/NA	Solid	1631B	5298
350-1559-15	SRWB-1B2-A	Total/NA	Solid	1631B	5298
350-1559-16	SRWB-1CP2-A	Total/NA	Solid	1631B	5298
350-1559-17	SRWB-1D2-A	Total/NA	Solid	1631B	5298
350-1559-18	SRWB-2B2X-A	Total/NA	Solid	1631B	5298
350-1559-19	SRWB-2B2X-A-FD	Total/NA	Solid	1631B	5298
350-1559-20	SRWB-3B2-A	Total/NA	Solid	1631B	5298
350-1559-21	SRWB-3CP2-A	Total/NA	Solid	1631B	5298
350-1559-22	SRWB-3D2-A	Total/NA	Solid	1631B	5298
350-1559-23	SRWB-4B2-A	Total/NA	Solid	1631B	5298
MB 350-5298/1-A	Method Blank	Total/NA	Solid	1631B	5298
MB 350-5298/2-A	Method Blank	Total/NA	Solid	1631B	5298
MB 350-5298/3-A	Method Blank	Total/NA	Solid	1631B	5298
LCS 350-5298/4-A	Lab Control Sample	Total/NA	Solid	1631B	5298
LCSD 350-5298/5-A	Lab Control Sample Dup	Total/NA	Solid	1631B	5298
350-1559-10 MS	SRWA-1B2X-A	Total/NA	Solid	1631B	5298
350-1559-10 MSD	SRWA-1B2X-A	Total/NA	Solid	1631B	5298
350-1559-17 MS	SRWB-1D2-A	Total/NA	Solid	1631B	5298
350-1559-17 MSD	SRWB-1D2-A	Total/NA	Solid	1631B	5298

Prep Batch: 6089

Lab Sample ID	Client Sample ID	Prep Type	Matrix	Method	Prep Batch
350-1559-146	SRWB-WB	Total/NA	Water	1640	

Metals (Continued)

Prep Batch: 6089 (Continued)

Lab Sample ID	Client Sample ID	Prep Type	Matrix	Method	Prep Batch
350-1559-147	SRWB-EQ	Total/NA	Water	1640	
MB 350-6089/1-A	Method Blank	Total/NA	Water	1640	
MB 350-6089/2-A	Method Blank	Total/NA	Water	1640	
LCS 350-6089/3-A	Lab Control Sample	Total/NA	Water	1640	
LCSD 350-6089/4-A	Lab Control Sample Dup	Total/NA	Water	1640	

Analysis Batch: 6254

Lab Sample ID	Client Sample ID	Prep Type	Matrix	Method	Prep Batch
350-1559-146	SRWB-WB	Total/NA	Water	1640	6089
350-1559-147	SRWB-EQ	Total/NA	Water	1640	6089
MB 350-6089/1-A	Method Blank	Total/NA	Water	1640	6089
MB 350-6089/2-A	Method Blank	Total/NA	Water	1640	6089
LCS 350-6089/3-A	Lab Control Sample	Total/NA	Water	1640	6089
LCSD 350-6089/4-A	Lab Control Sample Dup	Total/NA	Water	1640	6089

Analysis Batch: 6294

Lab Sample ID	Client Sample ID	Prep Type	Matrix	Method	Prep Batch
350-1559-15	SRWB-1B2-A	Total/NA	Solid	1638	5226
350-1559-16	SRWB-1CP2-A	Total/NA	Solid	1638	5226
350-1559-17	SRWB-1D2-A	Total/NA	Solid	1638	5226
350-1559-18	SRWB-2B2X-A	Total/NA	Solid	1638	5226
350-1559-19	SRWB-2B2X-A-FD	Total/NA	Solid	1638	5226
350-1559-20	SRWB-3B2-A	Total/NA	Solid	1638	5226
350-1559-21	SRWB-3CP2-A	Total/NA	Solid	1638	5226
350-1559-22	SRWB-3D2-A	Total/NA	Solid	1638	5226
350-1559-23	SRWB-4B2-A	Total/NA	Solid	1638	5226
MB 350-5226/1-A	Method Blank	Total/NA	Solid	1638	5226
MB 350-5226/2-A	Method Blank	Total/NA	Solid	1638	5226
LCS 350-5226/3-A	Lab Control Sample	Total/NA	Solid	1638	5226
LCSD 350-5226/4-A	Lab Control Sample Dup	Total/NA	Solid	1638	5226
350-1559-21 MS	SRWB-3CP2-A	Total/NA	Solid	1638	5226
350-1559-21 MSD	SRWB-3CP2-A	Total/NA	Solid	1638	5226

Analysis Batch: 6354

Lab Sample ID	Client Sample ID	Prep Type	Matrix	Method	Prep Batch
350-1559-10	SRWA-1B2X-A	Total/NA	Solid	1638	5206
350-1559-11	SRWA-2B2X-A	Total/NA	Solid	1638	5206
350-1559-12	SRWA-2B2X-A-FD	Total/NA	Solid	1638	5206
350-1559-13	SRWA-3B2X-A	Total/NA	Solid	1638	5206
350-1559-14	SRWA-4B2X-A	Total/NA	Solid	1638	5206
MB 350-5206/1-A	Method Blank	Total/NA	Solid	1638	5206
MB 350-5206/2-A	Method Blank	Total/NA	Solid	1638	5206
LCS 350-5206/3-A	Lab Control Sample	Total/NA	Solid	1638	5206
LCSD 350-5206/4-A	Lab Control Sample Dup	Total/NA	Solid	1638	5206

Analysis Batch: 6355

Lab Sample ID	Client Sample ID	Prep Type	Matrix	Method	Prep Batch
350-1559-22	SRWB-3D2-A	Total/NA	Solid	1638	5226

QC Association Summary

Client: Tetra Tech Inc
Project/Site: Gulf of Thailand - 2025

Job ID: 350-1559-1

General Chemistry

Analysis Batch: 5308

Lab Sample ID	Client Sample ID	Prep Type	Matrix	Method	Prep Batch
350-1559-10	SRWA-1B2X-A	Total/NA	Solid	Moisture - 2540	
350-1559-11	SRWA-2B2X-A	Total/NA	Solid	Moisture - 2540	
350-1559-12	SRWA-2B2X-A-FD	Total/NA	Solid	Moisture - 2540	
350-1559-13	SRWA-3B2X-A	Total/NA	Solid	Moisture - 2540	
350-1559-14	SRWA-4B2X-A	Total/NA	Solid	Moisture - 2540	
350-1559-15	SRWB-1B2-A	Total/NA	Solid	Moisture - 2540	
350-1559-16	SRWB-1CP2-A	Total/NA	Solid	Moisture - 2540	
350-1559-17	SRWB-1D2-A	Total/NA	Solid	Moisture - 2540	
350-1559-18	SRWB-2B2X-A	Total/NA	Solid	Moisture - 2540	
350-1559-19	SRWB-2B2X-A-FD	Total/NA	Solid	Moisture - 2540	
350-1559-20	SRWB-3B2-A	Total/NA	Solid	Moisture - 2540	
350-1559-21	SRWB-3CP2-A	Total/NA	Solid	Moisture - 2540	
350-1559-22	SRWB-3D2-A	Total/NA	Solid	Moisture - 2540	
350-1559-23	SRWB-4B2-A	Total/NA	Solid	Moisture - 2540	
350-1559-10 DU	SRWA-1B2X-A	Total/NA	Solid	Moisture - 2540	

Lab Chronicle

Client: Tetra Tech Inc
Project/Site: Gulf of Thailand - 2025

Job ID: 350-1559-1

Client Sample ID: SRWB-1CP2-SW-1
Lab Sample ID: 350-1559-1
Date Collected: 02/09/25 01:06
Matrix: Water
Date Received: 02/19/25 15:15

Prep Type	Batch Type	Batch Method	Run	Dilution Factor	Batch Number	Analyst	Lab	Prepared or Analyzed
Total/NA	Analysis	1631E		1	5384	AJD	EET SSM	03/04/25 14:51
Total/NA	Prep	1640			5184	COW	EET SSM	02/24/25 13:30
Total/NA	Analysis	1640		1	5238	COW	EET SSM	02/25/25 04:48

Client Sample ID: SRWB-1CP2-SW-20
Lab Sample ID: 350-1559-2
Date Collected: 02/09/25 01:12
Matrix: Water
Date Received: 02/19/25 15:15

Prep Type	Batch Type	Batch Method	Run	Dilution Factor	Batch Number	Analyst	Lab	Prepared or Analyzed
Total/NA	Analysis	1631E		1	5476	AJD	EET SSM	03/10/25 21:20
Total/NA	Prep	1640			5184	COW	EET SSM	02/24/25 13:30
Total/NA	Analysis	1640		1	5238	COW	EET SSM	02/25/25 05:58

Client Sample ID: SRWB-1CP2-SW-40
Lab Sample ID: 350-1559-3
Date Collected: 02/09/25 01:20
Matrix: Water
Date Received: 02/19/25 15:15

Prep Type	Batch Type	Batch Method	Run	Dilution Factor	Batch Number	Analyst	Lab	Prepared or Analyzed
Total/NA	Analysis	1631E		1	5476	AJD	EET SSM	03/10/25 21:24
Total/NA	Prep	1640			5184	COW	EET SSM	02/24/25 13:30
Total/NA	Analysis	1640		1	5238	COW	EET SSM	02/25/25 13:00

Client Sample ID: SRWB-1CP2-SW-40-FD
Lab Sample ID: 350-1559-4
Date Collected: 02/09/25 01:30
Matrix: Water
Date Received: 02/19/25 15:15

Prep Type	Batch Type	Batch Method	Run	Dilution Factor	Batch Number	Analyst	Lab	Prepared or Analyzed
Total/NA	Analysis	1631E		1	5476	AJD	EET SSM	03/10/25 21:28
Total/NA	Prep	1640			5184	COW	EET SSM	02/24/25 13:30
Total/NA	Analysis	1640		1	5238	COW	EET SSM	02/25/25 13:14

Client Sample ID: SRWB-1CP2-SW-B
Lab Sample ID: 350-1559-5
Date Collected: 02/09/25 01:41
Matrix: Water
Date Received: 02/19/25 15:15

Prep Type	Batch Type	Batch Method	Run	Dilution Factor	Batch Number	Analyst	Lab	Prepared or Analyzed
Total/NA	Analysis	1631E		1	5476	AJD	EET SSM	03/10/25 21:32
Total/NA	Prep	1640			5184	COW	EET SSM	02/24/25 13:30
Total/NA	Analysis	1640		1	5238	COW	EET SSM	02/25/25 13:57

Client Sample ID: SRWB-3CP2-SW-1
Lab Sample ID: 350-1559-6
Date Collected: 02/09/25 02:40
Matrix: Water
Date Received: 02/19/25 15:15

Prep Type	Batch Type	Batch Method	Run	Dilution Factor	Batch Number	Analyst	Lab	Prepared or Analyzed
Total/NA	Analysis	1631E		1	5476	AJD	EET SSM	03/10/25 21:36

Lab Chronicle

Client: Tetra Tech Inc
Project/Site: Gulf of Thailand - 2025

Job ID: 350-1559-1

Client Sample ID: SRWB-3CP2-SW-1 — Lab Sample ID: 350-1559-6

Date Collected: 02/09/25 02:40 — **Matrix: Water**
Date Received: 02/19/25 15:15

Prep Type	Batch Type	Batch Method	Run	Dilution Factor	Batch Number	Analyst	Lab	Prepared or Analyzed
Total/NA	Prep	1640			5184	COW	EET SSM	02/24/25 13:30
Total/NA	Analysis	1640		1	5238	COW	EET SSM	02/25/25 14:11

Client Sample ID: SRWB-3CP2-SW-20 — Lab Sample ID: 350-1559-7

Date Collected: 02/09/25 02:46 — **Matrix: Water**
Date Received: 02/19/25 15:15

Prep Type	Batch Type	Batch Method	Run	Dilution Factor	Batch Number	Analyst	Lab	Prepared or Analyzed
Total/NA	Analysis	1631E		1	5384	AJD	EET SSM	03/04/25 15:07
Total/NA	Prep	1640			5184	COW	EET SSM	02/24/25 13:30
Total/NA	Analysis	1640		1	5238	COW	EET SSM	02/25/25 14:25

Client Sample ID: SRWB-3CP2-SW-40 — Lab Sample ID: 350-1559-8

Date Collected: 02/09/25 02:54 — **Matrix: Water**
Date Received: 02/19/25 15:15

Prep Type	Batch Type	Batch Method	Run	Dilution Factor	Batch Number	Analyst	Lab	Prepared or Analyzed
Total/NA	Analysis	1631E		1	5384	AJD	EET SSM	03/04/25 14:55
Total/NA	Prep	1640			5184	COW	EET SSM	02/24/25 13:30
Total/NA	Analysis	1640		1	5238	COW	EET SSM	02/25/25 14:39

Client Sample ID: SRWB-3CP2-SW-B — Lab Sample ID: 350-1559-9

Date Collected: 02/09/25 03:06 — **Matrix: Water**
Date Received: 02/19/25 15:15

Prep Type	Batch Type	Batch Method	Run	Dilution Factor	Batch Number	Analyst	Lab	Prepared or Analyzed
Total/NA	Analysis	1631E		1	5476	AJD	EET SSM	03/10/25 21:40
Total/NA	Prep	1640			5184	COW	EET SSM	02/24/25 13:30
Total/NA	Analysis	1640		1	5238	COW	EET SSM	02/25/25 14:53

Client Sample ID: SRWA-1B2X-A — Lab Sample ID: 350-1559-10

Date Collected: 02/08/25 19:36 — **Matrix: Solid**
Date Received: 02/19/25 15:15

Prep Type	Batch Type	Batch Method	Run	Dilution Factor	Batch Number	Analyst	Lab	Prepared or Analyzed
Total/NA	Analysis	Moisture - 2540		1	5308	D1C	EET SSM	03/03/25 16:34

Client Sample ID: SRWA-1B2X-A — Lab Sample ID: 350-1559-10

Date Collected: 02/08/25 19:36 — **Matrix: Solid**
Date Received: 02/19/25 15:15 — **Percent Solids: 58.2**

Prep Type	Batch Type	Batch Method	Run	Dilution Factor	Batch Number	Analyst	Lab	Prepared or Analyzed
Total/NA	Prep	1631B CAR Prep			5298		EET SSM	03/03/25 17:34
Total/NA	Analysis	1631B		50	5683	COW	EET SSM	03/19/25 10:28
Total/NA	Prep	HF Bomb Prep			5206		EET SSM	02/25/25 18:24
Total/NA	Analysis	1638		1	5338	V1R	EET SSM	03/03/25 15:48

Lab Chronicle

Client: Tetra Tech Inc
Project/Site: Gulf of Thailand - 2025

Job ID: 350-1559-1

Client Sample ID: SRWA-1B2X-A
Lab Sample ID: 350-1559-10
Date Collected: 02/08/25 19:36
Matrix: Solid
Date Received: 02/19/25 15:15
Percent Solids: 58.2

Prep Type	Batch Type	Batch Method	Run	Dilution Factor	Batch Number	Analyst	Lab	Prepared or Analyzed
Total/NA	Prep	HF Bomb Prep			5206		EET SSM	02/25/25 18:24
Total/NA	Analysis	1638		1	6354	V1R	EET SSM	03/03/25 15:48

Client Sample ID: SRWA-2B2X-A
Lab Sample ID: 350-1559-11
Date Collected: 02/08/25 20:18
Matrix: Solid
Date Received: 02/19/25 15:15

Prep Type	Batch Type	Batch Method	Run	Dilution Factor	Batch Number	Analyst	Lab	Prepared or Analyzed
Total/NA	Analysis	Moisture - 2540		1	5308	D1C	EET SSM	03/03/25 16:34

Client Sample ID: SRWA-2B2X-A
Lab Sample ID: 350-1559-11
Date Collected: 02/08/25 20:18
Matrix: Solid
Date Received: 02/19/25 15:15
Percent Solids: 52.8

Prep Type	Batch Type	Batch Method	Run	Dilution Factor	Batch Number	Analyst	Lab	Prepared or Analyzed
Total/NA	Prep	1631B CAR Prep			5298		EET SSM	03/03/25 17:34
Total/NA	Analysis	1631B		20	5683	COW	EET SSM	03/19/25 15:49
Total/NA	Prep	HF Bomb Prep			5206		EET SSM	02/25/25 18:24
Total/NA	Analysis	1638		1	5338	V1R	EET SSM	03/03/25 15:50
Total/NA	Prep	HF Bomb Prep			5206		EET SSM	02/25/25 18:24
Total/NA	Analysis	1638		1	6354	V1R	EET SSM	03/03/25 15:50

Client Sample ID: SRWA-2B2X-A-FD
Lab Sample ID: 350-1559-12
Date Collected: 02/08/25 20:25
Matrix: Solid
Date Received: 02/19/25 15:15

Prep Type	Batch Type	Batch Method	Run	Dilution Factor	Batch Number	Analyst	Lab	Prepared or Analyzed
Total/NA	Analysis	Moisture - 2540		1	5308	D1C	EET SSM	03/03/25 16:34

Client Sample ID: SRWA-2B2X-A-FD
Lab Sample ID: 350-1559-12
Date Collected: 02/08/25 20:25
Matrix: Solid
Date Received: 02/19/25 15:15
Percent Solids: 54.2

Prep Type	Batch Type	Batch Method	Run	Dilution Factor	Batch Number	Analyst	Lab	Prepared or Analyzed
Total/NA	Prep	1631B CAR Prep			5298		EET SSM	03/03/25 17:34
Total/NA	Analysis	1631B		20	5683	COW	EET SSM	03/19/25 15:53
Total/NA	Prep	HF Bomb Prep			5206		EET SSM	02/25/25 18:24
Total/NA	Analysis	1638		1	5338	V1R	EET SSM	03/03/25 15:52
Total/NA	Prep	HF Bomb Prep			5206		EET SSM	02/25/25 18:24
Total/NA	Analysis	1638		1	6354	V1R	EET SSM	03/03/25 15:52

Lab Chronicle

Client: Tetra Tech Inc
Project/Site: Gulf of Thailand - 2025

Job ID: 350-1559-1

Client Sample ID: SRWA-3B2X-A
Lab Sample ID: 350-1559-13
Date Collected: 02/08/25 20:50
Matrix: Solid
Date Received: 02/19/25 15:15

Prep Type	Batch Type	Batch Method	Run	Dilution Factor	Batch Number	Analyst	Lab	Prepared or Analyzed
Total/NA	Analysis	Moisture - 2540		1	5308	D1C	EET SSM	03/03/25 16:34

Client Sample ID: SRWA-3B2X-A
Lab Sample ID: 350-1559-13
Date Collected: 02/08/25 20:50
Matrix: Solid
Date Received: 02/19/25 15:15
Percent Solids: 55.9

Prep Type	Batch Type	Batch Method	Run	Dilution Factor	Batch Number	Analyst	Lab	Prepared or Analyzed
Total/NA	Prep	1631B CAR Prep			5298		EET SSM	03/03/25 17:34
Total/NA	Analysis	1631B		20	5683	COW	EET SSM	03/19/25 15:57
Total/NA	Prep	HF Bomb Prep			5206		EET SSM	02/25/25 18:24
Total/NA	Analysis	1638		1	5338	V1R	EET SSM	03/03/25 15:54
Total/NA	Prep	HF Bomb Prep			5206		EET SSM	02/25/25 18:24
Total/NA	Analysis	1638		1	6354	V1R	EET SSM	03/03/25 15:54

Client Sample ID: SRWA-4B2X-A
Lab Sample ID: 350-1559-14
Date Collected: 02/08/25 21:21
Matrix: Solid
Date Received: 02/19/25 15:15

Prep Type	Batch Type	Batch Method	Run	Dilution Factor	Batch Number	Analyst	Lab	Prepared or Analyzed
Total/NA	Analysis	Moisture - 2540		1	5308	D1C	EET SSM	03/03/25 16:34

Client Sample ID: SRWA-4B2X-A
Lab Sample ID: 350-1559-14
Date Collected: 02/08/25 21:21
Matrix: Solid
Date Received: 02/19/25 15:15
Percent Solids: 53.8

Prep Type	Batch Type	Batch Method	Run	Dilution Factor	Batch Number	Analyst	Lab	Prepared or Analyzed
Total/NA	Prep	1631B CAR Prep			5298		EET SSM	03/03/25 17:34
Total/NA	Analysis	1631B		20	5683	COW	EET SSM	03/19/25 16:01
Total/NA	Prep	HF Bomb Prep			5206		EET SSM	02/25/25 18:24
Total/NA	Analysis	1638		1	5338	V1R	EET SSM	03/03/25 15:56
Total/NA	Prep	HF Bomb Prep			5206		EET SSM	02/25/25 18:24
Total/NA	Analysis	1638		1	6354	V1R	EET SSM	03/03/25 15:56

Client Sample ID: SRWB-1B2-A
Lab Sample ID: 350-1559-15
Date Collected: 02/09/25 17:30
Matrix: Solid
Date Received: 02/19/25 15:15

Prep Type	Batch Type	Batch Method	Run	Dilution Factor	Batch Number	Analyst	Lab	Prepared or Analyzed
Total/NA	Analysis	Moisture - 2540		1	5308	D1C	EET SSM	03/03/25 16:34

Lab Chronicle

Client: Tetra Tech Inc
Project/Site: Gulf of Thailand - 2025

Job ID: 350-1559-1

Client Sample ID: SRWB-1B2-A — Lab Sample ID: 350-1559-15

Date Collected: 02/09/25 17:30 — **Matrix: Solid**
Date Received: 02/19/25 15:15 — **Percent Solids: 53.5**

Prep Type	Batch Type	Batch Method	Run	Dilution Factor	Batch Number	Analyst	Lab	Prepared or Analyzed
Total/NA	Prep	1631B CAR Prep			5298		EET SSM	03/03/25 17:34
Total/NA	Analysis	1631B		50	5683	COW	EET SSM	03/19/25 11:26
Total/NA	Prep	HF Bomb Prep			5226		EET SSM	02/26/25 16:22
Total/NA	Analysis	1638		1	6294	COW	EET SSM	04/17/25 21:46

Client Sample ID: SRWB-1CP2-A — Lab Sample ID: 350-1559-16

Date Collected: 02/09/25 16:56 — **Matrix: Solid**
Date Received: 02/19/25 15:15

Prep Type	Batch Type	Batch Method	Run	Dilution Factor	Batch Number	Analyst	Lab	Prepared or Analyzed
Total/NA	Analysis	Moisture - 2540		1	5308	D1C	EET SSM	03/03/25 16:34

Client Sample ID: SRWB-1CP2-A — Lab Sample ID: 350-1559-16

Date Collected: 02/09/25 16:56 — **Matrix: Solid**
Date Received: 02/19/25 15:15 — **Percent Solids: 50.3**

Prep Type	Batch Type	Batch Method	Run	Dilution Factor	Batch Number	Analyst	Lab	Prepared or Analyzed
Total/NA	Prep	1631B CAR Prep			5298		EET SSM	03/03/25 17:34
Total/NA	Analysis	1631B		20	5683	COW	EET SSM	03/19/25 16:22
Total/NA	Prep	HF Bomb Prep			5226		EET SSM	02/26/25 16:22
Total/NA	Analysis	1638		1	6294	COW	EET SSM	04/17/25 21:49

Client Sample ID: SRWB-1D2-A — Lab Sample ID: 350-1559-17

Date Collected: 02/09/25 16:08 — **Matrix: Solid**
Date Received: 02/19/25 15:15

Prep Type	Batch Type	Batch Method	Run	Dilution Factor	Batch Number	Analyst	Lab	Prepared or Analyzed
Total/NA	Analysis	Moisture - 2540		1	5308	D1C	EET SSM	03/03/25 16:34

Client Sample ID: SRWB-1D2-A — Lab Sample ID: 350-1559-17

Date Collected: 02/09/25 16:08 — **Matrix: Solid**
Date Received: 02/19/25 15:15 — **Percent Solids: 49.1**

Prep Type	Batch Type	Batch Method	Run	Dilution Factor	Batch Number	Analyst	Lab	Prepared or Analyzed
Total/NA	Prep	1631B CAR Prep			5298		EET SSM	03/03/25 17:34
Total/NA	Analysis	1631B		50	5683	COW	EET SSM	03/19/25 10:48
Total/NA	Prep	HF Bomb Prep			5226		EET SSM	02/26/25 16:22
Total/NA	Analysis	1638		1	6294	COW	EET SSM	04/17/25 21:51

Client Sample ID: SRWB-2B2X-A — Lab Sample ID: 350-1559-18

Date Collected: 02/09/25 18:03 — **Matrix: Solid**
Date Received: 02/19/25 15:15

Prep Type	Batch Type	Batch Method	Run	Dilution Factor	Batch Number	Analyst	Lab	Prepared or Analyzed
Total/NA	Analysis	Moisture - 2540		1	5308	D1C	EET SSM	03/03/25 16:34

Lab Chronicle

Client: Tetra Tech Inc
Project/Site: Gulf of Thailand - 2025

Job ID: 350-1559-1

Client Sample ID: SRWB-2B2X-A
Lab Sample ID: 350-1559-18
Date Collected: 02/09/25 18:03
Matrix: Solid
Date Received: 02/19/25 15:15
Percent Solids: 50.1

Prep Type	Batch Type	Batch Method	Run	Dilution Factor	Batch Number	Analyst	Lab	Prepared or Analyzed
Total/NA	Prep	1631B CAR Prep			5298		EET SSM	03/03/25 17:34
Total/NA	Analysis	1631B		20	5683	COW	EET SSM	03/19/25 16:26
Total/NA	Prep	HF Bomb Prep			5226		EET SSM	02/26/25 16:22
Total/NA	Analysis	1638		1	6294	COW	EET SSM	04/17/25 21:54

Client Sample ID: SRWB-2B2X-A-FD
Lab Sample ID: 350-1559-19
Date Collected: 02/09/25 18:11
Matrix: Solid
Date Received: 02/19/25 15:15

Prep Type	Batch Type	Batch Method	Run	Dilution Factor	Batch Number	Analyst	Lab	Prepared or Analyzed
Total/NA	Analysis	Moisture - 2540		1	5308	D1C	EET SSM	03/03/25 16:34

Client Sample ID: SRWB-2B2X-A-FD
Lab Sample ID: 350-1559-19
Date Collected: 02/09/25 18:11
Matrix: Solid
Date Received: 02/19/25 15:15
Percent Solids: 44.5

Prep Type	Batch Type	Batch Method	Run	Dilution Factor	Batch Number	Analyst	Lab	Prepared or Analyzed
Total/NA	Prep	1631B CAR Prep			5298		EET SSM	03/03/25 17:34
Total/NA	Analysis	1631B		50	5683	COW	EET SSM	03/19/25 11:38
Total/NA	Prep	HF Bomb Prep			5226		EET SSM	02/26/25 16:22
Total/NA	Analysis	1638		1	6294	COW	EET SSM	04/17/25 21:56

Client Sample ID: SRWB-3B2-A
Lab Sample ID: 350-1559-20
Date Collected: 02/09/25 06:33
Matrix: Solid
Date Received: 02/19/25 15:15

Prep Type	Batch Type	Batch Method	Run	Dilution Factor	Batch Number	Analyst	Lab	Prepared or Analyzed
Total/NA	Analysis	Moisture - 2540		1	5308	D1C	EET SSM	03/03/25 16:34

Client Sample ID: SRWB-3B2-A
Lab Sample ID: 350-1559-20
Date Collected: 02/09/25 06:33
Matrix: Solid
Date Received: 02/19/25 15:15
Percent Solids: 60.4

Prep Type	Batch Type	Batch Method	Run	Dilution Factor	Batch Number	Analyst	Lab	Prepared or Analyzed
Total/NA	Prep	1631B CAR Prep			5298		EET SSM	03/03/25 17:34
Total/NA	Analysis	1631B		200	5683	COW	EET SSM	03/19/25 16:30
Total/NA	Prep	HF Bomb Prep			5226		EET SSM	02/26/25 16:22
Total/NA	Analysis	1638		1	6294	COW	EET SSM	04/17/25 21:59

Client Sample ID: SRWB-3CP2-A
Lab Sample ID: 350-1559-21
Date Collected: 02/09/25 04:15
Matrix: Solid
Date Received: 02/19/25 15:15

Prep Type	Batch Type	Batch Method	Run	Dilution Factor	Batch Number	Analyst	Lab	Prepared or Analyzed
Total/NA	Analysis	Moisture - 2540		1	5308	D1C	EET SSM	03/03/25 16:34

Lab Chronicle

Client: Tetra Tech Inc
Project/Site: Gulf of Thailand - 2025

Job ID: 350-1559-1

Client Sample ID: SRWB-3CP2-A
Lab Sample ID: 350-1559-21
Date Collected: 02/09/25 04:15
Matrix: Solid
Date Received: 02/19/25 15:15
Percent Solids: 50.4

Prep Type	Batch Type	Batch Method	Run	Dilution Factor	Batch Number	Analyst	Lab	Prepared or Analyzed
Total/NA	Prep	1631B CAR Prep			5298		EET SSM	03/03/25 17:34
Total/NA	Analysis	1631B		20	5683	COW	EET SSM	03/19/25 16:34
Total/NA	Prep	HF Bomb Prep			5226		EET SSM	02/26/25 16:22
Total/NA	Analysis	1638		1	6294	COW	EET SSM	04/17/25 21:25

Client Sample ID: SRWB-3D2-A
Lab Sample ID: 350-1559-22
Date Collected: 02/09/25 05:20
Matrix: Solid
Date Received: 02/19/25 15:15

Prep Type	Batch Type	Batch Method	Run	Dilution Factor	Batch Number	Analyst	Lab	Prepared or Analyzed
Total/NA	Analysis	Moisture - 2540		1	5308	D1C	EET SSM	03/03/25 16:34

Client Sample ID: SRWB-3D2-A
Lab Sample ID: 350-1559-22
Date Collected: 02/09/25 05:20
Matrix: Solid
Date Received: 02/19/25 15:15
Percent Solids: 51.0

Prep Type	Batch Type	Batch Method	Run	Dilution Factor	Batch Number	Analyst	Lab	Prepared or Analyzed
Total/NA	Prep	1631B CAR Prep			5298		EET SSM	03/03/25 17:34
Total/NA	Analysis	1631B		20	5683	COW	EET SSM	03/19/25 16:38
Total/NA	Prep	HF Bomb Prep			5226		EET SSM	02/26/25 16:22
Total/NA	Analysis	1638		1	6294	COW	EET SSM	04/17/25 22:02
Total/NA	Prep	HF Bomb Prep			5226		EET SSM	02/26/25 16:22
Total/NA	Analysis	1638		10	6355	COW	EET SSM	04/21/25 19:07

Client Sample ID: SRWB-4B2-A
Lab Sample ID: 350-1559-23
Date Collected: 02/09/25 05:47
Matrix: Solid
Date Received: 02/19/25 15:15

Prep Type	Batch Type	Batch Method	Run	Dilution Factor	Batch Number	Analyst	Lab	Prepared or Analyzed
Total/NA	Analysis	Moisture - 2540		1	5308	D1C	EET SSM	03/03/25 16:34

Client Sample ID: SRWB-4B2-A
Lab Sample ID: 350-1559-23
Date Collected: 02/09/25 05:47
Matrix: Solid
Date Received: 02/19/25 15:15
Percent Solids: 52.2

Prep Type	Batch Type	Batch Method	Run	Dilution Factor	Batch Number	Analyst	Lab	Prepared or Analyzed
Total/NA	Prep	1631B CAR Prep			5298		EET SSM	03/03/25 17:34
Total/NA	Analysis	1631B		20	5683	COW	EET SSM	03/19/25 16:42
Total/NA	Prep	HF Bomb Prep			5226		EET SSM	02/26/25 16:22
Total/NA	Analysis	1638		1	6294	COW	EET SSM	04/17/25 22:04

Lab Chronicle

Client: Tetra Tech Inc
Project/Site: Gulf of Thailand - 2025

Job ID: 350-1559-1

Client Sample ID: SRWB-WB

Lab Sample ID: 350-1559-146

Date Collected: 02/09/25 12:35
Matrix: Water
Date Received: 02/19/25 15:15

Prep Type	Batch Type	Batch Method	Run	Dilution Factor	Batch Number	Analyst	Lab	Prepared or Analyzed
Total/NA	Analysis	1631E		1	5615	AJD	EET SSM	03/17/25 22:52
Total/NA	Prep	1640			5188	COW	EET SSM	02/24/25 13:40
Total/NA	Analysis	1640		1	5238	COW	EET SSM	02/26/25 01:55
Total/NA	Prep	1640			6089	COW	EET SSM	04/08/25 15:53
Total/NA	Analysis	1640		1	6254	COW	EET SSM	04/09/25 12:04

Client Sample ID: SRWB-EQ

Lab Sample ID: 350-1559-147

Date Collected: 02/09/25 12:40
Matrix: Water
Date Received: 02/19/25 15:15

Prep Type	Batch Type	Batch Method	Run	Dilution Factor	Batch Number	Analyst	Lab	Prepared or Analyzed
Total/NA	Analysis	1631E		1	5615	AJD	EET SSM	03/17/25 22:56
Total/NA	Prep	1640			5188	COW	EET SSM	02/24/25 13:40
Total/NA	Analysis	1640		1	5238	COW	EET SSM	02/26/25 02:09
Total/NA	Prep	1640			6089	COW	EET SSM	04/08/25 15:53
Total/NA	Analysis	1640		1	6254	COW	EET SSM	04/09/25 12:19

Laboratory References:

EET SSM = Eurofins Seattle Specialty Metals, 5755 8th Street East, Tacoma, WA 98424, TEL (253)922-2310

Accreditation/Certification Summary

Client: Tetra Tech Inc
Project/Site: Gulf of Thailand - 2025

Job ID: 350-1559-1

Laboratory: Eurofins Seattle Specialty Metals

All accreditations/certifications held by this laboratory are listed. Not all accreditations/certifications are applicable to this report.

Authority	Program	Identification Number	Expiration Date
Alaska (UST)	State	20-004	02-19-27
ANAB	Dept. of Defense ELAP	L2236	01-19-27
ANAB	Dept. of Energy	L2236.01	01-19-27
ANAB	ISO/IEC 17025	L2236	01-19-27
California	State	2954	07-07-25
Florida	NELAP	E87575	06-30-25
Louisiana (All)	NELAP	03073	06-30-25
Maine	State	WA01273	05-02-26
New Jersey	NELAP	WA014	06-30-25
New York	NELAP	11662	04-01-26
Oregon	NELAP	4167-008	07-07-25
US Fish & Wildlife	US Federal Programs	A20571	06-30-25
USDA	US Federal Programs	525-23-4-22573	01-04-26
Washington	State	C788-23a	07-13-25
Wisconsin	State	399133460	07-31-25

Method Summary

Client: Tetra Tech Inc
Project/Site: Gulf of Thailand - 2025

Job ID: 350-1559-1

Method	Method Description	Protocol	Laboratory
1631B	Mercury, Low Level (CVAFS)	EPA	EET SSM
1631E	Mercury, Low Level (CVAFS)	EPA	EET SSM
1638	Metals (ICP/MS)	EPA	EET SSM
1640	Metals (ICPMS)	EPA	EET SSM
Moisture - 2540	Percent Moisture	SM	EET SSM
1631B CAR Prep	Preparation of Solids, Modified Cold Aqua-Regia	Lab SOP	EET SSM
1640	Preparation, Total Recoverable Metals	EPA	EET SSM
HF Bomb Prep	HF/HNO3/ HCl Bomb Digestion of Solids for Total Metals	Lab SOP	EET SSM

Protocol References:

EPA = US Environmental Protection Agency
Lab SOP = Laboratory Standard Operating Procedure
SM = "Standard Methods For The Examination Of Water And Wastewater"

Laboratory References:

EET SSM = Eurofins Seattle Specialty Metals, 5755 8th Street East, Tacoma, WA 98424, TEL (253)922-2310

Sample Summary

Client: Tetra Tech Inc
Project/Site: Gulf of Thailand - 2025

Job ID: 350-1559-1

Lab Sample ID	Client Sample ID	Matrix	Collected	Received
350-1559-1	SRWB-1CP2-SW-1	Water	02/09/25 01:06	02/19/25 15:15
350-1559-2	SRWB-1CP2-SW-20	Water	02/09/25 01:12	02/19/25 15:15
350-1559-3	SRWB-1CP2-SW-40	Water	02/09/25 01:20	02/19/25 15:15
350-1559-4	SRWB-1CP2-SW-40-FD	Water	02/09/25 01:30	02/19/25 15:15
350-1559-5	SRWB-1CP2-SW-B	Water	02/09/25 01:41	02/19/25 15:15
350-1559-6	SRWB-3CP2-SW-1	Water	02/09/25 02:40	02/19/25 15:15
350-1559-7	SRWB-3CP2-SW-20	Water	02/09/25 02:46	02/19/25 15:15
350-1559-8	SRWB-3CP2-SW-40	Water	02/09/25 02:54	02/19/25 15:15
350-1559-9	SRWB-3CP2-SW-B	Water	02/09/25 03:06	02/19/25 15:15
350-1559-10	SRWA-1B2X-A	Solid	02/08/25 19:36	02/19/25 15:15
350-1559-11	SRWA-2B2X-A	Solid	02/08/25 20:18	02/19/25 15:15
350-1559-12	SRWA-2B2X-A-FD	Solid	02/08/25 20:25	02/19/25 15:15
350-1559-13	SRWA-3B2X-A	Solid	02/08/25 20:50	02/19/25 15:15
350-1559-14	SRWA-4B2X-A	Solid	02/08/25 21:21	02/19/25 15:15
350-1559-15	SRWB-1B2-A	Solid	02/09/25 17:30	02/19/25 15:15
350-1559-16	SRWB-1CP2-A	Solid	02/09/25 16:56	02/19/25 15:15
350-1559-17	SRWB-1D2-A	Solid	02/09/25 16:08	02/19/25 15:15
350-1559-18	SRWB-2B2X-A	Solid	02/09/25 18:03	02/19/25 15:15
350-1559-19	SRWB-2B2X-A-FD	Solid	02/09/25 18:11	02/19/25 15:15
350-1559-20	SRWB-3B2-A	Solid	02/09/25 06:33	02/19/25 15:15
350-1559-21	SRWB-3CP2-A	Solid	02/09/25 04:15	02/19/25 15:15
350-1559-22	SRWB-3D2-A	Solid	02/09/25 05:20	02/19/25 15:15
350-1559-23	SRWB-4B2-A	Solid	02/09/25 05:47	02/19/25 15:15
350-1559-146	SRWB-WB	Water	02/09/25 12:35	02/19/25 15:15
350-1559-147	SRWB-EQ	Water	02/09/25 12:40	02/19/25 15:15

eurofins | Environment Testing

Date:	2/21/2025
End Time:	15:10
KI Paper Lot:	N/A
Analyst:	JS

Preservative ID	Preservative Type	Container ID
A	Bromine Monochloride (0.2N)	57151
ZZZZZZZZZZZZZZZZZ	ZZZZZZZZZZZZZZZZZZZZZZZZZ	ZZZZZZZZZZ
ZZZZZZZZZZZZZZZZZ	ZZZZZZZZZZZZZZZZZZZZZZZZZ	ZZZZZZZZZZ
ZZZZZZZZZZZZZZZZZ	ZZZZZZZZZZZZZZZZZZZZZZZZZ	ZZZZZZZZZZ

* MP_HG&5 used for all <5mL pres. additions

Sample ID	Pres. Used (ID)	Oxidized (Y/N)?	Pres. Vol. (mL)/Percent (%)	Comments
350-1559-B-1	A	Y	4.6/2	
350-1559-B-2	A	Y	4.5/2	
350-1559-B-3	A	Y	4.6/2	
350-1559-B-4	A	Y	4.5/2	
350-1559-B-5	A	Y	5/2	
350-1559-B-6	A	Y	4.6/2	
350-1559-B-7	A	Y	5/2	
350-1559-B-8	A	Y	4.5/2	
350-1559-B-9	A	Y	4.5/2	
350-1559-B-24	A	Y	3.6/2	
350-1559-B-25	A	Y	5/2	
350-1559-B-26	A	Y	5/2	
350-1559-B-27	A	Y	5/2	
350-1559-B-28	A	Y	4.6/2	
350-1559-B-29	A	Y	5/2	
350-1559-B-30	A	Y	4.5/2	
350-1559-B-31	A	Y	5/2	
350-1559-B-32	A	Y	5/2	
350-1559-B-33	A	Y	5/2	
350-1559-B-34	A	Y	3/2	
350-1559-B-35	A	Y	5/2	
350-1559-B-36	A	Y	4.5/2	
350-1559-B-37	A	Y	5/2	
350-1559-B-38	A	Y	5/2	
350-1559-B-39	A	Y	5/2	
350-1559-B-40	A	Y	5/2	
350-1559-B-41	A	Y	5/2	
350-1559-B-42	A	Y	5/2	
350-1559-B-43	A	Y	5/2	
350-1559-B-44	A	Y	5/2	
350-1559-B-45	A	Y	5/2	
350-1559-B-46	A	Y	5/2	
350-1559-B-47	A	Y	4.5/2	
350-1559-B-48	A	Y	4.5/2	
350-1559-B-49	A	Y	4.5/2	JS 2/21/25

eurofins | Environment Testing

Date:	2/21/2025
End Time:	15:18
KI Paper Lot:	N/A
Analyst:	JS

Preservative ID	Preservative Type	Container ID
A	Bromine Monochloride (0.2N)	57451
ZZZZZZZZZZZZZZZZ	ZZZZZZZZZZZZZZZZZZZZZZZZ	ZZZZZZZZZZ
ZZZZZZZZZZZZZZZZ	ZZZZZZZZZZZZZZZZZZZZZZZZ	ZZZZZZZZZZ
ZZZZZZZZZZZZZZZZ	ZZZZZZZZZZZZZZZZZZZZZZZZ	ZZZZZZZZZZ

Sample ID	Pres. Used (ID)	Oxidized (Y/N)?	Pres. Vol. (mL)/Percent (%)	Comments
~~350-1559-B-48~~				
~~350-1559-B-49~~			JS 2/21/25	
350-1559-B-50	A	Y	4.6/2	
350-1559-B-117	A	Y	5/2	
350-1559-B-118	A	Y	5/2	
350-1559-B-119	A	Y	5/2	
350-1559-B-120	A	Y	4.6/2	
350-1559-B-121	A	Y	5/2	
350-1559-B-122	A	Y	5/2	
350-1559-B-123	A	Y	5/2	
350-1559-B-124	A	Y	5/2	
350-1559-B-125	A	Y	5/2	
350-1559-B-126	A	Y	3.3/2	
350-1559-B-127	A	Y	3.6/2	
350-1559-B-128	A	Y	4.5/2	
350-1559-B-129	A	Y	5/2	
350-1559-B-130	A	Y	4.6/2	
350-1559-B-131	A	Y	4.6/2	
350-1559-B-146	A	Y	5/2	
350-1559-B-147	A	Y	4.5/2	

JS 2/21/25

* MD_MG05 used for all 25 mL pres. additions

eurofins | Environment Testing

Date:	2/21/2025
End Time:	15:18
pH Paper Lot:	HC411784
Analyst:	JS

Preservative ID	Preservative Type	Container ID
A	Nitric Acid	53675
ZZZZZZZZZZZZZZZZ	ZZZZZZZZZZZZZZZZZZZZZZZZ	ZZZZZZZZZZ
ZZZZZZZZZZZZZZZZ	ZZZZZZZZZZZZZZZZZZZZZZZZ	ZZZZZZZZZZ
ZZZZZZZZZZZZZZZZ	ZZZZZZZZZZZZZZZZZZZZZZZZ	ZZZZZZZZZZ

• MP_TM06 used for all pres. additions

JS 2/21/25

Sample ID	Initial pH	Final pH	Preservative ID	Preservative Added (mL)	Comments
350-1559-A-1	>2	<2	A	562	
350-1559-A-2	>2	<2	A	525	
350-1559-A-3	>2	<2	A	562	
350-1559-A-4	>2	<2	A	625	
350-1559-A-5	>2	<2	A	562	
350-1559-A-6	>2	<2	A	562	
350-1559-A-7	>2	<2	A	562	
350-1559-A-8	>2	<2	A	562	
350-1559-A-9	>2	<2	A	562	
350-1559-A-24	>2	<2	A	~~562~~ 500	
350-1559-A-25	>2	<2	A	625	
350-1559-A-26	>2	<2	A	625	
350-1559-A-27	>2	<2	A	625	
350-1559-A-28	>2	<2	A	625	
350-1559-A-29	>2	<2	A	625	
350-1559-A-30	>2	<2	A	625	
350-1559-A-31	>2	<2	A	625	
350-1559-A-32	>2	<2	A	625	
350-1559-A-33	>2	<2	A	562	
350-1559-A-34	>2	<2	A	437	
350-1559-A-35	>2	<2	A	625	
350-1559-A-36	>2	<2	A	562	
350-1559-A-37	>2	<2	A	625	
350-1559-A-38	>2	<2	A	625	
350-1559-A-39	>2	<2	A	625	
350-1559-A-40	>2	<2	A	625	
350-1559-A-41	>2	<2	A	625	
350-1559-A-42	>2	<2	A	625	
350-1559-A-43	>2	<2	A	625	
350-1559-A-44	>2	<2	A	625	
350-1559-A-45	>2	<2	A	625	
350-1559-A-46	>2	<2	A	625	
350-1559-A-47	>2	<2	A	562	
350-1559-A-48	>2	<2	A	625	
350-1559-A-49	>2	<2	A	562	JS 2/21/25

Login Sample Receipt Checklist

Client: Tetra Tech Inc

Job Number: 350-1559-1

Login Number: 1559
List Number: 1
Creator: LaCount, Lilly-Anna E

List Source: Eurofins Seattle Specialty Metals

Question	Answer	Comment
Radioactivity wasn't checked or is </= background as measured by a survey meter.	N/A	
The cooler's custody seal, if present, is intact.	True	
Sample custody seals, if present, are intact.	True	
The cooler or samples do not appear to have been compromised or tampered with.	True	
Samples were received on ice.	True	
Cooler Temperature is acceptable.	True	
Cooler Temperature is recorded.	True	
COC is present.	True	
COC is filled out in ink and legible.	True	
COC is filled out with all pertinent information.	True	
Is the Field Sampler's name present on COC?	True	
There are no discrepancies between the containers received and the COC.	True	
Samples are received within Holding Time (excluding tests with immediate HTs)	True	
Sample containers have legible labels.	True	
Containers are not broken or leaking.	True	
Sample collection date/times are provided.	True	
Appropriate sample containers are used.	True	
Sample bottles are completely filled.	True	
Sample Preservation Verified.	True	
There is sufficient vol. for all requested analyses, incl. any requested MS/MSDs	True	
Containers requiring zero headspace have no headspace or bubble is <6mm (1/4").	True	
Multiphasic samples are not present.	N/A	
Samples do not require splitting or compositing.	N/A	
Residual Chlorine Checked.	N/A	

This receipt checklist is generated for all samples received in this Login. It may not be applicable to all Jobs associated with this Login.

eurofins | Environment Testing

ANALYTICAL REPORT

PREPARED FOR

Attn: Ted Donn
Tetra Tech Inc
3697 Mt. Diablo Blvd.
Suite 150
Lafayette, California 94549

Generated 5/5/2025 6:17:54 AM

JOB DESCRIPTION

Gulf of Thailand - 2025

JOB NUMBER

350-1619-5

Eurofins Seattle Specialty Metals
5755 8th Street East
Tacoma WA 98424

See page two for job notes and contact information.

my EOL

Eurofins Seattle Specialty Metals

Job Notes

This report may not be reproduced except in full, and with written approval from the laboratory. The results relate only to the samples tested. For questions please contact the Project Manager at the e-mail address or telephone number listed on this page.

The test results in this report relate only to the samples as received by the laboratory and will meet all requirements of the methodology, with any exceptions noted. This report shall not be reproduced except in full, without the express written approval of the laboratory. All questions should be directed to the Eurofins Environment Testing Northwest, LLC Project Manager.

Authorization

Generated
5/5/2025 6:17:54 AM

Authorized for release by
Lilly-Anna LaCount, Project Manager
Lilly-Anna.Lacount@et.eurofinsus.com
(253)922-2310

Table of Contents

Cover Page 1
Table of Contents 3
Definitions/Glossary 4
Case Narrative 5
Detection Summary 6
Client Sample Results 8
QC Sample Results 10
QC Association Summary 17
Lab Chronicle 20
Certification Summary 22
Method Summary 23
Sample Summary 24
Chain of Custody 25
Field Data Sheets 38
Receipt Checklists 54

Definitions/Glossary

Client: Tetra Tech Inc
Project/Site: Gulf of Thailand - 2025

Job ID: 350-1619-5

Qualifiers

Metals

Qualifier	Qualifier Description
^2	Calibration Blank (ICB and/or CCB) is outside acceptance limits.
B	Compound was found in the blank and sample.
F1	MS and/or MSD recovery exceeds control limits.
J	Result is less than the RL but greater than or equal to the MDL and the concentration is an approximate value.

Glossary

Abbreviation	These commonly used abbreviations may or may not be present in this report.
☼	Listed under the "D" column to designate that the result is reported on a dry weight basis
%R	Percent Recovery
CFL	Contains Free Liquid
CFU	Colony Forming Unit
CNF	Contains No Free Liquid
DER	Duplicate Error Ratio (normalized absolute difference)
Dil Fac	Dilution Factor
DL	Detection Limit (DoD/DOE)
DL, RA, RE, IN	Indicates a Dilution, Re-analysis, Re-extraction, or additional Initial metals/anion analysis of the sample
DLC	Decision Level Concentration (Radiochemistry)
EDL	Estimated Detection Limit (Dioxin)
LOD	Limit of Detection (DoD/DOE)
LOQ	Limit of Quantitation (DoD/DOE)
MCL	EPA recommended "Maximum Contaminant Level"
MDA	Minimum Detectable Activity (Radiochemistry)
MDC	Minimum Detectable Concentration (Radiochemistry)
MDL	Method Detection Limit
ML	Minimum Level (Dioxin)
MPN	Most Probable Number
MQL	Method Quantitation Limit
NC	Not Calculated
ND	Not Detected at the reporting limit (or MDL or EDL if shown)
NEG	Negative / Absent
POS	Positive / Present
PQL	Practical Quantitation Limit
PRES	Presumptive
QC	Quality Control
RER	Relative Error Ratio (Radiochemistry)
RL	Reporting Limit or Requested Limit (Radiochemistry)
RPD	Relative Percent Difference, a measure of the relative difference between two points
TEF	Toxicity Equivalent Factor (Dioxin)
TEQ	Toxicity Equivalent Quotient (Dioxin)
TNTC	Too Numerous To Count

Job Narrative
350-1619-5

Analytical test results meet all requirements of the associated regulatory program listed on the Accreditation/Certification Summary Page unless otherwise noted under the individual analysis. Data qualifiers and/or narrative comments are included to explain any exceptions, if applicable.

- Matrix QC may not be reported if insufficient sample is provided or site-specific QC samples were not submitted. In these situations, to demonstrate precision and accuracy at a batch level, a LCS/LCSD may be performed, unless otherwise specified in the method.
- Surrogate and/or isotope dilution analyte recoveries (if applicable) which are outside of the QC window are confirmed unless attributed to a dilution or otherwise noted in the narrative.

Regulated compliance samples (e.g. SDWA, NPDES) must comply with the associated agency requirements/permits.

Receipt
The samples were received on 3/6/2025 10:30 AM. Unless otherwise noted below, the samples arrived in good condition, and, where required, properly preserved and on ice. The temperatures of the 15 coolers at receipt time were -16.2°C, -15.4°C, -15.2°C, -15.2°C, -12.4°C, -12.2°C, -12.2°C, -12.0°C, -7.8°C, -6.8°C, -6.7°C, -6.6°C, -6.4°C, -5.9°C and -1.3°C.

Receipt Exceptions
multiple sample(s) did not match the information listed on the Chain-of-Custody (COC): Most descrepancies were noted in the sampling times. The client was contacted, to update them accordingly. All samples were updated in TALS. Please see email attachemnts for details.

Metals
Method 1638: The method blank for preparation batch 350-5865 and analytical batch 350-6050 contained Manganese above the reporting limit (RL). Associated sample(s) were not re-extracted and/or re-analyzed because results were greater than 10X the value found in the method blank.

Method 1638: The continuing calibration blank (CCB) for analytical batch 350-6050 contained Manganese above the reporting limit (RL). All reported samples associated with this CCB were either ND for this analyte or contained this analyte at a concentration greater than 10X the value found in the CCB; therefore, re-analysis of samples was not performed.

Method 1638: The continuing calibration blank (CCB) for analytical batch 350-6050 contained Manganese above the reporting limit (RL). All reported samples associated with this CCB were either ND for this analyte or contained this analyte at a concentration greater than 10X the value found in the CCB; therefore, re-analysis of samples was not performed.

Method 1640: The matrix spike / matrix spike duplicate (MS/MSD) recoveries and precision for preparation batch 350-6089 and 350-6090 and analytical batch 350-6254 were outside control limits. Sample matrix interference and/or non-homogeneity are suspected because the associated laboratory control sample / laboratory sample control duplicate (LCS/LCSD) precision was within acceptance limits.

Method 1640: The matrix spike / matrix spike duplicate (MS/MSD) recoveries and precision for preparation batch 350-6089 and 350-6090 and analytical batch 350-6206 were outside control limits. Sample matrix interference and/or non-homogeneity are suspected because the associated laboratory control sample / laboratory sample control duplicate (LCS/LCSD) precision was within acceptance limits.

No additional analytical or quality issues were noted, other than those described above or in the Definitions/ Glossary page.

General Chemistry
No additional analytical or quality issues were noted, other than those described above or in the Definitions/ Glossary page.

Detection Summary

Client: Tetra Tech Inc
Project/Site: Gulf of Thailand - 2025

Job ID: 350-1619-5

Client Sample ID: G4/43REF-A — Lab Sample ID: 350-1619-483

Analyte	Result	Qualifier	RL	MDL	Unit	Dil Fac	D	Method	Prep Type
Mercury	17		2.6	1.3	ng/g	20	☼	1631B	Total/NA
Arsenic	5.5		0.44	0.13	mg/Kg	1	☼	1638	Total/NA
Barium	160		44	0.087	mg/Kg	1	☼	1638	Total/NA
Cadmium	0.069		0.044	0.0044	mg/Kg	1	☼	1638	Total/NA
Chromium	52		0.44	0.44	mg/Kg	1	☼	1638	Total/NA
Copper	13		0.22	0.026	mg/Kg	1	☼	1638	Total/NA
Iron	21000		44	8.7	mg/Kg	1	☼	1638	Total/NA
Manganese	870	^2	0.22	0.022	mg/Kg	1	☼	1638	Total/NA
Nickel	28		0.87	0.035	mg/Kg	1	☼	1638	Total/NA
Lead	22		0.17	0.017	mg/Kg	1	☼	1638	Total/NA
Zinc	42		4.4	2.2	mg/Kg	1	☼	1638	Total/NA

Client Sample ID: G4/43REF-A-SW-1 — Lab Sample ID: 350-1619-484

Analyte	Result	Qualifier	RL	MDL	Unit	Dil Fac	D	Method	Prep Type
Arsenic	1.2		0.70	0.63	ug/L	1		1640	Total/NA
Chromium	1.1		1.0	0.11	ug/L	1		1640	Total/NA
Nickel	0.20	J	0.50	0.15	ug/L	1		1640	Total/NA
Barium	12		0.50	0.088	ug/L	1		1640	Total/NA
Iron	2.0	J	5.0	0.81	ug/L	1		1640	Total/NA
Manganese	0.82		0.050	0.030	ug/L	1		1640	Total/NA

Client Sample ID: G4/43REF-A-SW-20 — Lab Sample ID: 350-1619-485

Analyte	Result	Qualifier	RL	MDL	Unit	Dil Fac	D	Method	Prep Type
Mercury	0.20	J	0.50	0.20	ng/L	1		1631E	Total/NA
Arsenic	1.1		0.70	0.63	ug/L	1		1640	Total/NA
Chromium	1.1		1.0	0.11	ug/L	1		1640	Total/NA
Nickel	0.17	J	0.50	0.15	ug/L	1		1640	Total/NA
Barium	13	F1	0.50	0.088	ug/L	1		1640	Total/NA
Iron	0.84	J B	5.0	0.81	ug/L	1		1640	Total/NA
Manganese	1.3	F1	0.050	0.030	ug/L	1		1640	Total/NA

Client Sample ID: G4/43REF-A-SW-40 — Lab Sample ID: 350-1619-486

Analyte	Result	Qualifier	RL	MDL	Unit	Dil Fac	D	Method	Prep Type
Mercury	0.26	J	0.50	0.20	ng/L	1		1631E	Total/NA
Arsenic	1.3		0.70	0.63	ug/L	1		1640	Total/NA
Chromium	1.2		1.0	0.11	ug/L	1		1640	Total/NA
Lead	0.023	J B	0.050	0.023	ug/L	1		1640	Total/NA
Nickel	0.21	J	0.50	0.15	ug/L	1		1640	Total/NA
Barium	13	F1	0.50	0.088	ug/L	1		1640	Total/NA
Iron	11	B	5.0	0.81	ug/L	1		1640	Total/NA
Manganese	1.3	F1	0.050	0.030	ug/L	1		1640	Total/NA

Client Sample ID: G4/43REF-A-SW-B — Lab Sample ID: 350-1619-487

Analyte	Result	Qualifier	RL	MDL	Unit	Dil Fac	D	Method	Prep Type
Arsenic	1.3		0.70	0.63	ug/L	1		1640	Total/NA
Chromium	1.2		1.0	0.11	ug/L	1		1640	Total/NA
Lead	0.033	J B	0.050	0.023	ug/L	1		1640	Total/NA
Nickel	0.25	J	0.50	0.15	ug/L	1		1640	Total/NA
Barium	13		0.50	0.088	ug/L	1		1640	Total/NA

This Detection Summary does not include radiochemical test results.

Detection Summary

Client: Tetra Tech Inc
Project/Site: Gulf of Thailand - 2025

Job ID: 350-1619-5

Client Sample ID: G4/43REF-A-SW-B (Continued)

Lab Sample ID: 350-1619-487

Analyte	Result	Qualifier	RL	MDL	Unit	Dil Fac	D	Method	Prep Type
Iron	28	B	5.0	0.81	ug/L	1		1640	Total/NA
Manganese	2.8		0.050	0.030	ug/L	1		1640	Total/NA

This Detection Summary does not include radiochemical test results.

Client Sample Results

Client: Tetra Tech Inc
Project/Site: Gulf of Thailand - 2025

Job ID: 350-1619-5

Client Sample ID: G4/43REF-A

Lab Sample ID: 350-1619-483
Date Collected: 02/10/25 02:08
Matrix: Solid
Date Received: 03/06/25 10:30
Percent Solids: 43.6

Method: EPA 1631B - Mercury, Low Level (CVAFS)

Analyte	Result	Qualifier	RL	MDL	Unit	D	Prepared	Analyzed	Dil Fac
Mercury	17		2.6	1.3	ng/g	☼	04/03/25 20:27	04/10/25 21:01	20

Method: EPA 1638 - Metals (ICP/MS)

Analyte	Result	Qualifier	RL	MDL	Unit	D	Prepared	Analyzed	Dil Fac
Arsenic	5.5		0.44	0.13	mg/Kg	☼	03/28/25 17:51	04/03/25 17:31	1
Barium	160		44	0.087	mg/Kg	☼	03/28/25 17:51	04/03/25 17:31	1
Cadmium	0.069		0.044	0.0044	mg/Kg	☼	03/28/25 17:51	04/03/25 17:31	1
Chromium	52		0.44	0.44	mg/Kg	☼	03/28/25 17:51	04/03/25 17:31	1
Copper	13		0.22	0.026	mg/Kg	☼	03/28/25 17:51	04/03/25 17:31	1
Iron	21000		44	8.7	mg/Kg	☼	03/28/25 17:51	04/03/25 17:31	1
Manganese	870	^2	0.22	0.022	mg/Kg	☼	03/28/25 17:51	04/03/25 17:31	1
Nickel	28		0.87	0.035	mg/Kg	☼	03/28/25 17:51	04/03/25 17:31	1
Lead	22		0.17	0.017	mg/Kg	☼	03/28/25 17:51	04/03/25 17:31	1
Zinc	42		4.4	2.2	mg/Kg	☼	03/28/25 17:51	04/03/25 17:31	1

Client Sample ID: G4/43REF-A-SW-1

Lab Sample ID: 350-1619-484
Date Collected: 02/10/25 01:01
Matrix: Water
Date Received: 03/06/25 10:30

Method: EPA 1631E - Mercury, Low Level (CVAFS)

Analyte	Result	Qualifier	RL	MDL	Unit	D	Prepared	Analyzed	Dil Fac
Mercury	ND		0.50	0.20	ng/L			04/25/25 20:12	1

Method: EPA 1640 - Metals (ICPMS)

Analyte	Result	Qualifier	RL	MDL	Unit	D	Prepared	Analyzed	Dil Fac
Arsenic	1.2		0.70	0.63	ug/L		04/08/25 15:53	04/09/25 14:40	1
Cadmium	ND		0.020	0.013	ug/L		04/08/25 15:53	04/09/25 14:40	1
Chromium	1.1		1.0	0.11	ug/L		04/08/25 15:53	04/09/25 14:40	1
Copper	ND		0.50	0.43	ug/L		04/08/25 15:53	04/09/25 14:40	1
Lead	ND		0.050	0.023	ug/L		04/08/25 15:53	04/09/25 14:40	1
Nickel	0.20	J	0.50	0.15	ug/L		04/08/25 15:53	04/09/25 14:40	1
Zinc	ND		1.0	0.31	ug/L		04/08/25 15:53	04/09/25 14:40	1
Barium	12		0.50	0.088	ug/L		04/08/25 15:53	04/09/25 14:40	1
Iron	2.0	J	5.0	0.81	ug/L		04/08/25 15:53	04/09/25 14:40	1
Manganese	0.82		0.050	0.030	ug/L		04/08/25 15:53	04/09/25 14:40	1

Client Sample ID: G4/43REF-A-SW-20

Lab Sample ID: 350-1619-485
Date Collected: 02/10/25 01:07
Matrix: Water
Date Received: 03/06/25 10:30

Method: EPA 1631E - Mercury, Low Level (CVAFS)

Analyte	Result	Qualifier	RL	MDL	Unit	D	Prepared	Analyzed	Dil Fac
Mercury	0.20	J	0.50	0.20	ng/L			04/25/25 20:16	1

Method: EPA 1640 - Metals (ICPMS)

Analyte	Result	Qualifier	RL	MDL	Unit	D	Prepared	Analyzed	Dil Fac
Arsenic	1.1		0.70	0.63	ug/L		04/08/25 16:09	04/10/25 20:07	1
Cadmium	ND		0.020	0.013	ug/L		04/08/25 16:09	04/10/25 20:07	1
Chromium	1.1		1.0	0.11	ug/L		04/08/25 16:09	04/10/25 20:07	1
Copper	ND		0.50	0.43	ug/L		04/08/25 16:09	04/10/25 20:07	1
Lead	ND		0.050	0.023	ug/L		04/08/25 16:09	04/10/25 20:07	1

Client Sample Results

Client: Tetra Tech Inc
Project/Site: Gulf of Thailand - 2025

Job ID: 350-1619-5

Client Sample ID: G4/43REF-A-SW-20

Lab Sample ID: 350-1619-485
Date Collected: 02/10/25 01:07
Matrix: Water
Date Received: 03/06/25 10:30

Method: EPA 1640 - Metals (ICPMS) (Continued)

Analyte	Result	Qualifier	RL	MDL	Unit	D	Prepared	Analyzed	Dil Fac
Nickel	0.17	J	0.50	0.15	ug/L		04/08/25 16:09	04/10/25 20:07	1
Zinc	ND		1.0	0.31	ug/L		04/08/25 16:09	04/10/25 20:07	1
Barium	13	F1	0.50	0.088	ug/L		04/08/25 16:09	04/10/25 20:07	1
Iron	0.84	J B	5.0	0.81	ug/L		04/08/25 16:09	04/10/25 20:07	1
Manganese	1.3	F1	0.050	0.030	ug/L		04/08/25 16:09	04/09/25 14:54	1

Client Sample ID: G4/43REF-A-SW-40

Lab Sample ID: 350-1619-486
Date Collected: 02/10/25 01:13
Matrix: Water
Date Received: 03/06/25 10:30

Method: EPA 1631E - Mercury, Low Level (CVAFS)

Analyte	Result	Qualifier	RL	MDL	Unit	D	Prepared	Analyzed	Dil Fac
Mercury	0.26	J	0.50	0.20	ng/L			04/25/25 20:20	1

Method: EPA 1640 - Metals (ICPMS)

Analyte	Result	Qualifier	RL	MDL	Unit	D	Prepared	Analyzed	Dil Fac
Arsenic	1.3		0.70	0.63	ug/L		04/08/25 16:09	04/09/25 15:36	1
Cadmium	ND		0.020	0.013	ug/L		04/08/25 16:09	04/09/25 15:36	1
Chromium	1.2		1.0	0.11	ug/L		04/08/25 16:09	04/09/25 15:36	1
Copper	ND		0.50	0.43	ug/L		04/08/25 16:09	04/09/25 15:36	1
Lead	0.023	J B	0.050	0.023	ug/L		04/08/25 16:09	04/09/25 15:36	1
Nickel	0.21	J	0.50	0.15	ug/L		04/08/25 16:09	04/09/25 15:36	1
Zinc	ND		1.0	0.31	ug/L		04/08/25 16:09	04/09/25 15:36	1
Barium	13	F1	0.50	0.088	ug/L		04/08/25 16:09	04/09/25 15:36	1
Iron	11	B	5.0	0.81	ug/L		04/08/25 16:09	04/09/25 15:36	1
Manganese	1.3	F1	0.050	0.030	ug/L		04/08/25 16:09	04/09/25 15:36	1

Client Sample ID: G4/43REF-A-SW-B

Lab Sample ID: 350-1619-487
Date Collected: 02/10/25 01:26
Matrix: Water
Date Received: 03/06/25 10:30

Method: EPA 1631E - Mercury, Low Level (CVAFS)

Analyte	Result	Qualifier	RL	MDL	Unit	D	Prepared	Analyzed	Dil Fac
Mercury	ND		0.50	0.20	ng/L			04/25/25 20:24	1

Method: EPA 1640 - Metals (ICPMS)

Analyte	Result	Qualifier	RL	MDL	Unit	D	Prepared	Analyzed	Dil Fac
Arsenic	1.3		0.70	0.63	ug/L		04/08/25 16:09	04/09/25 16:18	1
Cadmium	ND		0.020	0.013	ug/L		04/08/25 16:09	04/09/25 16:18	1
Chromium	1.2		1.0	0.11	ug/L		04/08/25 16:09	04/09/25 16:18	1
Copper	ND		0.50	0.43	ug/L		04/08/25 16:09	04/09/25 16:18	1
Lead	0.033	J B	0.050	0.023	ug/L		04/08/25 16:09	04/09/25 16:18	1
Nickel	0.25	J	0.50	0.15	ug/L		04/08/25 16:09	04/09/25 16:18	1
Zinc	ND		1.0	0.31	ug/L		04/08/25 16:09	04/09/25 16:18	1
Barium	13		0.50	0.088	ug/L		04/08/25 16:09	04/09/25 16:18	1
Iron	28	B	5.0	0.81	ug/L		04/08/25 16:09	04/09/25 16:18	1
Manganese	2.8		0.050	0.030	ug/L		04/08/25 16:09	04/09/25 16:18	1

Method: 1631B - Mercury, Low Level (CVAFS)

Lab Sample ID: MB 350-5999/1-A — **Client Sample ID: Method Blank**
Matrix: Solid — **Prep Type: Total/NA**
Analysis Batch: 6136 — **Prep Batch: 5999**

Analyte	MB Result	MB Qualifier	RL	MDL	Unit	D	Prepared	Analyzed	Dil Fac
Mercury	ND		1.2	0.58	ng/g		04/03/25 20:27	04/09/25 19:29	20

Lab Sample ID: MB 350-5999/2-A — **Client Sample ID: Method Blank**
Matrix: Solid — **Prep Type: Total/NA**
Analysis Batch: 6136 — **Prep Batch: 5999**

Analyte	MB Result	MB Qualifier	RL	MDL	Unit	D	Prepared	Analyzed	Dil Fac
Mercury	ND		1.2	0.58	ng/g		04/03/25 20:27	04/09/25 19:33	20

Lab Sample ID: MB 350-5999/3-A — **Client Sample ID: Method Blank**
Matrix: Solid — **Prep Type: Total/NA**
Analysis Batch: 6136 — **Prep Batch: 5999**

Analyte	MB Result	MB Qualifier	RL	MDL	Unit	D	Prepared	Analyzed	Dil Fac
Mercury	ND		1.2	0.58	ng/g		04/03/25 20:27	04/09/25 19:37	20

Lab Sample ID: LCS 350-5999/4-A — **Client Sample ID: Lab Control Sample**
Matrix: Solid — **Prep Type: Total/NA**
Analysis Batch: 6136 — **Prep Batch: 5999**

Analyte	Spike Added	LCS Result	LCS Qualifier	Unit	D	%Rec	%Rec Limits
Mercury	397	401		ng/g		101	75 - 125

Lab Sample ID: LCSD 350-5999/5-A — **Client Sample ID: Lab Control Sample Dup**
Matrix: Solid — **Prep Type: Total/NA**
Analysis Batch: 6136 — **Prep Batch: 5999**

Analyte	Spike Added	LCSD Result	LCSD Qualifier	Unit	D	%Rec	%Rec Limits	RPD	RPD Limit
Mercury	397	422		ng/g		106	75 - 125	5	24

Method: 1631E - Mercury, Low Level (CVAFS)

Lab Sample ID: MB 350-6472/119 — **Client Sample ID: Method Blank**
Matrix: Water — **Prep Type: Total/NA**
Analysis Batch: 6472

Analyte	MB Result	MB Qualifier	RL	MDL	Unit	D	Prepared	Analyzed	Dil Fac
Mercury	ND		0.50	0.20	ng/L			04/25/25 18:20	1

Lab Sample ID: MB 350-6472/120 — **Client Sample ID: Method Blank**
Matrix: Water — **Prep Type: Total/NA**
Analysis Batch: 6472

Analyte	MB Result	MB Qualifier	RL	MDL	Unit	D	Prepared	Analyzed	Dil Fac
Mercury	ND		0.50	0.20	ng/L			04/25/25 18:24	1

Method: 1631E - Mercury, Low Level (CVAFS) (Continued)

Lab Sample ID: MB 350-6472/121
Matrix: Water
Analysis Batch: 6472

Client Sample ID: Method Blank
Prep Type: Total/NA

Analyte	MB Result	MB Qualifier	RL	MDL	Unit	D	Prepared	Analyzed	Dil Fac
Mercury	ND		0.50	0.20	ng/L			04/25/25 18:28	1

Lab Sample ID: LCS 350-6472/122
Matrix: Water
Analysis Batch: 6472

Client Sample ID: Lab Control Sample
Prep Type: Total/NA

Analyte	Spike Added	LCS Result	LCS Qualifier	Unit	D	%Rec	%Rec Limits
Mercury	5.00	4.93		ng/L		99	77 - 123

Lab Sample ID: LCSD 350-6472/123
Matrix: Water
Analysis Batch: 6472

Client Sample ID: Lab Control Sample Dup
Prep Type: Total/NA

Analyte	Spike Added	LCSD Result	LCSD Qualifier	Unit	D	%Rec	%Rec Limits	RPD	RPD Limit
Mercury	5.00	4.86		ng/L		97	77 - 123	1	24

Method: 1638 - Metals (ICP/MS)

Lab Sample ID: MB 350-5865/1-A
Matrix: Solid
Analysis Batch: 6050

Client Sample ID: Method Blank
Prep Type: Total/NA
Prep Batch: 5865

Analyte	MB Result	MB Qualifier	RL	MDL	Unit	D	Prepared	Analyzed	Dil Fac
Arsenic	ND		0.20	0.060	mg/Kg		03/28/25 17:51	04/03/25 16:30	1
Barium	0.649	J	20	0.040	mg/Kg		03/28/25 17:51	04/03/25 16:30	1
Cadmium	ND		0.020	0.0020	mg/Kg		03/28/25 17:51	04/03/25 16:30	1
Chromium	ND		0.20	0.20	mg/Kg		03/28/25 17:51	04/03/25 16:30	1
Copper	0.0398	J	0.10	0.012	mg/Kg		03/28/25 17:51	04/03/25 16:30	1
Iron	ND		20	4.0	mg/Kg		03/28/25 17:51	04/03/25 16:30	1
Manganese	0.102		0.10	0.010	mg/Kg		03/28/25 17:51	04/03/25 16:30	1
Nickel	0.0217	J	0.40	0.016	mg/Kg		03/28/25 17:51	04/03/25 16:30	1
Lead	0.00810	J	0.080	0.0080	mg/Kg		03/28/25 17:51	04/03/25 16:30	1
Zinc	ND		2.0	1.0	mg/Kg		03/28/25 17:51	04/03/25 16:30	1

Lab Sample ID: MB 350-5865/2-A
Matrix: Solid
Analysis Batch: 6050

Client Sample ID: Method Blank
Prep Type: Total/NA
Prep Batch: 5865

Analyte	MB Result	MB Qualifier	RL	MDL	Unit	D	Prepared	Analyzed	Dil Fac
Arsenic	ND		0.20	0.060	mg/Kg		03/28/25 17:51	04/03/25 16:32	1
Barium	0.495	J	20	0.040	mg/Kg		03/28/25 17:51	04/03/25 16:32	1
Cadmium	ND		0.020	0.0020	mg/Kg		03/28/25 17:51	04/03/25 16:32	1
Chromium	ND		0.20	0.20	mg/Kg		03/28/25 17:51	04/03/25 16:32	1
Copper	0.0299	J	0.10	0.012	mg/Kg		03/28/25 17:51	04/03/25 16:32	1
Iron	17.9	J	20	4.0	mg/Kg		03/28/25 17:51	04/03/25 16:32	1
Manganese	0.110		0.10	0.010	mg/Kg		03/28/25 17:51	04/03/25 16:32	1
Nickel	0.0233	J	0.40	0.016	mg/Kg		03/28/25 17:51	04/03/25 16:32	1
Lead	0.0110	J	0.080	0.0080	mg/Kg		03/28/25 17:51	04/03/25 16:32	1
Zinc	ND		2.0	1.0	mg/Kg		03/28/25 17:51	04/03/25 16:32	1

Method: 1638 - Metals (ICP/MS) (Continued)

Lab Sample ID: LCS 350-5865/3-A
Matrix: Solid
Analysis Batch: 6050

Client Sample ID: Lab Control Sample
Prep Type: Total/NA
Prep Batch: 5865

Analyte	Spike Added	LCS Result	LCS Qualifier	Unit	D	%Rec	%Rec Limits
Arsenic	100	104		mg/Kg		104	75 - 125
Barium	100	108	J	mg/Kg		108	75 - 125
Cadmium	20.0	20.4		mg/Kg		102	75 - 125
Chromium	100	107		mg/Kg		107	75 - 125
Copper	100	112		mg/Kg		112	75 - 125
Iron	2500	2730		mg/Kg		109	75 - 125
Manganese	100	103		mg/Kg		103	75 - 125
Nickel	100	107		mg/Kg		107	75 - 125
Lead	100	105		mg/Kg		105	75 - 125
Zinc	100	106		mg/Kg		106	75 - 125

Lab Sample ID: LCSD 350-5865/4-A
Matrix: Solid
Analysis Batch: 6050

Client Sample ID: Lab Control Sample Dup
Prep Type: Total/NA
Prep Batch: 5865

Analyte	Spike Added	LCSD Result	LCSD Qualifier	Unit	D	%Rec	%Rec Limits	RPD	RPD Limit
Arsenic	100	98.7		mg/Kg		99	75 - 125	5	20
Barium	100	99.3	J	mg/Kg		99	75 - 125	9	20
Cadmium	20.0	19.1		mg/Kg		95	75 - 125	7	20
Chromium	100	100		mg/Kg		100	75 - 125	7	20
Copper	100	105		mg/Kg		105	75 - 125	6	20
Iron	2500	2580		mg/Kg		103	75 - 125	6	20
Manganese	100	96.6		mg/Kg		97	75 - 125	7	20
Nickel	100	100		mg/Kg		100	75 - 125	6	20
Lead	100	98.9		mg/Kg		99	75 - 125	6	20
Zinc	100	101		mg/Kg		101	75 - 125	6	20

Method: 1640 - Metals (ICPMS)

Lab Sample ID: MB 350-6089/1-A
Matrix: Water
Analysis Batch: 6206

Client Sample ID: Method Blank
Prep Type: Total/NA
Prep Batch: 6089

Analyte	MB Result	MB Qualifier	RL	MDL	Unit	D	Prepared	Analyzed	Dil Fac
Arsenic	ND		0.70	0.63	ug/L		04/08/25 15:53	04/09/25 05:43	1
Cadmium	ND		0.020	0.013	ug/L		04/08/25 15:53	04/09/25 05:43	1
Chromium	ND		1.0	0.11	ug/L		04/08/25 15:53	04/09/25 05:43	1
Copper	ND		0.50	0.43	ug/L		04/08/25 15:53	04/09/25 05:43	1
Lead	ND		0.050	0.023	ug/L		04/08/25 15:53	04/09/25 05:43	1
Nickel	ND		0.50	0.15	ug/L		04/08/25 15:53	04/09/25 05:43	1
Zinc	ND		1.0	0.31	ug/L		04/08/25 15:53	04/09/25 05:43	1
Barium	ND		0.50	0.088	ug/L		04/08/25 15:53	04/09/25 05:43	1
Iron	ND		5.0	0.81	ug/L		04/08/25 15:53	04/09/25 05:43	1
Manganese	ND		0.050	0.030	ug/L		04/08/25 15:53	04/09/25 05:43	1

Method: 1640 - Metals (ICPMS) (Continued)

Lab Sample ID: MB 350-6089/2-A
Matrix: Water
Analysis Batch: 6206

Client Sample ID: Method Blank
Prep Type: Total/NA
Prep Batch: 6089

Analyte	MB Result	MB Qualifier	RL	MDL	Unit	D	Prepared	Analyzed	Dil Fac
Arsenic	ND		0.70	0.63	ug/L		04/08/25 15:53	04/09/25 05:57	1
Cadmium	ND		0.020	0.013	ug/L		04/08/25 15:53	04/09/25 05:57	1
Chromium	ND		1.0	0.11	ug/L		04/08/25 15:53	04/09/25 05:57	1
Copper	ND		0.50	0.43	ug/L		04/08/25 15:53	04/09/25 05:57	1
Lead	ND		0.050	0.023	ug/L		04/08/25 15:53	04/09/25 05:57	1
Nickel	ND		0.50	0.15	ug/L		04/08/25 15:53	04/09/25 05:57	1
Zinc	ND		1.0	0.31	ug/L		04/08/25 15:53	04/09/25 05:57	1
Barium	ND		0.50	0.088	ug/L		04/08/25 15:53	04/09/25 05:57	1
Iron	ND		5.0	0.81	ug/L		04/08/25 15:53	04/09/25 05:57	1
Manganese	ND		0.050	0.030	ug/L		04/08/25 15:53	04/09/25 05:57	1

Lab Sample ID: LCS 350-6089/3-A
Matrix: Water
Analysis Batch: 6206

Client Sample ID: Lab Control Sample
Prep Type: Total/NA
Prep Batch: 6089

Analyte	Spike Added	LCS Result	LCS Qualifier	Unit	D	%Rec	%Rec Limits
Arsenic	12.5	11.3		ug/L		91	70 - 130
Cadmium	1.25	1.18		ug/L		95	70 - 130
Chromium	12.5	11.9		ug/L		95	70 - 130
Copper	12.5	12.0		ug/L		96	70 - 130
Lead	2.50	2.36		ug/L		95	70 - 130
Nickel	12.5	11.7		ug/L		94	70 - 130
Zinc	12.5	12.4		ug/L		99	70 - 130
Barium	12.5	12.1		ug/L		97	70 - 130
Iron	62.5	60.0		ug/L		96	70 - 130
Manganese	12.5	9.90		ug/L		79	70 - 130

Lab Sample ID: LCSD 350-6089/4-A
Matrix: Water
Analysis Batch: 6206

Client Sample ID: Lab Control Sample Dup
Prep Type: Total/NA
Prep Batch: 6089

Analyte	Spike Added	LCSD Result	LCSD Qualifier	Unit	D	%Rec	%Rec Limits	RPD	RPD Limit
Arsenic	12.5	11.4		ug/L		91	70 - 130	1	20
Cadmium	1.25	1.14		ug/L		91	70 - 130	3	20
Chromium	12.5	12.1		ug/L		97	70 - 130	2	20
Copper	12.5	11.7		ug/L		93	70 - 130	3	20
Lead	2.50	2.27		ug/L		91	70 - 130	4	20
Nickel	12.5	11.3		ug/L		90	70 - 130	4	20
Zinc	12.5	12.0		ug/L		96	70 - 130	3	20
Barium	12.5	11.9		ug/L		95	70 - 130	2	20
Iron	62.5	59.3		ug/L		95	70 - 130	1	20
Manganese	12.5	9.81		ug/L		79	70 - 130	1	20

Lab Sample ID: LCSD 350-6089/4-A
Matrix: Water
Analysis Batch: 6206

Client Sample ID: Lab Control Sample Dup
Prep Type: Total/NA
Prep Batch: 6089

Analyte	Spike Added	LCSD Result	LCSD Qualifier	Unit	D	%Rec	%Rec Limits	RPD	RPD Limit
Arsenic	12.5	11.0		ug/L		88	70 - 130	3	20

Method: 1640 - Metals (ICPMS) (Continued)

Lab Sample ID: LCSD 350-6089/4-A
Matrix: Water
Analysis Batch: 6206

Client Sample ID: Lab Control Sample Dup
Prep Type: Total/NA
Prep Batch: 6089

Analyte	Spike Added	LCSD Result	LCSD Qualifier	Unit	D	%Rec	%Rec Limits	RPD	RPD Limit
Cadmium	1.25	1.12		ug/L		90	70 - 130	5	20
Chromium	12.5	11.9		ug/L		96	70 - 130	1	20
Copper	12.5	11.1		ug/L		89	70 - 130	8	20
Lead	2.50	2.20		ug/L		88	70 - 130	7	20
Nickel	12.5	10.9		ug/L		88	70 - 130	7	20
Zinc	12.5	11.6		ug/L		93	70 - 130	6	20
Barium	12.5	12.1		ug/L		97	70 - 130	0	20
Iron	62.5	59.6		ug/L		95	70 - 130	1	20

Lab Sample ID: MB 350-6090/1-A
Matrix: Water
Analysis Batch: 6206

Client Sample ID: Method Blank
Prep Type: Total/NA
Prep Batch: 6090

Analyte	MB Result	MB Qualifier	RL	MDL	Unit	D	Prepared	Analyzed	Dil Fac
Arsenic	ND		0.70	0.63	ug/L		04/08/25 16:09	04/09/25 06:40	1
Cadmium	ND		0.020	0.013	ug/L		04/08/25 16:09	04/09/25 06:40	1
Chromium	ND		1.0	0.11	ug/L		04/08/25 16:09	04/09/25 06:40	1
Copper	ND		0.50	0.43	ug/L		04/08/25 16:09	04/09/25 06:40	1
Lead	0.0234	J	0.050	0.023	ug/L		04/08/25 16:09	04/09/25 06:40	1
Nickel	ND		0.50	0.15	ug/L		04/08/25 16:09	04/09/25 06:40	1
Zinc	ND		1.0	0.31	ug/L		04/08/25 16:09	04/09/25 06:40	1
Barium	ND		0.50	0.088	ug/L		04/08/25 16:09	04/09/25 06:40	1
Iron	2.07	J	5.0	0.81	ug/L		04/08/25 16:09	04/09/25 06:40	1
Manganese	ND		0.050	0.030	ug/L		04/08/25 16:09	04/09/25 06:40	1

Lab Sample ID: MB 350-6090/2-A
Matrix: Water
Analysis Batch: 6206

Client Sample ID: Method Blank
Prep Type: Total/NA
Prep Batch: 6090

Analyte	MB Result	MB Qualifier	RL	MDL	Unit	D	Prepared	Analyzed	Dil Fac
Arsenic	ND		0.70	0.63	ug/L		04/08/25 16:09	04/09/25 06:54	1
Cadmium	ND		0.020	0.013	ug/L		04/08/25 16:09	04/09/25 06:54	1
Chromium	ND		1.0	0.11	ug/L		04/08/25 16:09	04/09/25 06:54	1
Copper	ND		0.50	0.43	ug/L		04/08/25 16:09	04/09/25 06:54	1
Lead	ND		0.050	0.023	ug/L		04/08/25 16:09	04/09/25 06:54	1
Nickel	ND		0.50	0.15	ug/L		04/08/25 16:09	04/09/25 06:54	1
Zinc	ND		1.0	0.31	ug/L		04/08/25 16:09	04/09/25 06:54	1
Barium	ND		0.50	0.088	ug/L		04/08/25 16:09	04/09/25 06:54	1
Iron	ND		5.0	0.81	ug/L		04/08/25 16:09	04/09/25 06:54	1
Manganese	ND		0.050	0.030	ug/L		04/08/25 16:09	04/09/25 06:54	1

Lab Sample ID: LCS 350-6090/3-A
Matrix: Water
Analysis Batch: 6206

Client Sample ID: Lab Control Sample
Prep Type: Total/NA
Prep Batch: 6090

Analyte	Spike Added	LCS Result	LCS Qualifier	Unit	D	%Rec	%Rec Limits
Arsenic	12.5	11.6		ug/L		93	70 - 130
Cadmium	1.25	1.15		ug/L		92	70 - 130
Chromium	12.5	12.1		ug/L		97	70 - 130

Method: 1640 - Metals (ICPMS) (Continued)

Lab Sample ID: LCS 350-6090/3-A
Matrix: Water
Analysis Batch: 6206

Client Sample ID: Lab Control Sample
Prep Type: Total/NA
Prep Batch: 6090

Analyte	Spike Added	LCS Result	LCS Qualifier	Unit	D	%Rec	%Rec Limits
Copper	12.5	12.0		ug/L		96	70 - 130
Lead	2.50	2.31		ug/L		92	70 - 130
Nickel	12.5	11.4		ug/L		91	70 - 130
Zinc	12.5	12.1		ug/L		97	70 - 130
Barium	12.5	11.9		ug/L		95	70 - 130
Iron	62.5	58.7		ug/L		94	70 - 130
Manganese	12.5	9.87		ug/L		79	70 - 130

Lab Sample ID: LCSD 350-6090/4-A
Matrix: Water
Analysis Batch: 6206

Client Sample ID: Lab Control Sample Dup
Prep Type: Total/NA
Prep Batch: 6090

Analyte	Spike Added	LCSD Result	LCSD Qualifier	Unit	D	%Rec	%Rec Limits	RPD	RPD Limit
Arsenic	12.5	11.6		ug/L		93	70 - 130	0	20
Cadmium	1.25	1.16		ug/L		93	70 - 130	2	20
Chromium	12.5	11.9		ug/L		95	70 - 130	2	20
Copper	12.5	12.0		ug/L		96	70 - 130	0	20
Lead	2.50	2.32		ug/L		93	70 - 130	1	20
Nickel	12.5	11.4		ug/L		92	70 - 130	0	20
Zinc	12.5	12.4		ug/L		99	70 - 130	2	20
Barium	12.5	11.7		ug/L		93	70 - 130	2	20
Iron	62.5	60.5		ug/L		97	70 - 130	3	20
Manganese	12.5	10.2		ug/L		82	70 - 130	3	20

Lab Sample ID: 350-1619-485 MS
Matrix: Water
Analysis Batch: 6206

Client Sample ID: G4/43REF-A-SW-20
Prep Type: Total/NA
Prep Batch: 6090

Analyte	Sample Result	Sample Qualifier	Spike Added	MS Result	MS Qualifier	Unit	D	%Rec	%Rec Limits
Arsenic	1.1		12.5	14.1		ug/L		104	50 - 150
Cadmium	ND		1.25	1.27		ug/L		102	50 - 150
Chromium	1.1		12.5	14.9		ug/L		110	50 - 150
Copper	ND		12.5	14.1		ug/L		113	50 - 150
Lead	ND		2.50	2.37		ug/L		95	50 - 150
Nickel	0.17	J	12.5	13.6		ug/L		107	50 - 150
Zinc	ND		12.5	14.2		ug/L		114	50 - 150
Barium	13	F1	12.5	32.2	F1	ug/L		151	50 - 150
Iron	0.84	J B	62.5	77.3		ug/L		122	50 - 150
Manganese	1.3	F1	12.5	22.3	F1	ug/L		168	50 - 150

Lab Sample ID: 350-1619-485 MSD
Matrix: Water
Analysis Batch: 6206

Client Sample ID: G4/43REF-A-SW-20
Prep Type: Total/NA
Prep Batch: 6090

Analyte	Sample Result	Sample Qualifier	Spike Added	MSD Result	MSD Qualifier	Unit	D	%Rec	%Rec Limits	RPD	RPD Limit
Arsenic	1.1		12.5	14.1		ug/L		104	50 - 150	0	20
Cadmium	ND		1.25	1.32		ug/L		106	50 - 150	4	20
Chromium	1.1		12.5	15.2		ug/L		113	50 - 150	2	20
Copper	ND		12.5	14.7		ug/L		118	50 - 150	4	20

Method: 1640 - Metals (ICPMS) (Continued)

Lab Sample ID: 350-1619-485 MSD — **Client Sample ID: G4/43REF-A-SW-20**
Matrix: Water — **Prep Type: Total/NA**
Analysis Batch: 6206 — **Prep Batch: 6090**

Analyte	Sample Result	Sample Qualifier	Spike Added	MSD Result	MSD Qualifier	Unit	D	%Rec	%Rec Limits	RPD	RPD Limit
Lead	ND		2.50	2.43		ug/L		97	50 - 150	3	20
Nickel	0.17	J	12.5	14.2		ug/L		112	50 - 150	5	20
Zinc	ND		12.5	15.2		ug/L		121	50 - 150	6	20
Barium	13	F1	12.5	32.9	F1	ug/L		157	50 - 150	2	20
Iron	0.84	J B	62.5	81.2		ug/L		129	50 - 150	5	20
Manganese	1.3	F1	12.5	23.0	F1	ug/L		174	50 - 150	3	20

Lab Sample ID: 350-1619-486 MS — **Client Sample ID: G4/43REF-A-SW-40**
Matrix: Water — **Prep Type: Total/NA**
Analysis Batch: 6206 — **Prep Batch: 6090**

Analyte	Sample Result	Sample Qualifier	Spike Added	MS Result	MS Qualifier	Unit	D	%Rec	%Rec Limits
Arsenic	1.3		12.5	14.2		ug/L		103	50 - 150
Cadmium	ND		1.25	1.30		ug/L		104	50 - 150
Chromium	1.2		12.5	14.7		ug/L		108	50 - 150
Copper	ND		12.5	14.2		ug/L		113	50 - 150
Lead	0.023	J B	2.50	2.44		ug/L		97	50 - 150
Nickel	0.21	J	12.5	13.9		ug/L		110	50 - 150
Zinc	ND		12.5	14.6		ug/L		117	50 - 150
Barium	13	F1	12.5	32.7	F1	ug/L		157	50 - 150
Iron	11	B	62.5	89.4		ug/L		125	50 - 150
Manganese	1.3	F1	12.5	23.0	F1	ug/L		173	50 - 150

Lab Sample ID: 350-1619-486 MSD — **Client Sample ID: G4/43REF-A-SW-40**
Matrix: Water — **Prep Type: Total/NA**
Analysis Batch: 6206 — **Prep Batch: 6090**

Analyte	Sample Result	Sample Qualifier	Spike Added	MSD Result	MSD Qualifier	Unit	D	%Rec	%Rec Limits	RPD	RPD Limit
Arsenic	1.3		12.5	14.3		ug/L		104	50 - 150	1	20
Cadmium	ND		1.25	1.28		ug/L		102	50 - 150	2	20
Chromium	1.2		12.5	15.0		ug/L		110	50 - 150	2	20
Copper	ND		12.5	14.1		ug/L		113	50 - 150	0	20
Lead	0.023	J B	2.50	2.39		ug/L		95	50 - 150	2	20
Nickel	0.21	J	12.5	13.5		ug/L		107	50 - 150	3	20
Zinc	ND		12.5	14.6		ug/L		117	50 - 150	0	20
Barium	13	F1	12.5	32.5	F1	ug/L		156	50 - 150	0	20
Iron	11	B	62.5	88.1		ug/L		123	50 - 150	1	20
Manganese	1.3	F1	12.5	21.7	F1	ug/L		163	50 - 150	6	20

QC Association Summary

Client: Tetra Tech Inc
Project/Site: Gulf of Thailand - 2025

Job ID: 350-1619-5

Metals

Prep Batch: 5865

Lab Sample ID	Client Sample ID	Prep Type	Matrix	Method	Prep Batch
350-1619-483	G4/43REF-A	Total/NA	Solid	HF Bomb Prep	
MB 350-5865/1-A	Method Blank	Total/NA	Solid	HF Bomb Prep	
MB 350-5865/2-A	Method Blank	Total/NA	Solid	HF Bomb Prep	
LCS 350-5865/3-A	Lab Control Sample	Total/NA	Solid	HF Bomb Prep	
LCSD 350-5865/4-A	Lab Control Sample Dup	Total/NA	Solid	HF Bomb Prep	

Prep Batch: 5999

Lab Sample ID	Client Sample ID	Prep Type	Matrix	Method	Prep Batch
350-1619-483	G4/43REF-A	Total/NA	Solid	1631B CAR Prep	
MB 350-5999/1-A	Method Blank	Total/NA	Solid	1631B CAR Prep	
MB 350-5999/2-A	Method Blank	Total/NA	Solid	1631B CAR Prep	
MB 350-5999/3-A	Method Blank	Total/NA	Solid	1631B CAR Prep	
LCS 350-5999/4-A	Lab Control Sample	Total/NA	Solid	1631B CAR Prep	
LCSD 350-5999/5-A	Lab Control Sample Dup	Total/NA	Solid	1631B CAR Prep	

Analysis Batch: 6050

Lab Sample ID	Client Sample ID	Prep Type	Matrix	Method	Prep Batch
350-1619-483	G4/43REF-A	Total/NA	Solid	1638	5865
MB 350-5865/1-A	Method Blank	Total/NA	Solid	1638	5865
MB 350-5865/2-A	Method Blank	Total/NA	Solid	1638	5865
LCS 350-5865/3-A	Lab Control Sample	Total/NA	Solid	1638	5865
LCSD 350-5865/4-A	Lab Control Sample Dup	Total/NA	Solid	1638	5865

Prep Batch: 6089

Lab Sample ID	Client Sample ID	Prep Type	Matrix	Method	Prep Batch
350-1619-484	G4/43REF-A-SW-1	Total/NA	Water	1640	
MB 350-6089/1-A	Method Blank	Total/NA	Water	1640	
MB 350-6089/2-A	Method Blank	Total/NA	Water	1640	
LCS 350-6089/3-A	Lab Control Sample	Total/NA	Water	1640	
LCSD 350-6089/4-A	Lab Control Sample Dup	Total/NA	Water	1640	

Prep Batch: 6090

Lab Sample ID	Client Sample ID	Prep Type	Matrix	Method	Prep Batch
350-1619-485	G4/43REF-A-SW-20	Total/NA	Water	1640	
350-1619-486	G4/43REF-A-SW-40	Total/NA	Water	1640	
350-1619-487	G4/43REF-A-SW-B	Total/NA	Water	1640	
MB 350-6090/1-A	Method Blank	Total/NA	Water	1640	
MB 350-6090/2-A	Method Blank	Total/NA	Water	1640	
LCS 350-6090/3-A	Lab Control Sample	Total/NA	Water	1640	
LCSD 350-6090/4-A	Lab Control Sample Dup	Total/NA	Water	1640	
350-1619-485 MS	G4/43REF-A-SW-20	Total/NA	Water	1640	
350-1619-485 MSD	G4/43REF-A-SW-20	Total/NA	Water	1640	
350-1619-486 MS	G4/43REF-A-SW-40	Total/NA	Water	1640	
350-1619-486 MSD	G4/43REF-A-SW-40	Total/NA	Water	1640	

QC Association Summary

Client: Tetra Tech Inc
Project/Site: Gulf of Thailand - 2025

Job ID: 350-1619-5

Metals

Analysis Batch: 6136

Lab Sample ID	Client Sample ID	Prep Type	Matrix	Method	Prep Batch
MB 350-5999/1-A	Method Blank	Total/NA	Solid	1631B	5999
MB 350-5999/2-A	Method Blank	Total/NA	Solid	1631B	5999
MB 350-5999/3-A	Method Blank	Total/NA	Solid	1631B	5999
LCS 350-5999/4-A	Lab Control Sample	Total/NA	Solid	1631B	5999
LCSD 350-5999/5-A	Lab Control Sample Dup	Total/NA	Solid	1631B	5999

Analysis Batch: 6150

Lab Sample ID	Client Sample ID	Prep Type	Matrix	Method	Prep Batch
350-1619-483	G4/43REF-A	Total/NA	Solid	1631B	5999

Analysis Batch: 6206

Lab Sample ID	Client Sample ID	Prep Type	Matrix	Method	Prep Batch
350-1619-484	G4/43REF-A-SW-1	Total/NA	Water	1640	6089
350-1619-485	G4/43REF-A-SW-20	Total/NA	Water	1640	6090
350-1619-486	G4/43REF-A-SW-40	Total/NA	Water	1640	6090
350-1619-487	G4/43REF-A-SW-B	Total/NA	Water	1640	6090
MB 350-6089/1-A	Method Blank	Total/NA	Water	1640	6089
MB 350-6089/2-A	Method Blank	Total/NA	Water	1640	6089
MB 350-6090/1-A	Method Blank	Total/NA	Water	1640	6090
MB 350-6090/2-A	Method Blank	Total/NA	Water	1640	6090
LCS 350-6089/3-A	Lab Control Sample	Total/NA	Water	1640	6089
LCS 350-6090/3-A	Lab Control Sample	Total/NA	Water	1640	6090
LCSD 350-6089/4-A	Lab Control Sample Dup	Total/NA	Water	1640	6089
LCSD 350-6089/4-A	Lab Control Sample Dup	Total/NA	Water	1640	6089
LCSD 350-6090/4-A	Lab Control Sample Dup	Total/NA	Water	1640	6090
350-1619-485 MS	G4/43REF-A-SW-20	Total/NA	Water	1640	6090
350-1619-485 MSD	G4/43REF-A-SW-20	Total/NA	Water	1640	6090
350-1619-486 MS	G4/43REF-A-SW-40	Total/NA	Water	1640	6090
350-1619-486 MSD	G4/43REF-A-SW-40	Total/NA	Water	1640	6090

Analysis Batch: 6254

Lab Sample ID	Client Sample ID	Prep Type	Matrix	Method	Prep Batch
350-1619-484	G4/43REF-A-SW-1	Total/NA	Water	1640	6089
350-1619-485	G4/43REF-A-SW-20	Total/NA	Water	1640	6090
350-1619-486	G4/43REF-A-SW-40	Total/NA	Water	1640	6090
350-1619-487	G4/43REF-A-SW-B	Total/NA	Water	1640	6090
MB 350-6089/1-A	Method Blank	Total/NA	Water	1640	6089
MB 350-6089/2-A	Method Blank	Total/NA	Water	1640	6089
MB 350-6090/1-A	Method Blank	Total/NA	Water	1640	6090
MB 350-6090/2-A	Method Blank	Total/NA	Water	1640	6090
LCS 350-6089/3-A	Lab Control Sample	Total/NA	Water	1640	6089
LCS 350-6090/3-A	Lab Control Sample	Total/NA	Water	1640	6090
LCSD 350-6089/4-A	Lab Control Sample Dup	Total/NA	Water	1640	6089
LCSD 350-6090/4-A	Lab Control Sample Dup	Total/NA	Water	1640	6090
350-1619-485 MS	G4/43REF-A-SW-20	Total/NA	Water	1640	6090
350-1619-485 MSD	G4/43REF-A-SW-20	Total/NA	Water	1640	6090
350-1619-486 MS	G4/43REF-A-SW-40	Total/NA	Water	1640	6090
350-1619-486 MSD	G4/43REF-A-SW-40	Total/NA	Water	1640	6090

QC Association Summary

Client: Tetra Tech Inc
Project/Site: Gulf of Thailand - 2025

Job ID: 350-1619-5

Metals

Analysis Batch: 6472

Lab Sample ID	Client Sample ID	Prep Type	Matrix	Method	Prep Batch
350-1619-484	G4/43REF-A-SW-1	Total/NA	Water	1631E	
350-1619-485	G4/43REF-A-SW-20	Total/NA	Water	1631E	
350-1619-486	G4/43REF-A-SW-40	Total/NA	Water	1631E	
350-1619-487	G4/43REF-A-SW-B	Total/NA	Water	1631E	
MB 350-6472/119	Method Blank	Total/NA	Water	1631E	
MB 350-6472/120	Method Blank	Total/NA	Water	1631E	
MB 350-6472/121	Method Blank	Total/NA	Water	1631E	
LCS 350-6472/122	Lab Control Sample	Total/NA	Water	1631E	
LCSD 350-6472/123	Lab Control Sample Dup	Total/NA	Water	1631E	

General Chemistry

Analysis Batch: 6068

Lab Sample ID	Client Sample ID	Prep Type	Matrix	Method	Prep Batch
350-1619-483	G4/43REF-A	Total/NA	Solid	Moisture - 2540	

Lab Chronicle

Client: Tetra Tech Inc
Project/Site: Gulf of Thailand - 2025

Job ID: 350-1619-5

Client Sample ID: G4/43REF-A
Lab Sample ID: 350-1619-483

Date Collected: 02/10/25 02:08
Date Received: 03/06/25 10:30
Matrix: Solid

Prep Type	Batch Type	Batch Method	Run	Dilution Factor	Batch Number	Analyst	Lab	Prepared or Analyzed
Total/NA	Analysis	Moisture - 2540		1	6068	JS	EET SSM	04/07/25 19:36

Client Sample ID: G4/43REF-A
Lab Sample ID: 350-1619-483

Date Collected: 02/10/25 02:08
Date Received: 03/06/25 10:30
Matrix: Solid
Percent Solids: 43.6

Prep Type	Batch Type	Batch Method	Run	Dilution Factor	Batch Number	Analyst	Lab	Prepared or Analyzed
Total/NA	Prep	1631B CAR Prep			5999	JS	EET SSM	04/03/25 20:27
Total/NA	Analysis	1631B		20	6150	AJD	EET SSM	04/10/25 21:01
Total/NA	Prep	HF Bomb Prep			5865	JS	EET SSM	03/28/25 17:51
Total/NA	Analysis	1638		1	6050	V1R	EET SSM	04/03/25 17:31

Client Sample ID: G4/43REF-A-SW-1
Lab Sample ID: 350-1619-484

Date Collected: 02/10/25 01:01
Date Received: 03/06/25 10:30
Matrix: Water

Prep Type	Batch Type	Batch Method	Run	Dilution Factor	Batch Number	Analyst	Lab	Prepared or Analyzed
Total/NA	Analysis	1631E		1	6472	CL	EET SSM	04/25/25 20:12
Total/NA	Prep	1640			6089	COW	EET SSM	04/08/25 15:53
Total/NA	Analysis	1640		1	6206	COW	EET SSM	04/09/25 14:40
Total/NA	Prep	1640			6089	COW	EET SSM	04/08/25 15:53
Total/NA	Analysis	1640		1	6254	COW	EET SSM	04/09/25 14:40

Client Sample ID: G4/43REF-A-SW-20
Lab Sample ID: 350-1619-485

Date Collected: 02/10/25 01:07
Date Received: 03/06/25 10:30
Matrix: Water

Prep Type	Batch Type	Batch Method	Run	Dilution Factor	Batch Number	Analyst	Lab	Prepared or Analyzed
Total/NA	Analysis	1631E		1	6472	CL	EET SSM	04/25/25 20:16
Total/NA	Prep	1640			6090	COW	EET SSM	04/08/25 16:09
Total/NA	Analysis	1640		1	6254	COW	EET SSM	04/09/25 14:54
Total/NA	Prep	1640			6090	COW	EET SSM	04/08/25 16:09
Total/NA	Analysis	1640		1	6206	COW	EET SSM	04/10/25 20:07

Client Sample ID: G4/43REF-A-SW-40
Lab Sample ID: 350-1619-486

Date Collected: 02/10/25 01:13
Date Received: 03/06/25 10:30
Matrix: Water

Prep Type	Batch Type	Batch Method	Run	Dilution Factor	Batch Number	Analyst	Lab	Prepared or Analyzed
Total/NA	Analysis	1631E		1	6472	CL	EET SSM	04/25/25 20:20
Total/NA	Prep	1640			6090	COW	EET SSM	04/08/25 16:09
Total/NA	Analysis	1640		1	6206	COW	EET SSM	04/09/25 15:36
Total/NA	Prep	1640			6090	COW	EET SSM	04/08/25 16:09
Total/NA	Analysis	1640		1	6254	COW	EET SSM	04/09/25 15:36

Lab Chronicle

Client: Tetra Tech Inc
Project/Site: Gulf of Thailand - 2025

Job ID: 350-1619-5

Client Sample ID: G4/43REF-A-SW-B

Lab Sample ID: 350-1619-487

Date Collected: 02/10/25 01:26

Matrix: Water

Date Received: 03/06/25 10:30

Prep Type	Batch Type	Batch Method	Run	Dilution Factor	Batch Number	Analyst	Lab	Prepared or Analyzed
Total/NA	Analysis	1631E		1	6472	CL	EET SSM	04/25/25 20:24
Total/NA	Prep	1640			6090	COW	EET SSM	04/08/25 16:09
Total/NA	Analysis	1640		1	6206	COW	EET SSM	04/09/25 16:18
Total/NA	Prep	1640			6090	COW	EET SSM	04/08/25 16:09
Total/NA	Analysis	1640		1	6254	COW	EET SSM	04/09/25 16:18

Laboratory References:

EET SSM = Eurofins Seattle Specialty Metals, 5755 8th Street East, Tacoma, WA 98424, TEL (253)922-2310

Accreditation/Certification Summary

Client: Tetra Tech Inc
Project/Site: Gulf of Thailand - 2025

Job ID: 350-1619-5

Laboratory: Eurofins Seattle Specialty Metals

All accreditations/certifications held by this laboratory are listed. Not all accreditations/certifications are applicable to this report.

Authority	Program	Identification Number	Expiration Date
Alaska (UST)	State	20-004	02-19-27
ANAB	Dept. of Defense ELAP	L2236	01-19-27
ANAB	Dept. of Energy	L2236.01	01-19-27
ANAB	ISO/IEC 17025	L2236	01-19-27
California	State	2954	07-07-25
Florida	NELAP	E87575	06-30-25
Louisiana (All)	NELAP	03073	06-30-25
Maine	State	WA01273	05-02-26
New Jersey	NELAP	WA014	06-30-25
New York	NELAP	11662	04-01-26
Oregon	NELAP	4167-008	07-07-25
US Fish & Wildlife	US Federal Programs	A20571	06-30-25
USDA	US Federal Programs	525-23-4-22573	01-04-26
Washington	State	C788-23a	07-13-25
Wisconsin	State	399133460	07-31-25

Method Summary

Client: Tetra Tech Inc
Project/Site: Gulf of Thailand - 2025

Job ID: 350-1619-5

Method	Method Description	Protocol	Laboratory
1631B	Mercury, Low Level (CVAFS)	EPA	EET SSM
1631E	Mercury, Low Level (CVAFS)	EPA	EET SSM
1638	Metals (ICP/MS)	EPA	EET SSM
1640	Metals (ICPMS)	EPA	EET SSM
Moisture - 2540	Percent Moisture	SM	EET SSM
1631B CAR Prep	Preparation of Solids, Modified Cold Aqua-Regia	Lab SOP	EET SSM
1640	Preparation, Total Recoverable Metals	EPA	EET SSM
HF Bomb Prep	HF/HNO3/ HCl Bomb Digestion of Solids for Total Metals	Lab SOP	EET SSM

Protocol References:

EPA = US Environmental Protection Agency
Lab SOP = Laboratory Standard Operating Procedure
SM = "Standard Methods For The Examination Of Water And Wastewater"

Laboratory References:

EET SSM = Eurofins Seattle Specialty Metals, 5755 8th Street East, Tacoma, WA 98424, TEL (253)922-2310

Sample Summary

Client: Tetra Tech Inc
Project/Site: Gulf of Thailand - 2025

Job ID: 350-1619-5

Lab Sample ID	Client Sample ID	Matrix	Collected	Received
350-1619-483	G4/43REF-A	Solid	02/10/25 02:08	03/06/25 10:30
350-1619-484	G4/43REF-A-SW-1	Water	02/10/25 01:01	03/06/25 10:30
350-1619-485	G4/43REF-A-SW-20	Water	02/10/25 01:07	03/06/25 10:30
350-1619-486	G4/43REF-A-SW-40	Water	02/10/25 01:13	03/06/25 10:30
350-1619-487	G4/43REF-A-SW-B	Water	02/10/25 01:26	03/06/25 10:30

Ship To:
Lilly-Anna Lacount
Eurofins Specialty Metals Testing
5755 8th St. E
Fife, WA 98424
USA

CHAIN of CUSTODY

Report to:
Dr. Ted Donn
Tetra Tech Inc.
Lafayette, CA
ted.donn@tetratech.com

350-1619 Chain of Custody

General Notes:
Each Project Specifies a different set of metals
Please report all results to the MDL, J-flag results between MDL and RL
Please report results and invoice separately for each Project ID
Please report results in pdf format with Excel EDD deliverable
Standard Processing

						Sediment				Seawater		
Project	Sample ID	Date	Time	Medium	Preserve	Hg (EPA 1631 B)	10 Metals (As, Ba, Cd, Cr, Cu, Fe, Mn, Ni, Pb, Zn) EPA 1631 M	6 Metals (As, Ba, Cd, Cu, Pb, Zn) EPA 1631 M	Dry Weight	Hg (EPA 1631 E)	10 Metals (As, Ba, Cd, Cr, Cu, Fe, Mn, Ni, Pb, Zn) EPA 1640	6 Metals (As, Ba, Cd, Cu, Pb, Zn) EPA 1640
T779.27	NPCPP-1C1	2/16/2025	3:55	SED	Frozen	1	1		1			
T779.27	NPCPP-1C1-FD	2/16/2025	4:14	SED	Frozen	1	1		1			
T779.27	NPCPP-1C2X	2/16/2025	2:53	SED	Frozen	1	1		1			
T779.27	NPCPP-1CP1	2/16/2025	8:12	SED	Frozen	1	1		1			
T779.27	NPCPP-1CP2	2/16/2025	7:36	SED	Frozen	1	1		1			
T779.27	NPCPP-1CP3X	2/16/2025	5:55	SED	Frozen	1	1		1			
T779.27	NPCPP-1D2	2/15/2025	1:46	SED	Frozen	1	1		1			
T779.27	NPCPP-1E2	2/15/2025	1:05	SED	Frozen	1	1		1			
T779.27	NPCPP-1F2	2/15/2025	0:22	SED	Frozen	1	1		1			
T779.27	NPCPP-1G2	2/14/2025	22:53	SED	Frozen	1	1		1			
T779.27	NPCPP-2C1X	2/16/2025	4:54	SED	Frozen	1	1		1			
T779.27	NPCPP-2C2	2/16/2025	5:22	SED	Frozen	1	1		1			
T779.27	NPCPP-2CP2	2/15/2025	5:42	SED	Frozen	1	1		1			
T779.27	NPCPP-2D2	2/15/2025	6:22	SED	Frozen	1	1		1			
T779.27	NPCPP-3C1	2/16/2025	8:56	SED	Frozen	1	1		1			
T779.27	NPCPP-3C2	2/15/2025	22:58	SED	Frozen	1	1		1			
T779.27	NPCPP-3C3X	2/15/2025	20:36	SED	Frozen	1	1		1			
T779.27	NPCPP-3C3X-FD	2/15/2025	20:54	SED	Frozen	1	1		1			
T779.27	NPCPP-3CP1	2/15/2025	17:01	SED	Frozen	1	1		1			
T779.27	NPCPP-3CP2	2/15/2025	11:07	SED	Frozen	1	1		1			
T779.27	NPCPP-3CP3X	2/15/2025	16:23	SED	Frozen	1	1		1			
T779.27	NPCPP-3D2	2/16/2025	9:50	SED	Frozen	1	1		1			
T779.27	NPCPP-3E2	2/16/2025	10:28	SED	Frozen	1	1		1			
T779.27	NPCPP-3F2X	2/16/2025	11:05	SED	Frozen	1	1		1			
T779.27	NPCPP-3G2	2/16/2025	13:04	SED	Frozen	1	1		1			
T779.27	NPCPP-4C2	2/15/2025	19:59	SED	Frozen	1	1		1			
T779.27	NPCPP-4CP2	2/15/2025	19:27	SED	Frozen	1	1		1			
T779.27	NPCPP-4D2	2/15/2025	18:54	SED	Frozen	1	1		1			
T779.27	NPREF-A	2/12/2025	21:54	SED	Frozen	1	1		1			
T779.27	NPREF-B	2/12/2025	22:27	SED	Frozen	1	1		1			
T779.27	NPREF-B-FD	2/12/2025	22:47	SED	Frozen	1	1		1			
T779.27	NPREF-C	2/12/2025	23:16	SED	Frozen	1	1		1			
T779.27	NPWB-1C2	2/14/2025	4:51	SED	Frozen	1	1		1			
T779.27	NPWB-1C2-FD	2/14/2025	5:13	SED	Frozen	1	1		1			
T779.27	NPWB-1CP2	2/14/2025	3:00	SED	Frozen	1	1		1			
T779.27	NPWB-1D2	2/14/2025	4:06	SED	Frozen	1	1		1			
T779.27	NPWB-2B3	2/14/2025	18:54	SED	Frozen	1	1		1			

Relinquished by: 26 FEB 2025

Recieved by:

Relinquished by:

Recieved by: Jesse Singh (EETN) 3/6/25 10:32

Trk# 7723 4788 9328

Ship To:
Lily-Anna Lacount
Eurofins Specialty Metals Testing
5755 8th St. E
Fife, WA 98424
USA

CHAIN of CUSTODY

Report to:
Dr. Ted Donn
Tetra Tech Inc.
Lafayette, CA
ted.donn@tetratech.com

Project	Sample ID	Date	Time	Medium	Preserve	Hg (EPA 1631 B)	10 Metals (As, Ba, Cd, Cr, Cu, Fe, Mn, Ni, Pb, Zn) EPA 1631 M	6 Metals (As, Ba, Cd, Cu, Pb, Zn) EPA 1631 M	Dry Weight	Hg (EPA 1631 E)	10 Metals (As, Ba, Cd, Cr, Cu, Fe, Mn, Ni, Pb, Zn) EPA 1640	6 Metals (As, Ba, Cd, Cu, Pb, Zn) EPA 1640
T779.27	NPWB-2C2X	2/14/2025	5:33	SED	Frozen	1	1		1			
T779.27	NPWB-3B2	2/14/2025	18:29	SED	Frozen	1	1		1			
T779.27	NPWB-3C2	2/14/2025	20:22	SED	Frozen	1	1		1			
T779.27	NPWB-3CP2	2/14/2025	21:24	SED	Frozen	1	1		1			
T779.27	NPWB-3D2	2/14/2025	21:55	SED	Frozen	1	1		1			
T779.27	NPWB-4B3X	2/14/2025	19:19	SED	Frozen	1	1		1			
T779.27	NPWB-4C2	2/14/2025	19:52	SED	Frozen	1	1		1			
T779.27	NPWG-1B2X	2/17/2025	10:17	SED	Frozen	1	1		1			
T779.27	NPWG-1B2X-FD	2/17/2025	10:42	SED	Frozen	1	1		1			
T779.27	NPWG-1C2	2/17/2025	5:05	SED	Frozen	1	1		1			
T779.27	NPWG-1CP2	2/17/2025	3:37	SED	Frozen	1	1		1			
T779.27	NPWG-1D2	2/17/2025	4:14	SED	Frozen	1	1		1			
T779.27	NPWG-2B2X	2/16/2025	22:45	SED	Frozen	1	1		1			
T779.27	NPWG-2C2	2/16/2025	22:06	SED	Frozen	1	1		1			
T779.27	NPWG-3B2X	2/17/2025	15:36	SED	Frozen	1	1		1			
T779.27	NPWG-3C2	2/17/2025	14:17	SED	Frozen	1	1		1			
T779.27	NPWG-3CP2	2/16/2025	16:47	SED	Frozen	1	1		1			
T779.27	NPWG-3D2	2/16/2025	17:16	SED	Frozen	1	1		1			
T779.27	NPWG-4B2X	2/17/2025	16:05	SED	Frozen	1	1		1			
T779.27	NPWG-4C2	2/17/2025	16:50	SED	Frozen	1	1		1			
T779.27	PACPP-1C1	2/19/2025	0:48	SED	Frozen	1	1		1			
T779.27	PACPP-1C2X	2/17/2025	22:46	SED	Frozen	1	1		1			
T779.27	PACPP-1C3X	2/19/2025	1:32	SED	Frozen	1	1		1			
T779.27	PACPP-1CP1	2/18/2025	10:41	SED	Frozen	1	1		1			
T779.27	PACPP-1CP2X	2/17/2025	23:19	SED	Frozen	1	1		1			
T779.27	PACPP-1CP3	2/18/2025	11:23	SED	Frozen	1	1		1			
T779.27	PACPP-1D2	2/18/2025	21:28	SED	Frozen	1	1		1			
T779.27	PACPP-1E2	2/18/2025	20:52	SED	Frozen	1	1		1			
T779.27	PACPP-1F2	2/18/2025	20:16	SED	Frozen	1	1		1			
T779.27	PACPP-1G2	2/18/2025	19:39	SED	Frozen	1	1		1			
T779.27	PACPP-2C2	2/19/2025	2:15	SED	Frozen	1	1		1			
T779.27	PACPP-2CP2	2/18/2025	23:14	SED	Frozen	1	1		1			
T779.27	PACPP-2D2	2/18/2025	22:32	SED	Frozen	1	1		1			
T779.27	PACPP-3C1	2/19/2025	10:36	SED	Frozen	1	1		1			
T779.27	PACPP-3C2Y	2/19/2025	9:49	SED	Frozen	1	1		1			
T779.27	PACPP-3C3X	2/19/2025	9:15	SED	Frozen	1	1		1			
T779.27	PACPP-3CP1X	2/19/2025	3:00	SED	Frozen	1	1		1			
T779.27	PACPP-3CP2	2/19/2025	4:09	SED	Frozen	1	1		1			
T779.27	PACPP-3CP3	2/19/2025	4:44	SED	Frozen	1	1		1			
T779.27	PACPP-3D2X	2/19/2025	5:27	SED	Frozen	1	1		1			
T779.27	PACPP-3E2X	2/19/2025	11:22	SED	Frozen	1	1		1			
T779.27	PACPP-3F2X	2/19/2025	12:46	SED	Frozen	1	1		1			
T779.27	PACPP-3G2	2/19/2025	13:35	SED	Frozen	1	1		1			
T779.27	PACPP-4C2X	2/18/2025	3:59	SED	Frozen	1	1		1			

Relinquished by: 26 FEB 2025

Recieved by:

Relinquished by:

Recieved by: Jesse Sy (EETN) 3/6/25 10:38

2 of 12

5/5/2025

Ship To:
Lily-Anna Lacount
Eurofins Specialty Metals Testing
5755 8th St. E
Fife, WA 98424
USA

CHAIN of CUSTODY

Report to:
Dr. Ted Donn
Tetra Tech Inc.
Lafayette, CA
ted.donn@tetratech.com

Project	Sample ID	Date	Time	Medium	Preserve	Hg (EPA 1631 B)	10 Metals (As, Ba, Cd, Cr, Cu, Fe, Mn, Ni, Pb, Zn) EPA 1631 M	6 Metals (As, Ba, Cd, Cu, Pb, Zn) EPA 1631 M	Dry Weight	Hg (EPA 1631 E)	10 Metals (As, Ba, Cd, Cr, Cu, Fe, Mn, Ni, Pb, Zn) EPA 1640	6 Metals (As, Ba, Cd, Cu, Pb, Zn) EPA 1640
T779.27	PACPP-4C2X-FD	2/18/2025	4:22	SED	Frozen	1	1		1			
T779.27	PACPP-4CP2X	2/18/2025	4:56	SED	Frozen	1	1		1			
T779.27	PACPP-4D2X	2/18/2025	8:49	SED	Frozen	1	1		1			
T779.27	PAREF-A	2/13/2025	19:06	SED	Frozen	1	1		1			
T779.27	PAREF-B	2/13/2025	19:38	SED	Frozen	1	1		1			
T779.27	PAREF-C	2/13/2025	19:59	SED	Frozen	1	1		1			
T779.27	PAWB-1C2	2/20/2025	23:07	SED	Frozen	1	1		1			
T779.27	PAWB-1CP2	2/20/2025	22:25	SED	Frozen	1	1		1			
T779.27	PAWB-1D2	2/20/2025	21:40	SED	Frozen	1	1		1			
T779.27	PAWB-2B1X	2/21/2025	16:23	SED	Frozen	1	1		1			
T779.27	PAWB-2C2	2/21/2025	16:59	SED	Frozen	1	1		1			
T779.27	PAWB-3B2	2/21/2025	14:36	SED	Frozen	1	1		1			
T779.27	PAWB-3C2	2/21/2025	5:40	SED	Frozen	1	1		1			
T779.27	PAWB-3CP2	2/21/2025	4:55	SED	Frozen	1	1		1			
T779.27	PAWB-3D2	2/21/2025	4:19	SED	Frozen	1	1		1			
T779.27	PAWB-4B2X	2/21/2025	15:54	SED	Frozen	1	1		1			
T779.27	PAWB-4C2	2/21/2025	19:24	SED	Frozen	1	1		1			
T779.27	PAWE-1B1	2//20/2025	17:12	SED	Frozen	1	1		1			
T779.27	PAWE-1C2	2//20/2025	1:48	SED	Frozen	1	1		1			
T779.27	PAWE-1CP2	2//20/2025	2:23	SED	Frozen	1	1		1			
T779.27	PAWE-1D2	2//20/2025	3:08	SED	Frozen	1	1		1			
T779.27	PAWE-2B3	2//20/2025	17:56	SED	Frozen	1	1		1			
T779.27	PAWE-2C2	2//20/2025	4:25	SED	Frozen	1	1		1			
T779.27	PAWE-2C2-FD	2//20/2025	4:56	SED	Frozen	1	1		1			
T779.27	PAWE-3B3	2//20/2025	15:43	SED	Frozen	1	1		1			
T779.27	PAWE-3C2	2/20/2025	17:13	SED	Frozen	1	1		1			
T779.27	PAWE-3CP2	2/20/2025	16:47	SED	Frozen	1	1		1			
T779.27	PAWE-3D2	2/20/2025	19:49	SED	Frozen	1	1		1			
T779.27	PAWE-4B2	2/20/2025	16:25	SED	Frozen	1	1		1			
T779.27	PAWE-4C2	2/20/2025	1:09	SED	Frozen	1	1		1			
T779.27	NPCPP-1C2X-SW-1	2/16/2025	1:52	SW	Frozen					1	1	
T779.27	NPCPP-1C2X-SW-20	2/16/2025	1:58	SW	Frozen					1	1	
T779.27	NPCPP-1C2X-SW-40	2/16/2025	2:06	SW	Frozen					1	1	
T779.27	NPCPP-1C2X-SW-B	2/16/2025	2:17	SW	Frozen					1	1	
T779.27	NPCPP-1CP2-SW-1	2/15/2025	2:45	SW	Frozen					1	1	
T779.27	NPCPP-1CP2-SW-20	2/15/2025	2:51	SW	Frozen					1	1	
T779.27	NPCPP-1CP2-SW-40	2/15/2025	2:59	SW	Frozen					1	1	
T779.27	NPCPP-1CP2-SW-B	2/15/2025	1:12	SW	Frozen					1	1	
T779.27	NPCPP-2C2-SW-1	2/16/2025	0:12	SW	Frozen					1	1	
T779.27	NPCPP-2C2-SW-20	2/16/2025	0:18	SW	Frozen					1	1	
T779.27	NPCPP-2C2-SW-40	2/16/2025	0:46	SW	Frozen					1	1	
T779.27	NPCPP-2C2-SW-40-FD	2/16/2025	0:58	SW	Frozen					1	1	
T779.27	NPCPP-2C2-SW-B	2/16/2025	1:06	SW	Frozen					1	1	
T779.27	NPCPP-3C2-SW-1	2/15/2025	22:02	SW	Frozen					1	1	

Relinquished by: AM
26 FEB 2025

Recieved by:

Relinquished by:

Recieved by: Jesse Sigl (EETN)
3/6/25
18:38

3 of 12

5/5/2025

Ship To:
Lilly-Anna Lacount
Eurofins Specialty Metals Testing
5755 8th St. E
Fife, WA 98424
USA

CHAIN of CUSTODY

Report to:
Dr. Ted Donn
Tetra Tech Inc.
Lafayette, CA
ted.donn@tetratech.com

Project	Sample ID	Date	Time	Medium	Preserve	Hg (EPA 1631 B)	10 Metals (As, Ba, Cd, Cr, Cu, Fe, Mn, Ni, Pb, Zn) EPA 1631 M	6 Metals (As, Ba, Cd, Cu, Pb, Zn) EPA 1631 M	Dry Weight	Hg (EPA 1631 E)	10 Metals (As, Ba, Cd, Cr, Cu, Fe, Mn, Ni, Pb, Zn) EPA 1640	6 Metals (As, Ba, Cd, Cu, Pb, Zn) EPA 1640
T779.27	NPCPP-3C2-SW-20	2/15/2025	22:09	SW	Frozen					1	1	
T779.27	NPCPP-3C2-SW-40	2/15/2025	22:17	SW	Frozen					1	1	
T779.27	NPCPP-3C2-SW-B	2/15/2025	22:27	SW	Frozen					1	1	
T779.27	NPCPP-3CP2-SW-1	2/15/2025	15:13	SW	Frozen					1	1	
T779.27	NPCPP-3CP2-SW-20	2/15/2025	15:18	SW	Frozen					1	1	
T779.27	NPCPP-3CP2-SW-40	2/15/2025	15:26	SW	Frozen					1	1	
T779.27	NPCPP-3CP2-SW-B	2/15/2025	15:39	SW	Frozen					1	1	
T779.27	NPCPP-4C2-SW-1	2/15/2025	4:20	SW	Frozen					1	1	
T779.27	NPCPP-4C2-SW-20	2/15/2025	4:26	SW	Frozen					1	1	
T779.27	NPCPP-4C2-SW-40	2/15/2025	4:14	SW	Frozen					1	1	
T779.27	NPCPP-4C2-SW-B	2/15/2025	4:45	SW	Frozen					1	1	
T779.27	NPCPP-EQ	2/12/2025	20:00	SW	Frozen					1	1	
T779.27	NPCPP-WB	2/12/2025	20:07	SW	Frozen					1	1	
T779.27	NPREF-A-SW-1	2/12/2025	20:54	SW	Frozen					1	1	
T779.27	NPREF-A-SW-1-FD	2/12/2025	20:59	SW	Frozen					1	1	
T779.27	NPREF-A-SW-20	2/12/2025	21:05	SW	Frozen					1	1	
T779.27	NPREF-A-SW-40	2/12/2025	21:11	SW	Frozen					1	1	
T779.27	NPREF-A-SW-B	2/12/2025	21:21	SW	Frozen					1	1	
T779.27	NPREF-EQ	2/12/2025	20:07	SW	Frozen					1	1	
T779.27	NPREF-WB	2/12/2025	20:00	SW	Frozen					1	1	
T779.27	NPWB-1C2-SW-1	2/14/2025	0:47	SW	Frozen					1	1	
T779.27	NPWB-1C2-SW-20	2/14/2025	0:14	SW	Frozen					1	1	
T779.27	NPWB-1C2-SW-40	2/14/2025	1:02	SW	Frozen					1	1	
T779.27	NPWB-1C2-SW-B	2/14/2025	1:11	SW	Frozen					1	1	
T779.27	NPWB-1CP2-SW-1	2/14/2025	1:51	SW	Frozen					1	1	
T779.27	NPWB-1CP2-SW-20	2/14/2025	1:57	SW	Frozen					1	1	
T779.27	NPWB-1CP2-SW-40	2/14/2025	2:09	SW	Frozen					1	1	
T779.27	NPWB-1CP2-SW-B	2/14/2025	2:20	SW	Frozen					1	1	
T779.27	NPWB-3B2-SW-1	2/14/2025	13:52	SW	Frozen					1	1	
T779.27	NPWB-3B2-SW-20	2/14/2025	13:57	SW	Frozen					1	1	
T779.27	NPWB-3B2-SW-40	2/14/2025	16:08	SW	Frozen					1	1	
T779.27	NPWB-3B2-SW-B	2/14/2025	16:18	SW	Frozen					1	1	
T779.27	NPWB-3CP2-SW-1	2/14/2025	14:11	SW	Frozen					1	1	
T779.27	NPWB-3CP2-SW-20	2/14/2025	14:19	SW	Frozen					1	1	
T779.27	NPWB-3CP2-SW-20-FD	2/14/2025	14:45	SW	Frozen					1	1	
T779.27	NPWB-3CP2-SW-40	2/14/2025	14:51	SW	Frozen					1	1	
T779.27	NPWB-3CP2-SW-B	2/14/2025	13:02	SW	Frozen					1	1	
T779.27	NPWB-EQ	2/14/2025	0:15	SW	Frozen					1	1	
T779.27	NPWB-WB	2/14/2025	0:10	SW	Frozen					1	1	
T779.27	NPWG-1B2X-SW-1	2/17/2025	0:58	SW	Frozen					1	1	
T779.27	NPWG-1B2X-SW-20	2/17/2025	1:01	SW	Frozen					1	1	
T779.27	NPWG-1B2X-SW-40	2/17/2025	1:12	SW	Frozen					1	1	
T779.27	NPWG-1B2X-SW-B	2/17/2025	1:22	SW	Frozen					1	1	
T779.27	NPWG-1CP2-SW-1	2/17/2025	2:01	SW	Frozen					1	1	

Relinquished by: [illegible]
26 FEB 2025

Recieved by:

Relinquished by:

Recieved by: Jesse Sigl (ETN)
3/6/25
1030

4 of 12

Ship To:
Lilly-Anna Lacount
Eurofins Specialty Metals Testing
5755 8th St. E
Fife, WA 98424
USA

CHAIN of CUSTODY

Report to:
Dr. Ted Donn
Tetra Tech Inc.
Lafayette, CA
ted.donn@tetratech.com

Project	Sample ID	Date	Time	Medium	Preserve	Hg (EPA 1631 B)	10 Metals (As, Ba, Cd, Cr, Cu, Fe, Mn, Ni, Pb, Zn) EPA 1631 M	6 Metals (As, Ba, Cd, Cu, Pb, Zn) EPA 1631 M	Dry Weight	Hg (EPA 1631 E)	10 Metals (As, Ba, Cd, Cr, Cu, Fe, Mn, Ni, Pb, Zn) EPA 1640	6 Metals (As, Ba, Cd, Cu, Pb, Zn) EPA 1640
T779.27	NPWG-1CP2-SW-20	2/17/2025	2:10	SW	Frozen					1	1	
T779.27	NPWG-1CP2-SW-40	2/17/2025	2:18	SW	Frozen					1	1	
T779.27	NPWG-1CP2-SW-B	2/17/2025	2:29	SW	Frozen					1	1	
T779.27	NPWG-3B2X-SW-1	2/16/2025	20:10	SW	Frozen					1	1	
T779.27	NPWG-3B2X-SW-20	2/16/2025	20:16	SW	Frozen					1	1	
T779.27	NPWG-3B2X-SW-40	2/16/2025	20:41	SW	Frozen					1	1	
T779.27	NPWG-3B2X-SW-B	2/16/2025	20:51	SW	Frozen					1	1	
T779.27	NPWG-3B2X-SW-B-FD	2/16/2025	21:04	SW	Frozen					1	1	
T779.27	NPWG-3CP2-SW-1	2/16/2025	19:16	SW	Frozen					1	1	
T779.27	NPWG-3CP2-SW-20	2/16/2025	19:22	SW	Frozen					1	1	
T779.27	NPWG-3CP2-SW-40	2/16/2025	19:10	SW	Frozen					1	1	
T779.27	NPWG-3CP2-SW-B	2/16/2025	19:40	SW	Frozen					1	1	
T779.27	NPWG-EQ	2/16/2025	19:06	SW	Frozen					1	1	
T779.27	NPWG-WB	2/16/2025	19:00	SW	Frozen					1	1	
T779.27	PACPP-1C2X-SW-1	2/17/2025	20:01	SW	Frozen					1	1	
T779.27	PACPP-1C2X-SW-20	2/17/2025	20:07	SW	Frozen					1	1	
T779.27	PACPP-1C2X-SW-40	2/17/2025	20:14	SW	Frozen					1	1	
T779.27	PACPP-1C2X-SW-B	2/17/2025	20:24	SW	Frozen					1	1	
T779.27	PACPP-1CP2X-SW-1	2/17/2025	21:01	SW	Frozen					1	1	
T779.27	PACPP-1CP2X-SW-20	2/17/2025	21:11	SW	Frozen					1	1	
T779.27	PACPP-1CP2X-SW-40	2/17/2025	21:19	SW	Frozen					1	1	
T779.27	PACPP-1CP2X-SW-B	2/17/2025	21:29	SW	Frozen					1	1	
T779.27	PACPP-2C2-SW-1	2/18/2025	17:05	SW	Frozen					1	1	
T779.27	PACPP-2C2-SW-20	2/18/2025	17:11	SW	Frozen					1	1	
T779.27	PACPP-2C2-SW-40	2/18/2025	17:19	SW	Frozen					1	1	
T779.27	PACPP-2C2-SW-B	2/18/2025	17:09	SW	Frozen					1	1	
T779.27	PACPP-3C2Y-SW-1	2/18/2025	0:59	SW	Frozen					1	1	
T779.27	PACPP-3C2Y-SW-20	2/18/2025	1:06	SW	Frozen					1	1	
T779.27	PACPP-3C2Y-SW-40	2/18/2025	1:15	SW	Frozen					1	1	
T779.27	PACPP-3C2Y-SW-B	2/18/2025	1:25	SW	Frozen					1	1	
T779.27	PACPP-3CP2-SW-1	2/18/2025	2:07	SW	Frozen					1	1	
T779.27	PACPP-3CP2-SW-20	2/18/2025	2:17	SW	Frozen					1	1	
T779.27	PACPP-3CP2-SW-40	2/18/2025	2:25	SW	Frozen					1	1	
T779.27	PACPP-3CP2-SW-B	2/18/2025	2:36	SW	Frozen					1	1	
T779.27	PACPP-4C2-SW-1	2/18/2025	13:47	SW	Frozen					1	1	
T779.27	PACPP-4C2-SW-1-FD	2/18/2025	13:52	SW	Frozen					1	1	
T779.27	PACPP-4C2-SW-20	2/18/2025	13:58	SW	Frozen					1	1	
T779.27	PACPP-4C2-SW-40	2/18/2025	16:06	SW	Frozen					1	1	
T779.27	PACPP-4C2-SW-B	2/18/2025	16:16	SW	Frozen					1	1	
T779.27	PACPP-EQ	2/17/2025	19:07	SW	Frozen					1	1	
T779.27	PACPP-WB	2/17/2025	19:02	SW	Frozen					1	1	
T779.27	PAREF-A-SW-1	2/11/2025	16:21	SW	Frozen					1	1	
T779.27	PAREF-A-SW-20	2/11/2025	16:11	SW	Frozen					1	1	
T779.27	PAREF-A-SW-40	2/11/2025	16:41	SW	Frozen					1	1	

Relinquished by:

26 FEB 2025

Recieved by:

Relinquished by:

Recieved by: Jesse Singh (ETW)
3/6/25
12:38

5 of 12

Ship To:
Lilly-Anna Lacount
Eurofins Specialty Metals Testing
5755 8th St. E
Fife, WA 98424
USA

CHAIN of CUSTODY

Report to:
Dr. Ted Donn
Tetra Tech Inc.
Lafayette, CA
ted.donn@tetratech.com

Project	Sample ID	Date	Time	Medium	Preserve	Hg (EPA 1631 B)	10 Metals (As, Ba, Cd, Cr, Cu, Fe, Mn, Ni, Pb, Zn) EPA 1631 M	6 Metals (As, Ba, Cd, Cu, Pb, Zn) EPA 1631 M	Dry Weight	Hg (EPA 1631 E)	10 Metals (As, Ba, Cd, Cr, Cu, Fe, Mn, Ni, Pb, Zn) EPA 1640	6 Metals (As, Ba, Cd, Cu, Pb, Zn) EPA 1640
T779.27	PAREF-A-SW-B	2/11/2025	16:51	SW	Frozen					1	1	
T779.27	PAWB-1CP2-SW-1	2/21/2025	0:41	SW	Frozen					1	1	
T779.27	PAWB-1CP2-SW-20	2/21/2025	0:50	SW	Frozen					1	1	
T779.27	PAWB-1CP2-SW-40	2/21/2025	0:58	SW	Frozen					1	1	
T779.27	PAWB-1CP2-SW-B	2/21/2025	1:11	SW	Frozen					1	1	
T779.27	PAWB-3B2-SW-1	2/21/2025	13:45	SW	Frozen					1	1	
T779.27	PAWB-3B2-SW-20	2/21/2025	13:51	SW	Frozen					1	1	
T779.27	PAWB-3B2-SW-40	2/21/2025	13:59	SW	Frozen					1	1	
T779.27	PAWB-3B2-SW-B	2/21/2025	14:09	SW	Frozen					1	1	
T779.27	PAWB-3CP2-SW-1	2/21/2025	2:18	SW	Frozen					1	1	
T779.27	PAWB-3CP2-SW-20	2/21/2025	2:25	SW	Frozen					1	1	
T779.27	PAWB-3CP2-SW-40	2/21/2025	2:14	SW	Frozen					1	1	
T779.27	PAWB-3CP2-SW-B	2/21/2025	2:49	SW	Frozen					1	1	
T779.27	PAWE-1B1-SW-1	2//20/2025	14:05	SW	Frozen					1	1	
T779.27	PAWE-1B1-SW-20	2//20/2025	14:11	SW	Frozen					1	1	
T779.27	PAWE-1B1-SW-40	2//20/2025	14:19	SW	Frozen					1	1	
T779.27	PAWE-1B1-SW-B	2//20/2025	14:29	SW	Frozen					1	1	
T779.27	PAWE-1CP2-SW-1	2/19/2025	21:11	SW	Frozen					1	1	
T779.27	PAWE-1CP2-SW-20	2/19/2025	21:16	SW	Frozen					1	1	
T779.27	PAWE-1CP2-SW-40	2/19/2025	21:27	SW	Frozen					1	1	
T779.27	PAWE-1CP2-SW-B	2/19/2025	21:17	SW	Frozen					1	1	
T779.27	PAWE-3B3-SW-1	2//20/2025	12:55	SW	Frozen					1	1	
T779.27	PAWE-3B3-SW-20	2//20/2025	13:01	SW	Frozen					1	1	
T779.27	PAWE-3B3-SW-40	2//20/2025	13:14	SW	Frozen					1	1	
T779.27	PAWE-3B3-SW-B	2//20/2025	13:24	SW	Frozen					1	1	
T779.27	PAWE-3CP2-SW-1	2/19/2025	19:28	SW	Frozen					1	1	
T779.27	PAWE-3CP2-SW-20	2/19/2025	19:14	SW	Frozen					1	1	
T779.27	PAWE-3CP2-SW-20-FD	2/19/2025	19:41	SW	Frozen					1	1	
T779.27	PAWE-3CP2-SW-40	2/19/2025	19:48	SW	Frozen					1	1	
T779.27	PAWE-3CP2-SW-B	2/19/2025	19:58	SW	Frozen					1	1	
T779.27	PAWE-EQ	2/19/2025	19:06	SW	Frozen					1	1	
T779.27	PAWE-WB	2/19/2025	19:00	SW	Frozen					1	1	
T779.28	MGWA-1B2Y	2/4/2025	13:36	SED	Frozen	1	1		1			
T779.28	MGWA-1C2	2/4/2025	5:24	SED	Frozen	1	1		1			
T779.28	MGWA-1CP2	2/4/2025	3:52	SED	Frozen	1	1		1			
T779.28	MGWA-1D2	2/4/2025	4:31	SED	Frozen	1	1		1			
T779.28	MGWA-2B2X	2/4/2025	14:19	SED	Frozen	1	1		1			
T779.28	MGWA-2B2X-FD	2/4/2025	14:38	SED	Frozen	1	1		1			
T779.28	MGWA-2C2	2/4/2025	15:06	SED	Frozen	1	1		1			
T779.28	MGWA-3B2X	2/3/2025	20:31	SED	Frozen	1	1		1			
T779.28	MGWA-3C2	2/3/2025	21:24	SED	Frozen	1	1		1			
T779.28	MGWA-3CP2	2/3/2025	22:10	SED	Frozen	1	1		1			
T779.28	MGWA-3D2	2/3/2025	22:49	SED	Frozen	1	1		1			

Relinquished by: [signature]
26 FEB 2025

Recieved by:

Relinquished by:

Recieved by: Jesse Sayk (EETN)
3/6/25
10:38

6 of 12

Ship To:
Lilly-Anna Lacount
Eurofins Specialty Metals Testing
5755 8th St. E
Fife, WA 98424
USA

CHAIN of CUSTODY

Report to:
Dr. Ted Donn
Tetra Tech Inc.
Lafayette, CA
ted.donn@tetratech.com

Project	Sample ID	Date	Time	Medium	Preserve	Hg (EPA 1631 B)	10 Metals (As, Ba, Cd, Cr, Cu, Fe, Mn, Ni, Pb, Zn) EPA 1631 M	6 Metals (As, Ba, Cd, Cu, Pb, Zn) EPA 1631 M	Dry Weight	Hg (EPA 1631 E)	10 Metals (As, Ba, Cd, Cr, Cu, Fe, Mn, Ni, Pb, Zn) EPA 1640	6 Metals (As, Ba, Cd, Cu, Pb, Zn) EPA 1640
T779.28	MGWA-4B2X	2/4/2025	12:44	SED	Frozen	1	1		1			
T779.28	MGWA-4C2	2/3/2025	23:24	SED	Frozen	1	1		1			
T779.28	MGWA-1B2Y-SW-1	2/4/2025	0:46	SW	Frozen					1	1	
T779.28	MGWA-1B2Y-SW-20	2/4/2025	0:52	SW	Frozen					1	1	
T779.28	MGWA-1B2Y-SW-40	2/4/2025	1:01	SW	Frozen					1	1	
T779.28	MGWA-1B2Y-SW-B	2/4/2025	1:13	SW	Frozen					1	1	
T779.28	MGWA-1CP2-SW-1	2/4/2025	2:04	SW	Frozen					1	1	
T779.28	MGWA-1CP2-SW-20	2/4/2025	2:14	SW	Frozen					1	1	
T779.28	MGWA-1CP2-SW-40	2/4/2025	2:22	SW	Frozen					1	1	
T779.28	MGWA-1CP2-SW-B	2/4/2025	2:35	SW	Frozen					1	1	
T779.28	MGWA-3B2X-SW-1	2/1/2025	19:21	SW	Frozen					1	1	
T779.28	MGWA-3B2X-SW-20	2/1/2025	19:14	SW	Frozen					1	1	
T779.28	MGWA-3B2X-SW-40	2/1/2025	19:41	SW	Frozen					1	1	
T779.28	MGWA-3B2X-SW-B	2/1/2025	19:51	SW	Frozen					1	1	
T779.28	MGWA-3CP2-SW-1	2/1/2025	16:21	SW	Frozen					1	1	
T779.28	MGWA-3CP2-SW-20	2/1/2025	16:11	SW	Frozen					1	1	
T779.28	MGWA-3CP2-SW-40	2/1/2025	16:19	SW	Frozen					1	1	
T779.28	MGWA-3CP2-SW-40-FD	2/1/2025	16:48	SW	Frozen					1	1	
T779.28	MGWA-3CP2-SW-B	2/1/2025	16:59	SW	Frozen					1	1	
T779.28	MGWA-EQ	2/3/2025	7:45	SW	Frozen					1	1	
T779.28	MGWA-WB	2/3/2025	7:40	SW	Frozen					1	1	
T779.31-B	BAPLH-M1	2/22/2025	2:03	SED	Frozen			1	1			
T779.31-B	BAPLH-M2	2/22/2025	2:36	SED	Frozen			1	1			
T779.31-B	BAPLH-M3	2/22/2025	4:45	SED	Frozen			1	1			
T779.31-B	BAPLH-M4	2/22/2025	6:33	SED	Frozen			1	1			
T779.31-B	BAPLH-M5	2/22/2025	8:09	SED	Frozen			1	1			
T779.31-B	BAPLH-M6	2/22/2025	8:35	SED	Frozen			1	1			
T779.31-B	BAPLH-N1	2/22/2025	9:18	SED	Frozen			1	1			
T779.31-B	BAPLH-N2	2/22/2025	9:50	SED	Frozen			1	1			
T779.31-B	BAPLH-S1	2/22/2025	0:42	SED	Frozen			1	1			
T779.31-B	BAPLH-S2	2/22/2025	1:18	SED	Frozen			1	1			
T779.31-B	PDPLB-M1	2/11/2025	22:54	SED	Frozen			1	1			
T779.31-B	PDPLB-M2	2/11/2025	22:41	SED	Frozen			1	1			
T779.31-B	PDPLB-M3	2/11/2025	20:17	SED	Frozen			1	1			
T779.31-B	PDPLB-M4	2/11/2025	20:36	SED	Frozen			1	1			
T779.31-B	PDPLB-N1	2/11/2025	17:17	SED	Frozen			1	1			
T779.31-B	PDPLB-N2	2/11/2025	17:36	SED	Frozen			1	1			
T779.31-B	PDPLB-S1	2/12/2025	2:10	SED	Frozen			1	1			
T779.31-B	PDPLB-S2	2/12/2025	1:53	SED	Frozen			1	1			
T779.31-B	PMWH-1B2X-C1	2/10/2025	22:26	SED	Frozen			1	1			
T779.31-B	PMWH-1B2X-C2	2/10/2025	22:35	SED	Frozen			1	1			
T779.31-B	PMWH-1B2X-C3	2/10/2025	22:43	SED	Frozen			1	1			
T779.31-B	PMWH-1B2X-X-(0-5)	2/11/2025	8:41	SED	Frozen			1	1			

Relinquished by: 26 FEB 2025

Relinquished by:

Recieved by:

Recieved by: Jesse Singh (EETN) 3/6/25 10:38

7 of 12

Ship To:
Lilly-Anna Lacount
Eurofins Specialty Metals Testing
5755 8th St. E
Fife, WA 98424
USA

CHAIN of CUSTODY

Report to:
Dr. Ted Donn
Tetra Tech Inc.
Lafayette, CA
ted.donn@tetratech.com

Project	Sample ID	Date	Time	Medium	Preserve	Hg (EPA 1631 B)	10 Metals (As, Ba, Cd, Cr, Cu, Fe, Mn, Ni, Pb, Zn) EPA 1631 M	6 Metals (As, Ba, Cd, Cu, Pb, Zn) EPA 1631 M	Dry Weight	Hg (EPA 1631 E)	10 Metals (As, Ba, Cd, Cr, Cu, Fe, Mn, Ni, Pb, Zn) EPA 1640	6 Metals (As, Ba, Cd, Cu, Pb, Zn) EPA 1640
T779.31-B	PMWH-1B2X-X-(10-15)	2/11/2025	8:41	SED	Frozen			1	1			
T779.31-B	PMWH-1B2X-X-(15-20)	2/11/2025	8:41	SED	Frozen			1	1			
T779.31-B	PMWH-1B2X-X-(5-10)	2/11/2025	8:41	SED	Frozen			1	1			
T779.31-B	PMWH-1C2-C1	2/10/2025	21:54	SED	Frozen			1	1			
T779.31-B	PMWH-1C2-C2	2/10/2025	22:02	SED	Frozen			1	1			
T779.31-B	PMWH-1C2-C3	2/10/2025	22:11	SED	Frozen			1	1			
T779.31-B	PMWH-1D2-C1	2/10/2025	21:13	SED	Frozen			1	1			
T779.31-B	PMWH-1D2-C2	2/10/2025	21:22	SED	Frozen			1	1			
T779.31-B	PMWH-1D2-C3	2/10/2025	21:30	SED	Frozen			1	1			
T779.31-B	PMWH-2B2X-C1	2/10/2025	22:59	SED	Frozen			1	1			
T779.31-B	PMWH-2B2X-C2	2/10/2025	23:08	SED	Frozen			1	1			
T779.31-B	PMWH-2B2X-C3	2/10/2025	23:16	SED	Frozen			1	1			
T779.31-B	PMWH-2B2X-X-(0-5)	2/11/2025	8:14	SED	Frozen			1	1			
T779.31-B	PMWH-2B2X-X-(10-15)	2/11/2025	8:14	SED	Frozen			1	1			
T779.31-B	PMWH-2B2X-X-(15-20)	2/11/2025	8:14	SED	Frozen			1	1			
T779.31-B	PMWH-2B2X-X-(20-25)	2/11/2025	8:14	SED	Frozen			1	1			
T779.31-B	PMWH-2B2X-X-(5-10)	2/11/2025	8:14	SED	Frozen			1	1			
T779.31-B	PMWH-2C2-C1	2/11/2025	1:57	SED	Frozen			1	1			
T779.31-B	PMWH-2C2-C2	2/11/2025	2:07	SED	Frozen			1	1			
T779.31-B	PMWH-2C2-C3	2/11/2025	2:17	SED	Frozen			1	1			
T779.31-B	PMWH-3B2X-C1	2/10/2025	20:16	SED	Frozen			1	1			
T779.31-B	PMWH-3B2X-C2	2/10/2025	20:25	SED	Frozen			1	1			
T779.31-B	PMWH-3B2X-C3	2/10/2025	20:33	SED	Frozen			1	1			
T779.31-B	PMWH-3B2X-X-(0-5)	2/11/2025	7:45	SED	Frozen			1	1			
T779.31-B	PMWH-3B2X-X-(10-15)	2/11/2025	7:45	SED	Frozen			1	1			
T779.31-B	PMWH-3B2X-X-(15-20)	2/11/2025	7:45	SED	Frozen			1	1			
T779.31-B	PMWH-3B2X-X-(5-10)	2/11/2025	7:45	SED	Frozen			1	1			
T779.31-B	PMWH-3C2-C1	2/11/2025	2:46	SED	Frozen			1	1			
T779.31-B	PMWH-3C2-C2	2/11/2025	2:56	SED	Frozen			1	1			
T779.31-B	PMWH-3C2-C3	2/11/2025	3:05	SED	Frozen			1	1			
T779.31-B	PMWH-3D2-C1	2/11/2025	3:52	SED	Frozen			1	1			
T779.31-B	PMWH-3D2-C2	2/11/2025	4:03	SED	Frozen			1	1			
T779.31-B	PMWH-3D2-C3	2/11/2025	4:12	SED	Frozen			1	1			
T779.31-B	PMWH-4B3X-(0-5)	2/11/2025	19:14	SED	Frozen			1	1			
T779.31-B	PMWH-4B3X-(10-15)	2/11/2025	19:14	SED	Frozen			1	1			
T779.31-B	PMWH-4B3X-(15-20)	2/11/2025	19:14	SED	Frozen			1	1			
T779.31-B	PMWH-4B3X-(20-25)	2/11/2025	19:14	SED	Frozen			1	1			
T779.31-B	PMWH-4B3X-(5-10)	2/11/2025	19:14	SED	Frozen			1	1			
T779.31-B	PMWH-4B3X-C1	2/11/2025	9:47	SED	Frozen			1	1			
T779.31-B	PMWH-4B3X-C2	2/11/2025	9:38	SED	Frozen			1	1			
T779.31-B	PMWH-4B3X-C3	2/11/2025	9:29	SED	Frozen			1	1			
T779.31-B	PMWH-4C2-C1	2/11/2025	4:49	SED	Frozen			1	1			
T779.31-B	PMWH-4C2-C2	2/11/2025	4:59	SED	Frozen			1	1			
T779.31-B	PMWH-4C2-C3	2/11/2025	5:09	SED	Frozen			1	1			

Relinquished by: 26 FEB 2025

Relinquished by:

Recieved by:

Recieved by: Jesse Sagl (ETN) 3/6/25 10:38

8 of 12

5/5/2025

Ship To:
Lilly-Anna Lacount
Eurofins Specialty Metals Testing
5755 8th St. E
Fife, WA 98424
USA

CHAIN of CUSTODY

Report to:
Dr. Ted Donn
Tetra Tech Inc.
Lafayette, CA
ted.donn@tetratech.com

Project	Sample ID	Date	Time	Medium	Preserve	Hg (EPA 1631 B)	10 Metals (As, Ba, Cd, Cr, Cu, Fe, Mn, Ni, Pb, Zn) EPA 1631 M	6 Metals (As, Ba, Cd, Cu, Pb, Zn) EPA 1631 M	Dry Weight	Hg (EPA 1631 E)	10 Metals (As, Ba, Cd, Cr, Cu, Fe, Mn, Ni, Pb, Zn) EPA 1640	6 Metals (As, Ba, Cd, Cu, Pb, Zn) EPA 1640
T779.31-B	PMWH-Center-C1	2/11/2025	5:34	SED	Frozen			1	1			
T779.31-B	PMWH-Center-C2	2/11/2025	5:48	SED	Frozen			1	1			
T779.31-B	PMWH-Center-C3	2/11/2025	5:57	SED	Frozen			1	1			
T779.31-B	PMWH-Center-X-(0-5)	2/11/2025	6:12	SED	Frozen			1	1			
T779.31-B	PMWH-Center-X-(10-15)	2/11/2025	6:12	SED	Frozen			1	1			
T779.31-B	PMWH-Center-X-(15-20)	2/11/2025	6:12	SED	Frozen			1	1			
T779.31-B	PMWH-Center-X-(5-10)	2/11/2025	6:12	SED	Frozen			1	1			
T779.31-B	SAREF-A	2/11/2025	14:52	SED	Frozen			1	1			
T779.31-B	SAREF-B	2/11/2025	15:19	SED	Frozen			1	1			
T779.31-B	SAREF-C	2/11/2025	15:45	SED	Frozen			1	1			
T779.31-B	STPLB-M1	2/23/2025	2:31	SED	Frozen			1	1			
T779.31-B	STPLB-M2	2/23/2025	2:09	SED	Frozen			1	1			
T779.31-B	STPLB-M3	2/23/2025	6:31	SED	Frozen			1	1			
T779.31-B	STPLB-M4	2/23/2025	8:42	SED	Frozen			1	1			
T779.31-B	STPLB-N1	2/23/2025	9:20	SED	Frozen			1	1			
T779.31-B	STPLB-N2	2/23/2025	9:42	SED	Frozen			1	1			
T779.31-B	STPLB-S1	2/23/2025	0:53	SED	Frozen			1	1			
T779.31-B	STPLB-S2	2/23/2025	1:21	SED	Frozen			1	1			
T779.31-B	TRXLA-E1	2/23/2025	17:33	SED	Frozen			1	1			
T779.31-B	TRXLA-E2	2/23/2025	17:49	SED	Frozen			1	1			
T779.31-B	TRXLA-M1	2/23/2025	15:12	SED	Frozen			1	1			
T779.31-B	TRXLA-M2	2/23/2025	16:51	SED	Frozen			1	1			
T779.31-B	TRXLA-W1	2/23/2025	12:47	SED	Frozen			1	1			
T779.31-B	TRXLA-W1-FD	2/23/2025	12:36	SED	Frozen			1	1			
T779.31-B	TRXLA-W2	2/23/2025	13:16	SED	Frozen			1	1			
T779.31-B	BAPLH-M3-SW-1	2/22/2025	3:35	SW	Frozen					1		1
T779.31-B	BAPLH-M3-SW-20	2/22/2025	3:41	SW	Frozen					1		1
T779.31-B	BAPLH-M3-SW-40	2/22/2025	3:49	SW	Frozen					1		1
T779.31-B	BAPLH-M3-SW-B	2/22/2025	4:01	SW	Frozen					1		1
T779.31-B	BAPLH-M4-SW-1	2/22/2025	5:19	SW	Frozen					1		1
T779.31-B	BAPLH-M4-SW-1-FD	2/22/2025	5:24	SW	Frozen					1		1
T779.31-B	BAPLH-M4-SW-20	2/22/2025	5:30	SW	Frozen					1		1
T779.31-B	BAPLH-M4-SW-40	2/22/2025	5:38	SW	Frozen					1		1
T779.31-B	BAPLH-M4-SW-B	2/22/2025	5:49	SW	Frozen					1		1
T779.31-B	PDPLB-EQ	2/11/2025	19:07	SW	Frozen					1		1
T779.31-B	PDPLB-M2-SW-1	2/11/2025	21:36	SW	Frozen					1		1
T779.31-B	PDPLB-M2-SW-20	2/11/2025	21:30	SW	Frozen					1		1
T779.31-B	PDPLB-M2-SW-40	2/11/2025	21:20	SW	Frozen					1		1
T779.31-B	PDPLB-M2-SW-B	2/11/2025	21:10	SW	Frozen					1		1
T779.31-B	PDPLB-M3-SW-1	2/11/2025	19:16	SW	Frozen					1		1
T779.31-B	PDPLB-M3-SW-20	2/11/2025	19:22	SW	Frozen					1		1
T779.31-B	PDPLB-M3-SW-40	2/11/2025	19:29	SW	Frozen					1		1
T779.31-B	PDPLB-M3-SW-B	2/11/2025	19:40	SW	Frozen					1		1
T779.31-B	PDPLB-WB	2/11/2025	19:00	SW	Frozen					1		1

Relinquished by: 26 FEB 2025

Recieved by:

Relinquished by:

Recieved by: Jesse Smith (ETN) 3/6/25 18:38

9 of 12

Ship To:
Liliy-Anna Lacount
Eurofins Specialty Metals Testing
5755 8th St. E
Fife, WA 98424
USA

CHAIN of CUSTODY

Report to:
Dr. Ted Donn
Tetra Tech Inc.
Lafayette, CA
ted.donn@tetratech.com

Project	Sample ID	Date	Time	Medium	Preserve	Hg (EPA 1631 B)	10 Metals (As, Ba, Cd, Cr, Cu, Fe, Mn, Ni, Pb, Zn) EPA 1631 M	6 Metals (As, Ba, Cd, Cu, Pb, Zn) EPA 1631 M	Dry Weight	Hg (EPA 1631 E)	10 Metals (As, Ba, Cd, Cr, Cu, Fe, Mn, Ni, Pb, Zn) EPA 1640	6 Metals (As, Ba, Cd, Cu, Pb, Zn) EPA 1640
T779.31-B	PMWH-1B2X-SW-1	2/11/2025	0:27	SW	Frozen					1		1
T779.31-B	PMWH-1B2X-SW-20	2/11/2025	0:34	SW	Frozen					1		1
T779.31-B	PMWH-1B2X-SW-40	2/11/2025	0:42	SW	Frozen					1		1
T779.31-B	PMWH-1B2X-SW-B	2/11/2025	0:53	SW	Frozen					1		1
T779.31-B	PMWH-1B2X-SW-B-FD	2/11/2025	1:06	SW	Frozen					1		1
T779.31-B	PMWH-3B2X-SW-1	2/10/2025	19:11	SW	Frozen					1		1
T779.31-B	PMWH-3B2X-SW-20	2/10/2025	19:17	SW	Frozen					1		1
T779.31-B	PMWH-3B2X-SW-40	2/10/2025	19:24	SW	Frozen					1		1
T779.31-B	PMWH-3B2X-SW-B	2/10/2025	19:35	SW	Frozen					1		1
T779.31-B	PMWH-Center-SW-1	2/10/2025	18:01	SW	Frozen					1		1
T779.31-B	PMWH-Center-SW-20	2/10/2025	18:06	SW	Frozen					1		1
T779.31-B	PMWH-Center-SW-40	2/10/2025	18:14	SW	Frozen					1		1
T779.31-B	PMWH-Center-SW-B	2/10/2025	18:27	SW	Frozen					1		1
T779.31-B	PMWH-EQ	2/10/2025	16:06	SW	Frozen					1		1
T779.31-B	PMWH-WB	2/10/2025	16:00	SW	Frozen					1		1
T779.31-B	SAREF-A-SW-1	2/11/2025	13:44	SW	Frozen					1		1
T779.31-B	SAREF-A-SW-20	2/11/2025	13:50	SW	Frozen					1		1
T779.31-B	SAREF-A-SW-40	2/11/2025	13:58	SW	Frozen					1		1
T779.31-B	SAREF-A-SW-B	2/11/2025	14:12	SW	Frozen					1		1
T779.31-B	STPLB-M2-SW-1	2/23/2025	3:32	SW	Frozen					1		1
T779.31-B	STPLB-M2-SW-20	2/23/2025	3:39	SW	Frozen					1		1
T779.31-B	STPLB-M2-SW-20-FD	2/23/2025	3:46	SW	Frozen					1		1
T779.31-B	STPLB-M2-SW-40	2/23/2025	3:55	SW	Frozen					1		1
T779.31-B	STPLB-M2-SW-B	2/23/2025	4:10	SW	Frozen					1		1
T779.31-B	STPLB-M3-SW-1	2/23/2025	5:14	SW	Frozen					1		1
T779.31-B	STPLB-M3-SW-20	2/23/2025	5:20	SW	Frozen					1		1
T779.31-B	STPLB-M3-SW-40	2/23/2025	5:23	SW	Frozen					1		1
T779.31-B	STPLB-M3-SW-B	2/23/2025	15:44	SW	Frozen					1		1
T779.31-B	TRXLA-EQ	2/23/2025	12:14	SW	Frozen					1		1
T779.31-B	TRXLA-M1-SW-1	2/23/2025	13:55	SW	Frozen					1		1
T779.31-B	TRXLA-M1-SW-20	2/23/2025	14:00	SW	Frozen					1		1
T779.31-B	TRXLA-M1-SW-40	2/23/2025	14:08	SW	Frozen					1		1
T779.31-B	TRXLA-M1-SW-B	2/23/2025	14:19	SW	Frozen					1		1
T779.31-B	TRXLA-M2-SW-1	2/23/2025	15:44	SW	Frozen					1		1
T779.31-B	TRXLA-M2-SW-20	2/23/2025	15:51	SW	Frozen					1		1
T779.31-B	TRXLA-M2-SW-20-FD	2/23/2025	15:57	SW	Frozen					1		1
T779.31-B	TRXLA-M2-SW-40	2/23/2025	16:05	SW	Frozen					1		1
T779.31-B	TRXLA-M2-SW-B	2/23/2025	16:17	SW	Frozen					1		1
T779.31-B	TRXLA-WB	2/23/2025	12:07	SW	Frozen					1		1
T779.32	ERPLG/ERXLG-M1	2/12/2025	10:43	SED	Frozen			1	1			
T779.32	ERPLG/ERXLG-M2	2/12/2025	10:23	SED	Frozen			1	1			
T779.32	ERPLG/ERXLG-N1	2/12/2025	8:21	SED	Frozen			1	1			
T779.32	ERPLG/ERXLG-N1-FD	2/12/2025	8:30	SED	Frozen			1	1			

Relinquished by:

26 FEB 2025

Recieved by:

Relinquished by:

Recieved by: Jesse Singh (ETN)
3/6/25
12:38

10 of 12